Service Manual

LL30002 Rev. 7/03

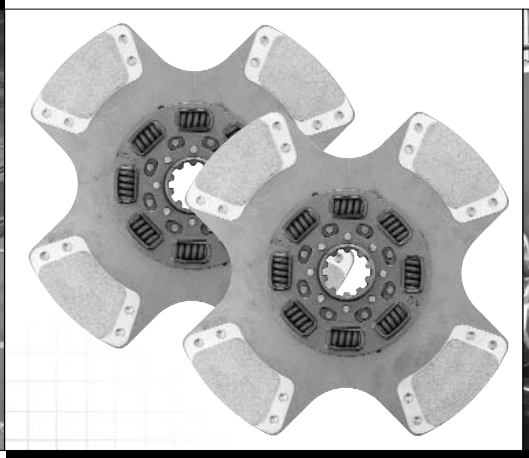

HEAVY DUTY PUSH/PULL TYPE CLUTCHES

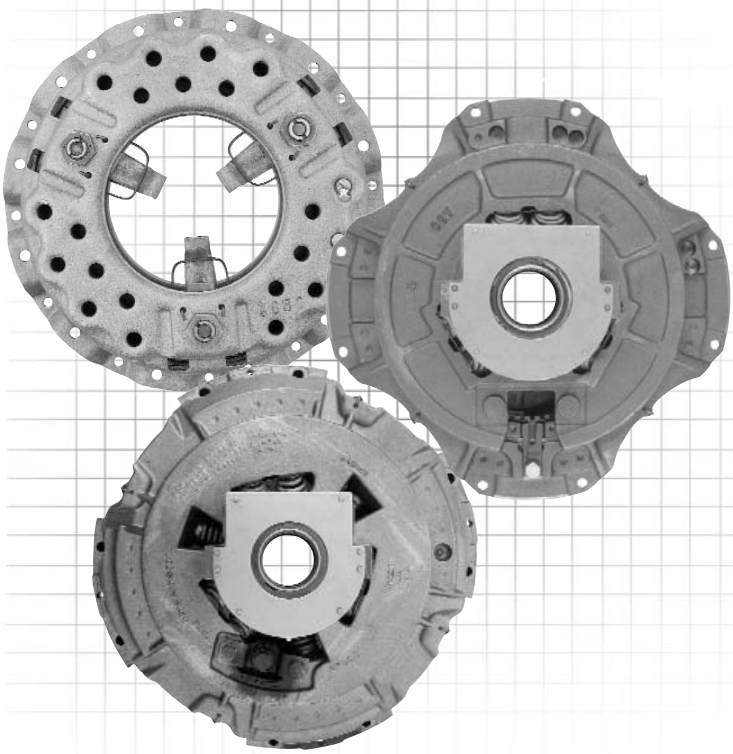

www.haldex.com

Table of Contents

Section One - Push Type Clutches

Clutch Assembly Cutaway Detail 1
Clutch Construction and Operation 2
Single Plate Clutch Installation and Flywheel Preparation 2
Checking for Flywheel Misalignment 3
Two-Plate Clutch Installation 4,5
Dimension “A” 5
Clutch Linkage Adjustment 6
Clutch Linkage Requirements 6
Dimension “A”/Flywheel Specifications 7
Common Service Problems 8

Section Two - Pull Type Clutches

Clutch Assembly Cutaway Detail 9
Clutch Construction and Operation 10
Clutch Installation and Flywheel Preparation 10
Single Plate Clutch Installation 11
Two Plate with Adapter Ring Clutch Installation 11
Two Plate with Strap Drive Clutch Installation 12
Checking for Flywheel Misalignment 13
Two Plate Pot/Recess Flywheel Clutch Installation 14
Two Plate Flat Flywheel Clutch Installation 14
Dimension “A” 14
Transmission Installation 15
Release Bearing Adjustment 15
Clutch Linkage Adjustment 16
Lubrication of Release Bearing 17
Dimension “A”/Flywheel Specifications 17
Common Service Problems 18

Section Three - Adapter Kits

14-2 DPB and DLB - Push Type Adapter Kit Installation 19
14-2 - Pull Type Adapter Kit Installation 19
13/330-2 Plate Pot/Recess and Flat Flywheel 20
Adapter Kit Installation

CLUTCH ASSEMBLY CUTAWAY DETAIL

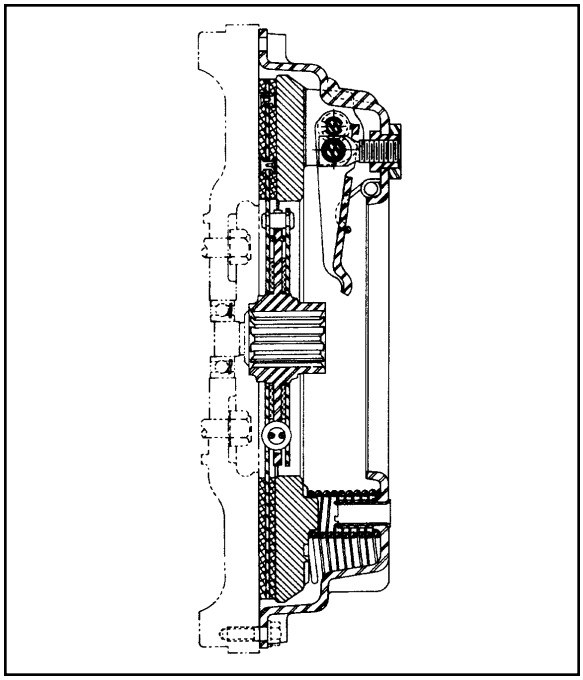

Figure 1.
Haldex 13” (330 mm) and 14” single plate clutch assembly on a flat flywheel.

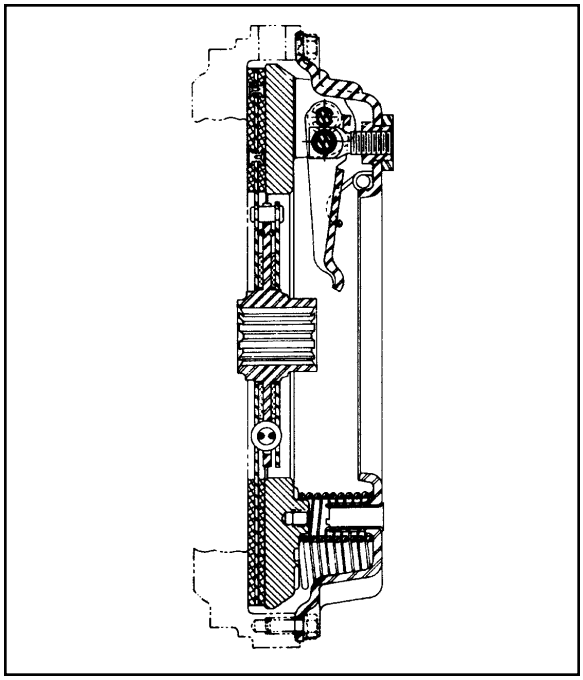

Figure 2.
Haldex 14” single plate clutch assembly on a pot (recessed) flywheel.

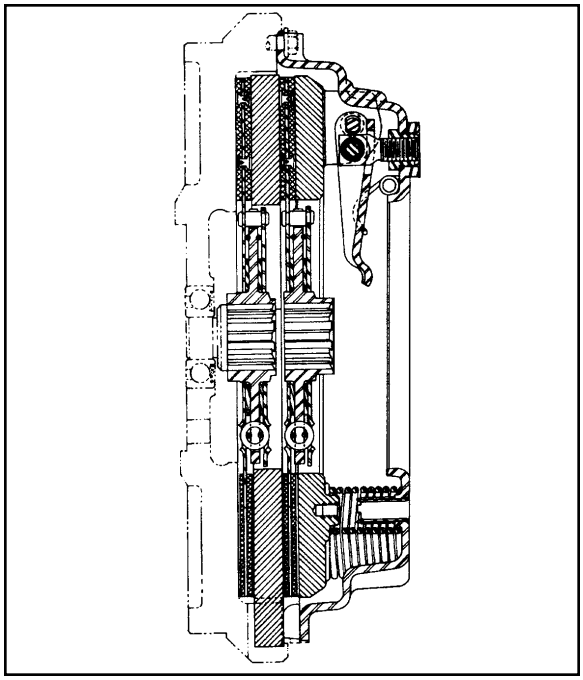

Figure 3.
Haldex 13” (330 mm) and 14” two plate clutch assembly on a pot (recessed) flywheel.

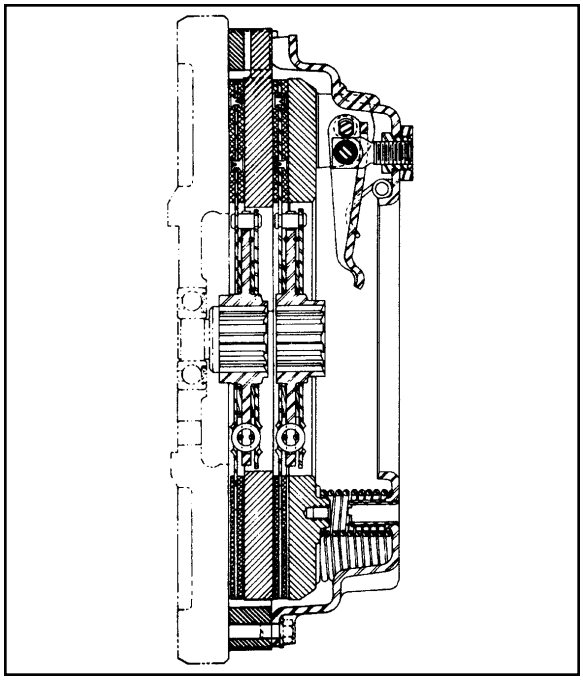

Figure 4.
Haldex 13” (330 mm) and 14” two plate clutch assembly on a flat flywheel with an adapter ring.

(Typical Drawings)

CLUTCH CONSTRUCTION

The Haldex DPB, DLB, DO, DF and 330 type (direct pressure) clutches are precision built heavy duty units incorporating few parts. These clutch assemblies require no maintenance other than maintaining release bearing clearance which is accomplished by normal linkage adjustment.

The DO clutch is similar to the DPB/DLB type clutch and differs in pressure plate finish, inside diameter and does not incorporate insulating washers as it operates in oil. The DO is manufactured in 13" and 14" single plate, 13" and 14" two plate sizes.

The DLB clutches are also similar to the DPB type clutch and differ only in that the DLB are equipped with hardened steel drive lugs to afford the maximum amount of area to drive the pressure plate. The DLB also incorporates spring retainers on the inner row of pressure springs to prevent pressure spring flex at higher engine speeds. The DPB and DLB type are manufactured in 13" and 14" single and two plate sizes.

The DF clutch is also similar to the DPB type clutch and differs only in that the DF is equipped with forged release levers. The DF type is manufactured in the 13" single plate size.

CLUTCH OPERATION

The operation of the Haldex Direct pressure clutch is as follows: The clutch flywheel ring (cover) is attached to the engine flywheel and drives the pressure plate by means of driving lugs in the flywheel ring (cover) and mating slots in the pressure plate.

Depressing the clutch pedal forces the release bearing against the clutch release lever. As these levers travel inward (toward the engine) the pressure plate is retracted into the cover assembly compressing the pressure springs, which in turn allows the disc assembly to float freely between the pressure plate and the flywheel.

Releasing the clutch pedal engages the clutch by allowing the release bearing and release levers to move away from the engine and the pressure springs to expand and exert force against the pressure plate, resulting in the disc assembly being gripped between friction surfaces of engine flywheel and pressure plate; thereby completely engaging the clutch.

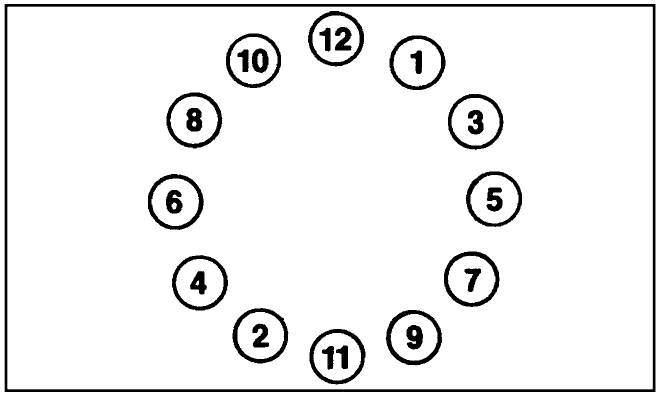

Figure 5. Tightening Sequence

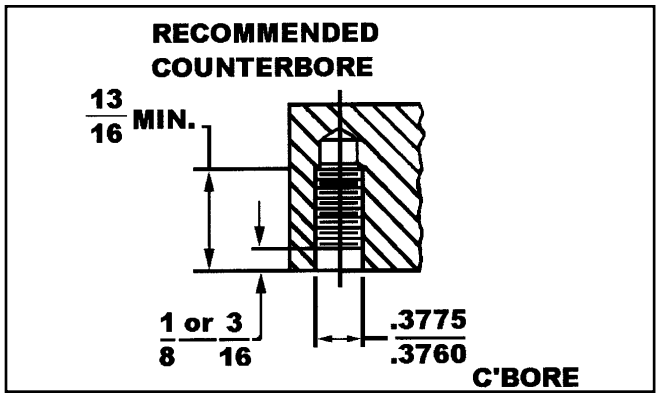

Figure 6. Recommended Counterbore

SINGLE PLATE CLUTCH INSTALLATION AND FLYWHEEL PREPARATION

Inspect Engine Flywheel

1. Check recessed type flywheels for correct depth. See Chart on Page 7.

2. Inspect the release bearing and carrier and flywheel pilot bearing. Pilot bearing should be a hand press fit in the flywheel recess and a slip fit on the transmission input shaft. The release yoke or fork should contact the release bearing carrier pads evenly to prevent a bind on the front bearing cap extension.

3. The friction face of the flywheel must be free from heat cracks, score marks, or taper and must be parallel to the crankshaft mounting flange. The presence of any of these conditions will have an adverse effect on clutch function and life.

NOTE: Extremely Important - every time a flywheel is reinstalled or replaced it must be inspected for misalignment. (See Page 3 for instructions on checking flywheel misalignment).

Installing Single Plate Clutch Assembly

(See Figure 1 and Figure 2, Page 1)

1. It is a good idea to try the cover assembly on the flywheel without the disc assembly to insure proper fit where cover is piloted on the O.D. (Figure 2, Page1).

NOTE: On DO (oil spray) clutch assemblies the driven discs must be soaked in oil prior to installation.

2. Install driven disc, making sure that it is properly positioned and insert an aligning shaft. Normally the long end of the driven disc hub extends toward the transmission, but in a few instances the long end may face toward the engine. A minimum of 5/32" must be maintained between the pilot bearing and the flywheel side disc hub. The minimum distance of 5/16" must be maintained between the flywheel friction face and the flywheel to crankshaft mounting bolt heads (Figure 7).

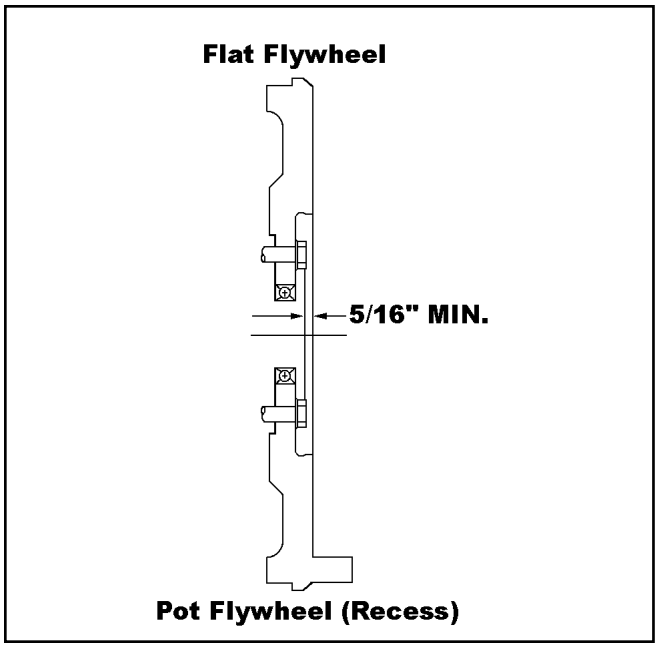

Figure 7.

3. Bolt the cover assembly to the flywheel using only SAE Grade 8 cap screws, tighten progressively in sequence (Figure 5) until the cover is drawn up tight using 35 to 45 lbs.-ft. of torque. Extreme care must be exercised to insure that the flywheel ring or cover is seated in the piloting rim on recessed type flywheels (Figure 2, Page 1).

4. Remove the cover assembly shipping block or hold down bolts, only after bolting to flywheel.

5. Cover assemblies mounted on flat flywheels (Figure 1, Page 1) are piloted to the flywheel by cap screws with a ground shank which fits the reamed holes in the cover. The machined shank extends through the cover into a recessed or counterbored hole in the flywheel (Figure 6).

6. If the flywheel has been re-machined to remove heat cracks or scores, the counterbored holes may require reaming to allow complete seating of the cover assembly. If the flywheel cannot be restored to original conditions, replace the flywheel.

Checking For Flywheel Misalignment

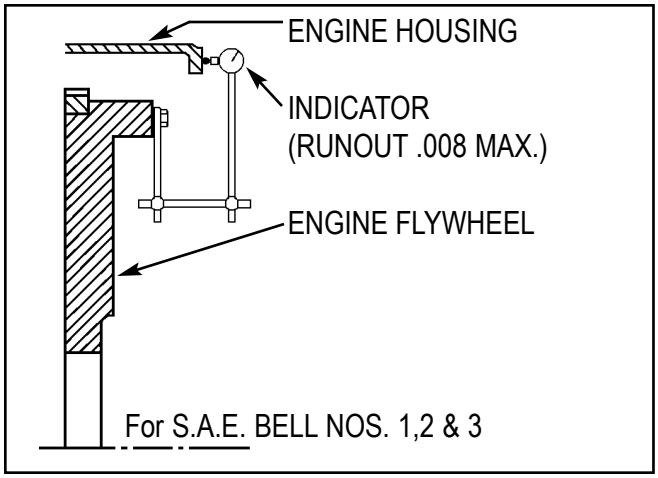

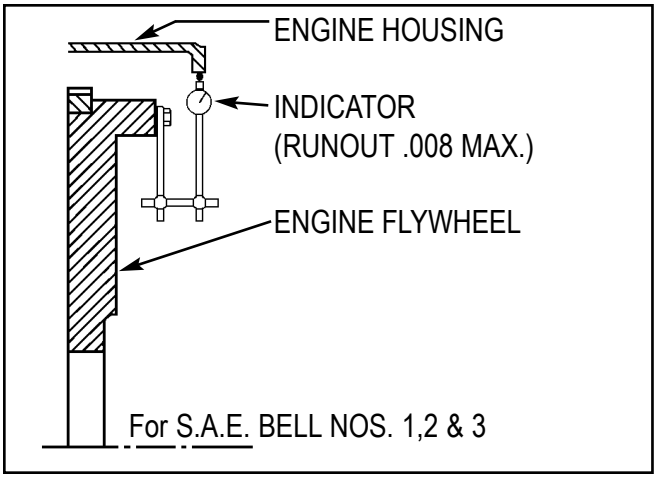

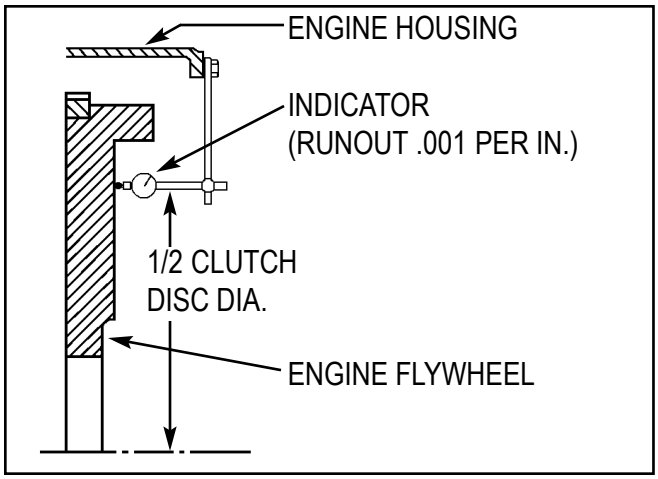

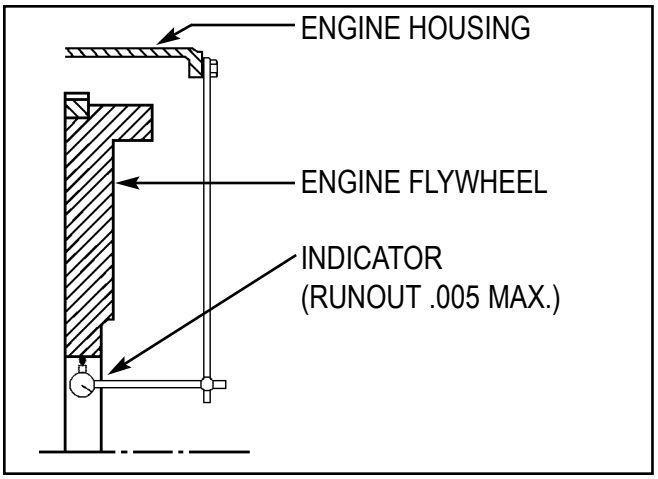

The centerline or axis of the engine crankshaft, flywheel, clutch and transmission shall be common to these units with a permissible variation not to exceed .005” between any or all of these members.

TWO PLATE CLUTCH INSTALLATION

1. The DPB, DLB, DO and DF two plate assemblies have an intermediate plate with driving lugs which fit into mating slots of the flywheel or adapter ring.

NOTE: On DO (oil spray) clutch assemblies the driven discs must be soaked in oil prior to installation.

2. Before installing a two plate assembly, the intermediate plate should be set into the driving slots of the flywheel or adapter ring and clearances checked. A gap of .006" to .012" is recommended.

Adapter Ring Applications

NOTES:

a. The adapter ring must be positioned so the ventilating slots are next to the flywheel.

b. The intermediate plate is directional and must be installed as labeled. The slots for the intermediate plate must face transmission.

c. On 13" - (330) flywheels that have less than 12 screw holes, use the adapter ring as a template to drill the other holes. A 3/8" drill should be used for spotting the holes. Drill with a 5/16" and tap the holes with a 3/8" - 16 UNC tap. Then install the ring in the same position as when spotting the holes to assure proper alignment.

d. We suggest that a pair of standard 3/8" - 16 UNC cap screws 3" long be used as pilots. Cut the heads from these cap screws, saw a screwdriver slot in the end and install them in opposite holes in the flywheel. These pilots will support the adapter ring as the clutch is being installed.

e. On remachined flywheels, insure the counterbores are still deep enough to allow secure tightening of the cover assembly and adapter ring to the flywheel (Figure 6, Page 2).

330-2 Plate (Figure 9)

14.125" Bolt Circle use Adapter Kit AK313
14.500" Bolt Circle use Adapter Kit
14.625" Bolt Circle use Adapter Kit AK315

The 330mm cover assembly and adapter ring use a common mounting bolt (Figure 9).

* For Chevrolet/GMC application with 409/427 engines having 7/16-14 mounting bolts use Adapter Kit AK 316 (Figure 8).

The adapter ring is attached to the flywheel by (4) X2-140 cap screws in every third hole. (Applies only to 409 and 427 gas engines.)

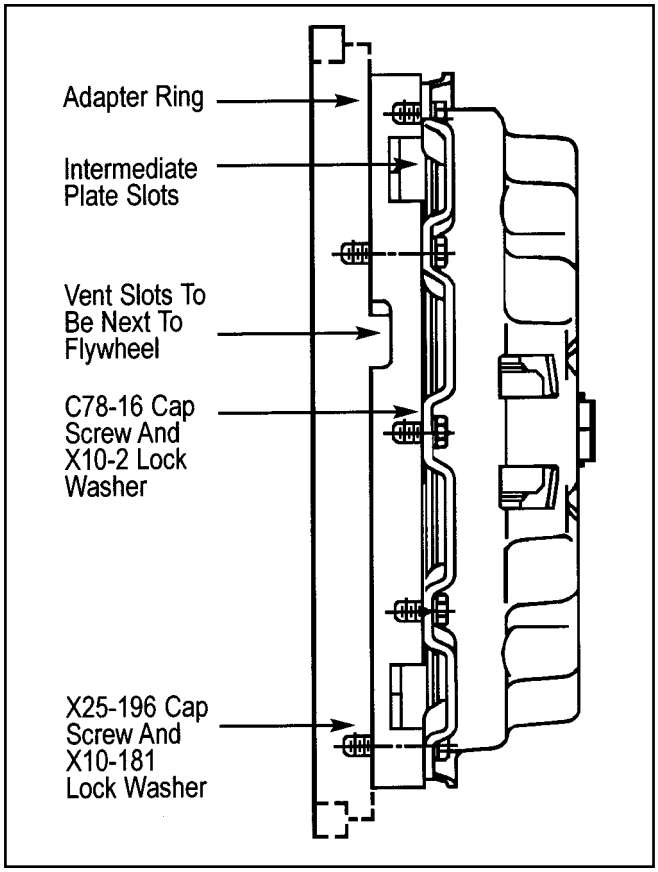

Figure 8. 330-2 Plate

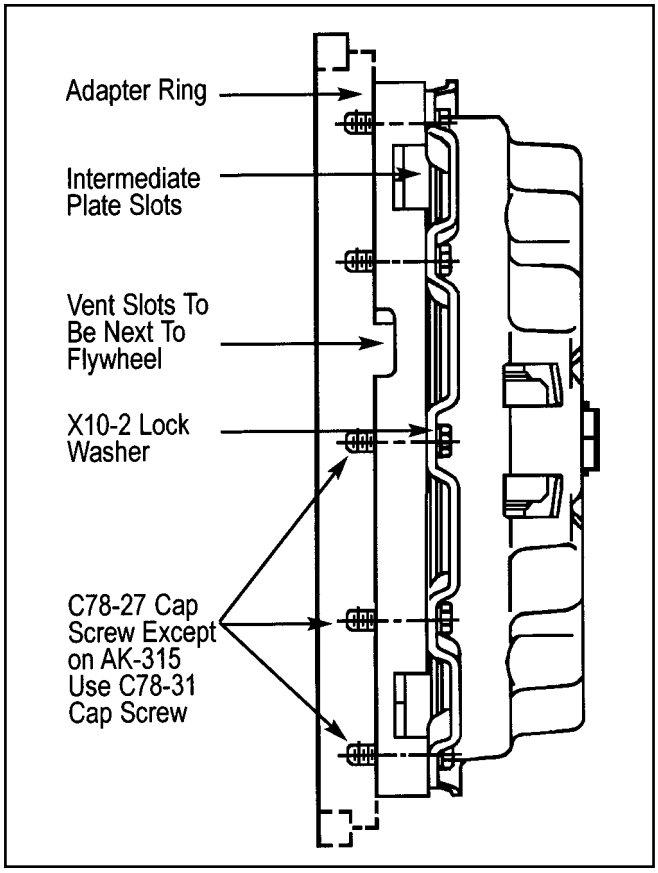

Figure 9. 330-2 Plate

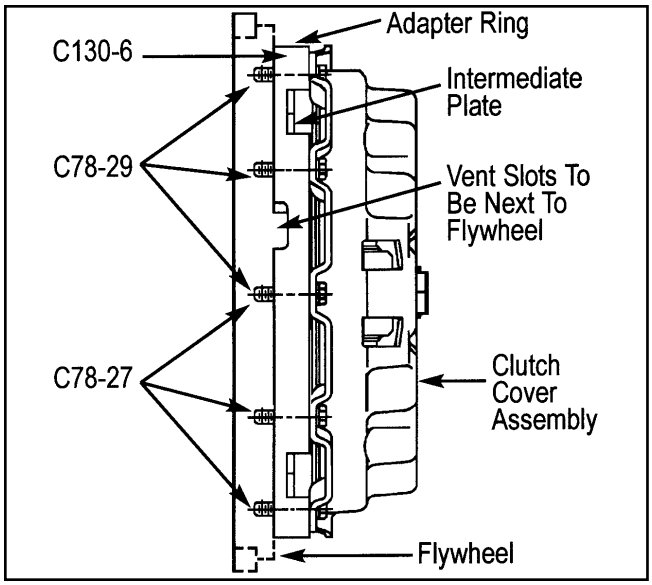

Figure 10. 14”-2 Plate DLB, DPB

14”-2 Plate DLB, DPB (Figure 10)

The 14”-2 plate DLB and DPB cover assemblies use a common mounting bolt.

The AK206 Adapter Kit has (12) C78-29 cap screws 2 1/8” long and can only be used on flywheels with 3/16” deep counterbores (Figure 6, Page 2).

The AK208 Adapter Kit has (12) C78-27 cap screws 2” long and is intended for flywheels with counterbores 1/8” deep (Figure 6, Page 2).

3. The two disc assemblies for a two plate clutch may or may not be identical or interchangeable. In most cases they will not be interchangeable and will be marked either flywheel side or pressure plate side. They must be positioned with the side of the disc as marked, next or adjacent to the respective part. A minimum of 5/32” must be maintained between the pilot bearing and the flywheel side disc hub. The minimum distance of 5/16” must be maintained between the flywheel friction face and the flywheel mounting bolt heads (Figure 7, Page 3).

NOTE: If the disc assemblies are equipped with cera-metallic button facing it is suggested that the facing material on the two discs be lined up.

4. When installing two plate clutches, it is essential that a splined shaft or aligning shaft (Haldex TCT14 1 1/2”-10, TCT15 1 3/4”-10 or TCT16 2”-10) be used to properly align the two disc assemblies.

5. With a spline alignment tool place the driven discs and intermediate plate on the flywheel. Attach the clutch cover assembly to the flywheel using the 12 cap screws provided in the adapter kit. Do not tighten any cap screws until all 12 have been installed and finger tight, torque to 35-45 lbs.-ft. (See Figure 5, Page 2, for tightening sequence.)

NOTE: The 330mm clutch cover must be aligned to the intermediate plate. To do so place the stand directly over an intermediate plate drive lug (align 2 plate lug here).

6. Remove the cover assembly shipping blocks or hold down bolts and spline alignment tool.

7. To obtain complete disengagement of Type DPB, DLB, DO and DF clutch assemblies, the release levers must be actuated a specified distance from the engaged position. Assuming the release bearing clearance (distance between the clutch release levers and release bearing) to be 1/8” when the clutch is in the engaged position, the release bearing must move forward 1/8” to take up this clearance before it contacts the release levers. After the release bearing contacts the release lever 1/2” of additional travel is required to disengage the clutch assembly (Figure 13, Page 6).

DIMENSION “A”

1. Dimension “A” is the distance from the top of the clutch flywheel ring cover to the ends of release levers (Figure 11).

2. Check chart on Page 7 for correct “A” Dimension. Satisfactory operation of the clutch depends greatly upon the accuracy of the lever setting, as this controls the parallel movement of the pressure plate.

3. A straight edge and scale can be used to check the “A” Dimension as shown in Figure 11.

4. New or genuine Haldex Heavy Duty exchange cover assemblies are pre-adjusted at the factory and the lever settings shall not be altered. If the “A” Dimension does not check out according to the chart on Page 7 within 1/8”, recheck the complete installation. If after rechecking the installation, the “A” Dimension still does not check out, return the cover assembly for exchange.

NOTE: If release levers are not in plane, it is an indication that the cover is not properly seated in the flywheel. Check “A” Dimension (Figure 11) and see chart on Page 7.

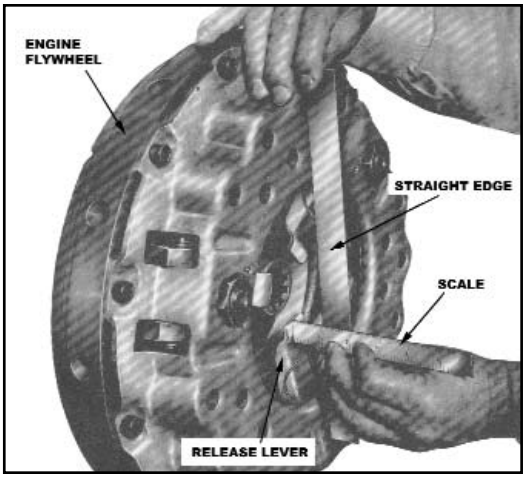

Figure 11. Checking “A” Dimension

CLUTCH LINKAGE ADJUSTMENT

Never wait for the clutch to slip before making a pedal adjustment.

1. Keep the clutch pedal in proper adjustment by frequent inspection of the “Free Travel” (the first easy movement of the clutch pedal).

2. Check clutch pedal with your hand to be positive that “Free Travel” is a result of actual release bearing clearance and not caused by worn linkage (Figure 12).

3. Proper clutch pedal “Free Travel” is approximately 1 1/2”. The gradual reduction from this amount is a normal condition caused by wearing of the disc friction facings.

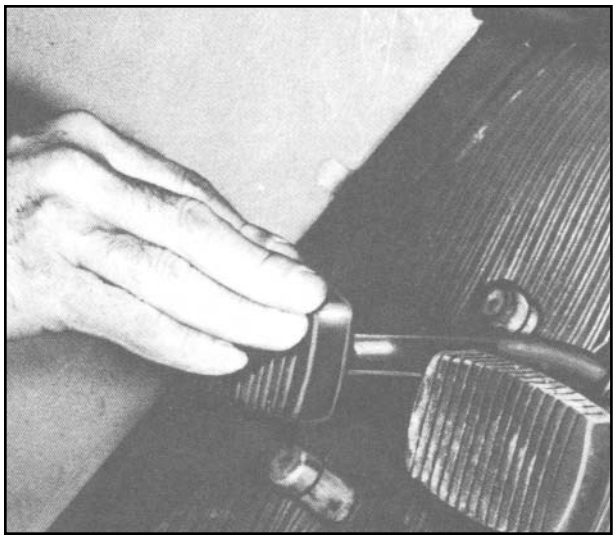

Figure 12. Checking Clutch Pedal “Free Travel”

4. If inspection indicates clutch pedal “Free Travel” is less than 1/2”, immediate adjustment of the clutch pedal linkage should be made to restore proper 1 1/2” “Free Travel” (Figure 12). This 1 1/2” pedal “Free Travel” normally results in 1/8” clearance between the clutch release levers and release bearing.

5. If excessive free play is present in the clutch pedal linkage due to worn parts, the worn parts must be replaced. Excessive wear of the release linkage may give a false impression of the actual amount of release bearing clearance.

CAUTION: Excessive clutch pedal “Free Travel” may prevent complete clutch disengagement while insufficient clutch pedal “Free Travel” may cause slippage and short clutch life.

CLUTCH LINKAGE REQUIREMENTS

The clutch pedal linkage is required to move the release bearing approximately 5/8”. This 5/8” is made up of 1/8” clearance between the bearing and the release levers (free play) and 1/2” that the release lever must move inward to complete clutch disengagement (Figure 13).

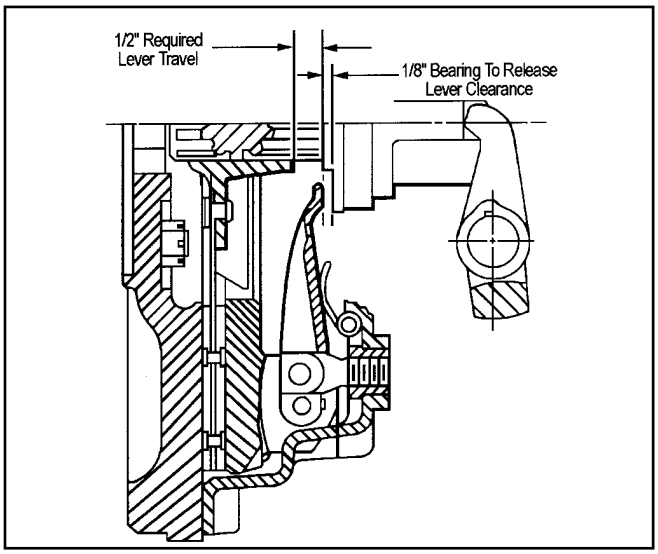

Figure 13. Total Release Bearing Travel Must Be Approximately 5/8”

DIMENSION "A" / FLYWHEEL SPECIFICATIONS

ASM Old Part Number	ASM NEW Part Number	Dimension "A" ± 1/8"	Flywheel Depth ± .005"
140-062-665W	140-302-1113W***	29/32"	1.093"
140-081-931	140-081-1756	23/32"	.976"
140-081-940	140-081-1756	23/32"	.976"
140-302-962	140-302-1072W***	1 3/32"	1.065"
140-301-978	140-301-1505	1 3/32"	Flat
140-082-1014	140-082-1014***	25/32"	.795"
140-301-1046	104-301-1076	29/32"	1.187"
140-301-1047	140-304-1505	29/32"	Flat
120-081-1057	OBSOLETE	7/8"	Flat
140-301-1058	140-301-1058	29/32"	1.187"
140-302-1064W	140-302-1064W***	15/16"	1.093"
140-302-1066	140-302-1064W***	15/16"	1.093"
140-302-1067W	140-302-1067W***	15/16"	1.093"
140-301-1068	140-301-1107	29/32"	Flat
140-081-1069	140-081-1756	29/32"	.976"
140-302-1072W	140-302-1072W*	1 3/32"	1.062"
140-301-1076	140-301-1076	29/32"	1.187"
140-301-1086	140-301-1086	29/32"	Flat
140-301-1097	140-302-1113W	29/32"	Flat
140-301-1098	140-301-1076	29/32"	1.187"
140-301-1101	140-301-1076	29/32"	1.187"
140-301-1102	140-301-1076	29/32"	1.187"
140-301-1106	140-301-1076	29/32"	1.187"
140-301-1107	140-301-1107	29/32"	Flat
140-302-1113W	140-302-1113W***	29/32"	1.093"
140-301-1505	140-301-1505	29/32"	Flat
140-301-1509	140-301-1505	29/32"	Flat
140-302-1521	140-302-1113W***	29/32"	1.093"
140-302-1523	140-302-1113W***	29/32"	1.093"
140-301-1558	140-301-1086	29/32"	Flat

ASM Old Part Number	ASM NEW Part Number	Dimension "A" ± 1/8"	Flywheel Depth ± .005"
140-081-1637	140-081-1756	2 3/32"	.976"
140-301-1641	140-061-1686	2 9/32"	Flat
140-061-1686	140-061-1686	2 9/32"	Flat
140-081-1756	140-081-1756	23/32"	.976"
140-061-1770	140-302-1113W	2 59/64"	Flat
140-301-1771	OBSOLETE	1 3/16"	Flat
140-081-1772	140-081-1756	23/32"	.976"
140-081-1826	140-081-1756	23/32"	.976"
330-501-1864	330-031-1935	1 1/16"	Flat
330-031-1926	330-061-1938	23/32"	Flat
330-032-1927	330-032-1989W**	19/32"	1.062"
330-061-1928	330-061-1938	23/32"	Flat
330-031-1930	330-031-1930	5/8"	Flat
330-032-1931W	330-032-1931W**	23/32"	1.062"
330-031-1932	330-061-2077	13/32"	Flat
330-031-1933	330-031-1933	9/32"	Flat
330-061-1934	330-061-1934	23/32"	Flat
330-031-1935	330-061-1935	11/16"	Flat
330-061-1938	330-061-1938	27/32"	Flat
330-062-1940	330-062-1940#	9/16"	1.477"
330-032-1941W	330-032-1941W**	23/32"	1.062"
330-081-1947	330-081-1947	23/32"	Flat
330-061-1948	330-061-1948	27/32"	Flat
330-031-1963	330-031-1926	27/32"	Flat
330-081-1964	330-081-1964	27/32"	Flat
330-032-1989W	330-032-1989W	27/32"	1.062"
330-061-2015	330-061-2015	27/32"	Flat
330-061-2076	330-061-2077	13/32"	Flat
330-061-2077	330-061-2077	13/32"	Flat
330-061-2369	330-061-2369	13/32"	Flat

Intermediate Plate Thickness:

* 14" .732 +.000/-.003

** 13" .676 +.000/-.003

*** 14" .754 +.000/-.003

\# 13" .874 +.000/-.003

Note:

Tolerances for remanufactured clutches are the same as new clutches.

COMMON SERVICE PROBLEMS

Problem	Remedy
CHATTER	
1. Loose, broken or worn engine mounts	1. Tighten or replace
2. Worn pedal linkage	2. Replace linkage
3. Loose or cracked clutch housing	3. Tighten or replace
4. Spring shackles and mountings loose, worn or broken	4. Tighten or replace
5. Misalignment	5. Realign
6. Oil or grease on facings	6. Install new facings or disc assembly
7. Warped or bent driven disc assembly	7. Install new disc assembly
8. Improper disc facing thickness	8. Install proper disc assembly
9. Worn pilot bearing	9. Replace
10. Wrong spring pressure in cover assembly	10. Replace with proper cover assembly
11. Improper "A" dimension (Type ML Only)	11. Adjust for "A" dimension according to ML Service Manual
12. Unequal quantity of shims under straps of ML clutch	12. Use same quantity of shims under each strap
13. Release levers not parallel	13. Recheck installation
AGGRESSIVE	
1. Release sleeve dry (Type ML Only)	1. Lubricate release sleeve
2. Worn or loose pedal linkage	2. Replace or tighten
3. Excessive backlash in power train	3. Adjust or replace worn parts
4. Warped driven disc	4. Install new disc assembly
5. Worn hub splines	5. Install new disc assembly
6. Worn or rusty splines on input shaft	6. Replace shaft or install Haldex Spline-Saver disc kit
7. Improper facing material	7. Install proper disc assembly
8. Loose cera-metallic button facing	8. Replace facing or install new disc assembly
9. Burned cera-metallic button facing	9. Replace facing or install new disc assembly
INSUFFICIENT RELEASE	
1. Loose, broken or worn motor mounts	1. Tighten or replace
2. Worn or loose pedal linkage	2. Tighten or replace
3. Excessive idle speed	3. Adjust to factory specification
4. Loose or worn facings	4. Replace facings or install new disc assembly
5. Improper facing thickness	5. Install proper disc assembly
6. Warped or bent driven disc assembly	6. Properly install recommended disc assembly
7. Lever setting wrong	7. Refer to your Haldex Service Manual
8. Worn hub splines	8. Replace with new disc assembly
9. Worn or rusty splines or input shaft	9. Replace shaft or install Haldex Spline-Saver disc kit
10. Worn pilot bearing	10. Replace
11. Worn or cocked drive pins	11. replace or align
12. Insufficient release bearing travel	12. Repair or replace linkage
HARD PEDAL	
1. Worn pedal linkage	1. Replace with new linkage
2. Worn cross shaft, cross shaft bushing or yoke	2. Replace with new cross shaft, cross shaft bushing or yoke
3. Binding in pedal linkage (rod or cable)	3. Lubricate, adjust or replace
4. Excessive spring pressure in cover assembly	4. Install proper cover assembly
5. Contact pad of release bearing carrier worn by shifter yoke	5. Replace carrier and shifter yoke. Also check for proper alignment to provide best linkage operating positions.
SLIPPAGE	
1. Oil or grease on facing	1. Replace facing or install new disc assembly and correct oil leak
2. Loose or worn facings	2. Replace facings or install new disc assembly
3. Flywheel burned, checked, cracked or dished	3. Replace or regrind flywheel to manufacturer's specifications
4. Insufficient plate pressure	4. Install new cover assembly
5. Improper "A" dimension (Type ML Only)	5. Adjust "A" dimension to proper height
6. Binding in pedal linkage	6. Lubricate and adjust
7. Improper facing material	7. Use correct facing or replace disc assembly
8. Incorrect flywheel depth	8. Replace or regrind flywheel to manufacturer's specifications
9. Incorrect disc thickness	9. Replace facing or install new disc assembly
VIBRATION	
1. All or part of power train out of balance	1. Check each unit individually and recheck as a complete assembly
2. One or more units in power train out of alignment	2. Check and align (replace faulty component)
3. Worn splined shaft	3. Replace
4. Worn crankshaft bearings	4. Replace
5. Worn drive pins or slots	5. Replace drive pin, flywheel and or intermediate place
6. Worn or loose engine mounts	6. Replace or tighten
7. Loose or out of balance universal joint	7. Tighten or replace - check for balance
8. Clutch out of balance	8. Install balanced unit
9. Worn disc splines	9. Replace disc assembly

CLUTCH ASSEMBLY CUTAWAY DETAIL

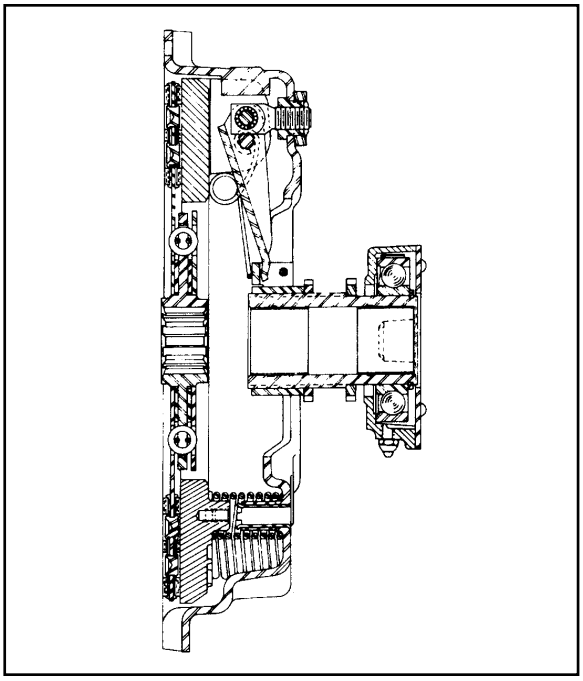

Figure 1. Haldex 13” (330 mm), 14” (350 mm) and 15” (380 mm) single plate pull-type clutch assembly on flat flywheel.

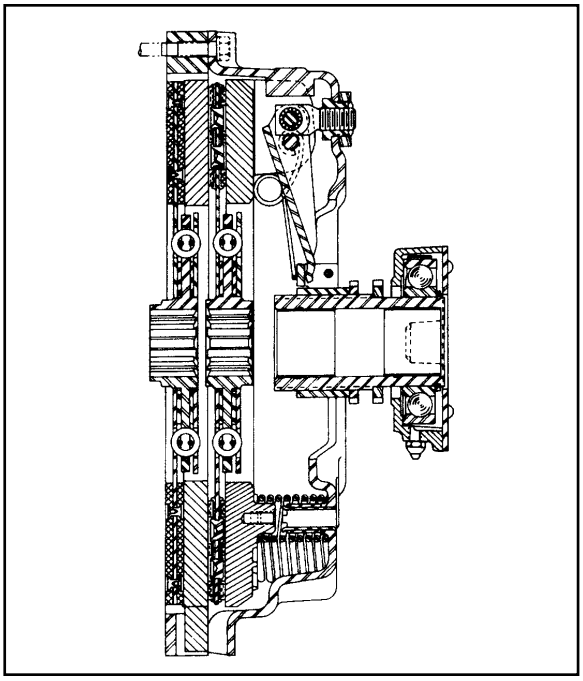

Figure 2. Haldex 13” (330 mm), 14” (350 mm) and 15” (380 mm) two-plate pull-type clutch assembly with adapter ring on flat flywheel.

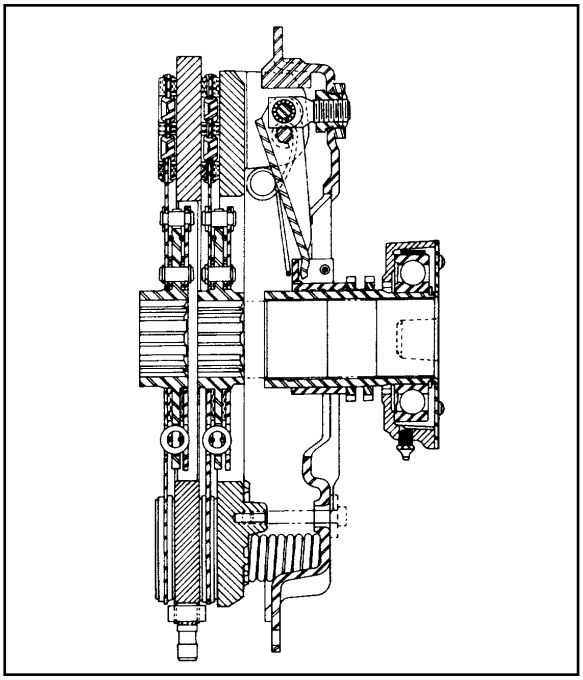

Figure 3. Haldex 14” (350 mm) two-plate pull type clutch assembly on a pot (recess) flywheel.

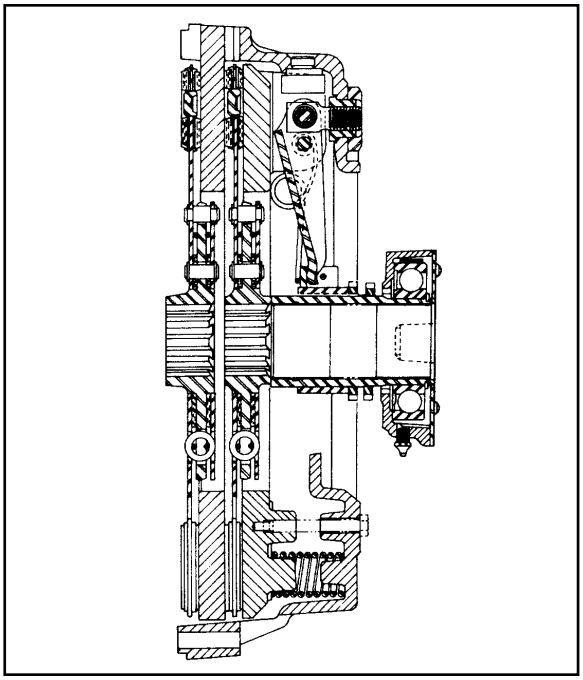

Figure 4. Haldex 15 1/2” (380 mm) two-plate pull type clutch assembly on a flat flywheel.

(Typical Drawings)

CLUTCH CONSTRUCTION

The Haldex Heavy Duty Type LP clutches are a pull type, dry disc, non-adjustable design, incorporating an adjustable sleeve connecting the release levers to the release bearing. Adjustment of this sleeve compensates for facing wear, maintains pedal lash and provides operating clearance for the clutch brake.

Anti-friction bearings are supplied in the release lever system resulting in low release load at the pedal.

CLUTCH OPERATION

The operation of the Haldex LP (pull type) clutch is as follows: The 13" (330 mm)-1, 13" (330 mm)-2, 14" (350 mm)-1 and 14" (350 mm)-2 clutch flywheel ring (cover) is attached to the engine flywheel by twelve 3/8" cap screws, 7/16" cap screws are used for 15" (380 mm)-1, 15" (380 mm)-2 and 15 1/2" (380 mm)-2 plate applications.

The 14"-2 pressure plate (Figure 3) is driven by means of driving lugs extended into mating slots of the flywheel ring (cover). The intermediate plate is driven by drive pins locate din the engine flywheel.

The 13" (330 mm)-1, 13" (330 mm)-2, 14" (350 mm)-1, 14" (350 mm)-2, 15" (380 mm)-1, 15" (380 mm)-2 and 15 1/2" (380 mm)-2 pressure plate (Figure 1, 2 and 4) is driven by drive lugs or pins welded in the flywheel ring (cover). On 13" (330 mm)-1, 13" (330 mm)-2, 14" (350 mm)-2 and 15" (380 mm)-2 plate clutch assemblies (Figure 1 and 2) the intermediate plate is driven by extended drive lugs that engage matching slots in he flywheel adapter ring. On 15 1/2" (380 mm)-2 plate the intermediate plate is driven by extended drive lugs that engage matching slots in the flywheel ring cover.

Depressing the clutch pedal forces the release bearing toward the transmission. The release bearing being connected to the release levers thus retracts the pressure plate from contact with the driven disc assembly, thereby relieving the pressure on the intermediate plate and the forward driven disc assembly which disengages the clutch.

Releasing the clutch pedal allows the release bearing assembly to move toward the engine permitting the pressure plate to move toward the flywheel clamping the disc assemblies and the intermediate plate against the flywheel causing engagement.

CLUTCH INSTALLATION AND FLYWHEEL PREPARATION

Insure that the flywheel friction face is free from heat checks (cracks), scoring, dish or taper (.005 max.) and parallel to the crankshaft mounting flange. (See page 13 "Checking for Misalignment.")

A. Clutch assemblies that are bolt piloted 13" (330 mm)-1 plate, 14" (350 mm)-1 plate (Figure 1, Page 9), and 13" (330)-2 plate 14" (350mm)-2 plate (Figure 2, Page 9) require the mounting bolt hole within the flywheel to be counterbored 2/8 or 3/16 of an inch depending upon the application (Figure 5).

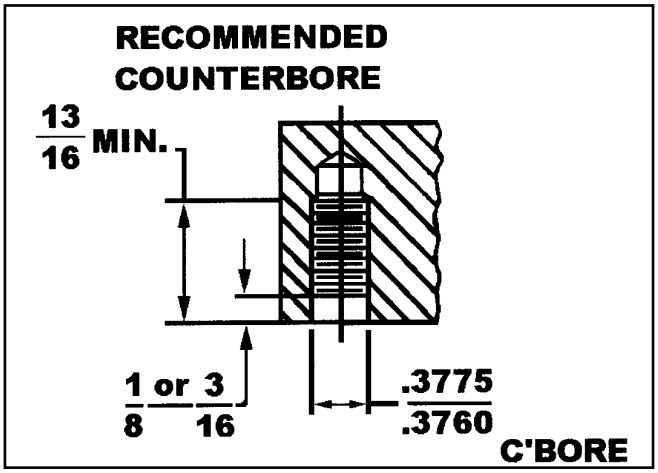

Figure 5. Recommended Counterbore (For Flat Flywheels with 14" Clutch Assemblies)

NOTE: The pilot bearing should be a minimum of 11/16" below the friction face of the flywheel.

B. On clutch assemblies that are tenon piloted, [Figure 3, Page 9, 14" (350 mm)-2 plate on pot/recess flywheels], it is essential that the following flywheel conditions be met:

1. A flywheel pot depth of 2.937" +/- .005.

2. Insure that the drive pins (dogs) are press fitted into the flywheel rim and that the heads are square with the flywheel friction face, within .0015.

Haldex Heavy Duty Tool TCT2 will assist in installing new pins and assure that they are properly aligned. (See Figure 6.) Drive pins must be square to provide proper clearance for the drive slots in the intermediate plate. If the Haldex Tool TCT2 is not available, a machinist's square and .0015 feeler gauge may be used to check for squareness.

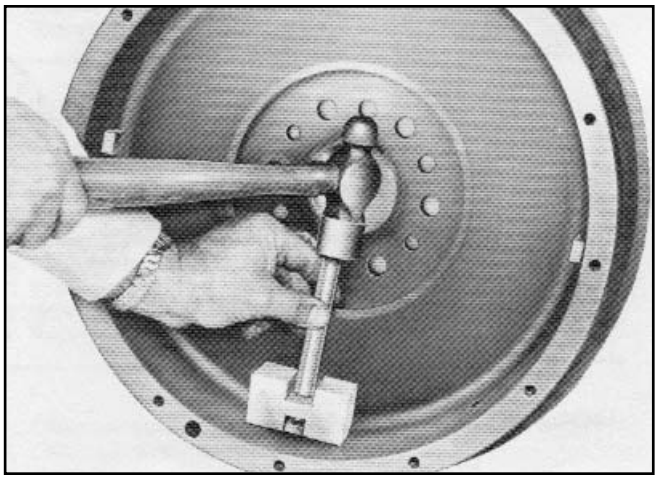

Figure 6. Driving Pin Alignment Gauge TCT2

Clutch assemblies that are O.D. piloted; 15" (380 mm)-1 (Figure 1, Page 9), 15" (380 mm)-2 (Figure 2, Page 9), 15 1/2" (380 mm)-2 (Figure 4, Page 9) require a 1/8" lip on the O.D. of the flywheel. This lip must have an inside diameter of between 17.156" to 17.159".

NOTE: The minimum distance between the flywheel friction face and the pilot bearing should not be less than 5/8". Whenever a flywheel has been machined or replaced it is suggested that it be checked for misalignment when reinstalled (see Page 13).

Installing a Single Plate Clutch Assembly (Figure 1, Page 9)

It is a good idea to try the cover assembly on the flywheel without the disc assembly to insure proper fit where cover is piloted at O.D.

With an alignment shaft TCT15 (1 3/4" - 10), TCT21 (1 3/4" - 10 with 205 pilot bearing) or TCT16 (2" - 10) install driven disc assembly, assuring that it is properly positioned. The drive disc assemblies will be labeled flywheel side or pressure plate side. Normally the long end of the driven disc hub extends toward the transmission, but in a few instances the long end may face toward the engine. Make sure that the driven disc hub does not come within 5/32" of the pilot bearing, and that the minimum distance of 5/16" must be maintained between the flywheel friction face and the flywheel to crankshaft mounting bolt heads (Figure 8).

Bolt the cover assembly to the flywheel, tightening each SAE Grade 8 cap screw progressively in sequence (Figure 7) until the cover is drawn up tight using 45 lbs./ft. on 3/8"-16 UNC (55 lbs/.ft. on 7/16"-14 UNC) of torque. Extreme care must be exercised to make sure flywheel ring or cover is seated properly.

Remove the three pressure plate hold down bolts (shipping bolts) and alignment shaft.

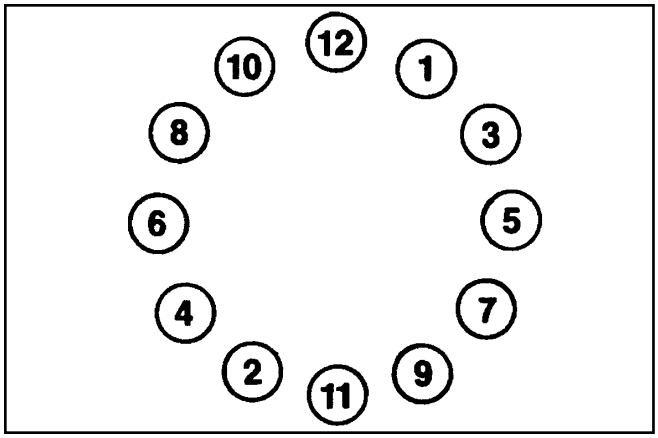

Figure 7. Cover Tightening Sequence

Special Cap Screws

Some cover assemblies are piloted to the flywheel by cap screws with a ground shank which fits the reamed holes in the cover. The machined shank extends through the cover into a recessed or counterbored hole in the flywheel. If a flywheel has been machined the cover mounting bolt hole counterbore could be too shallow and may require deepening. (See counterbore requirement Page 10, Figure 5.)

Installing Two Plate Clutch Assembly with Adapter Rings -- Lug Drive Intermediate Plate (Figure 2, Page 9 - Flat Flywheel Applications)

1. The 14" and 15" two plate assemblies have an intermediate plate with driving lugs which fit into mating slots of the adapter ring. The slots for the intermediate plate must face the transmission.

   NOTE: The adapter ring must be positioned so the ventilating slots are next to the flywheel.

2. A pair of standard 3/8"-16 UNC cap screws 3" long for the 14" clutch assembly and 7/16" - 14 UNC cap screws 3" long for the 15" clutch assembly should be used as pilot bolts. Cut the heads from these cap screws and saw a screwdriver slot in the end opposite of the thread to facilitate installation and removal. These pilots will support the adapter ring as the clutch is being installed.

3. Before installing a two plate assembly, the intermediate plate should be set into the driving slots of the adapter ring and clearances checked. A gap of .006" to .012" is recommended to allow for free movement of the intermediate plate.

4. The two disc assemblies for a two plate clutch, in most cases, are not identical or interchangeable. The disc assemblies will be marked either flywheel side or pressure plate side. They must be positioned with the side of the disc as marked, next or adjacent to the respective part. A minimum of 5/32" must be maintained between the pilot bearing and the flywheel side disc hub. The minimum distance of 5/16" must be maintained between the flywheel friction face and the flywheel to crankshaft mounting bolt heads (Figure 8).

   NOTE: If the disc assemblies are equipped with cera-metallic button facings it is suggested that the facing material on the two discs be lined up.

5. When installing two plate clutches, it is essential that a splined shaft or aligning shaft, Haldex TCT14 (1 3/4"- 10) or TCT15 (2" - 10) be used to properly align the two disc assemblies. All other instructions for installing two plate clutches are the same as for single plate assemblies.

6. Bolt the cover assembly to the flywheel using only the special Grade 8 cap screws provided in the adapter kit. Tighten progressively in sequence (Figure 7) until the cover is drawn up tight using 45 lbs./ft. on 3/8" - 16 UNC (55 lbs./ft. on 7/16" - 14 UNC).

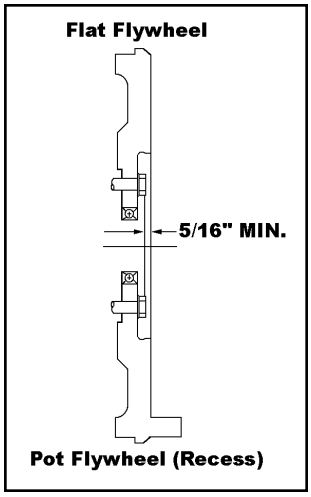

Figure 8.

7. Remove the three pressure plate hold down bolts (shipping bolts) and align shaft.

Installing Two Plate Clutch Assembly with A Strap Drive Intermediate (Figure 2)

1. 13" two plate assemblies with Adapter Kit AK326 have an intermediate plate which is strap driven.

2. A pair of standard 3/8" - 16 UNC cap screws 3" long should be used as pilots. Cut the heads from these cap screws, saw a screwdriver slot in the end and install them in opposite holes in the flywheel. These pilots will support the adapter ring as the clutch is installed.

3. Place the first disc (flywheel disc) against the flywheel.

4. While holding the first disc in place, slide the strap drive intermediate plate and adapter ring onto the 3/8"- 16 UNC guide bolts (Figure 9).

5. While holding the intermediate plate against the flywheel, insure that the intermediate plate separation control pins are firmly seated against the flywheel friction face. If they are not against the flywheel, gently tap them with a small hammer until they are seated.

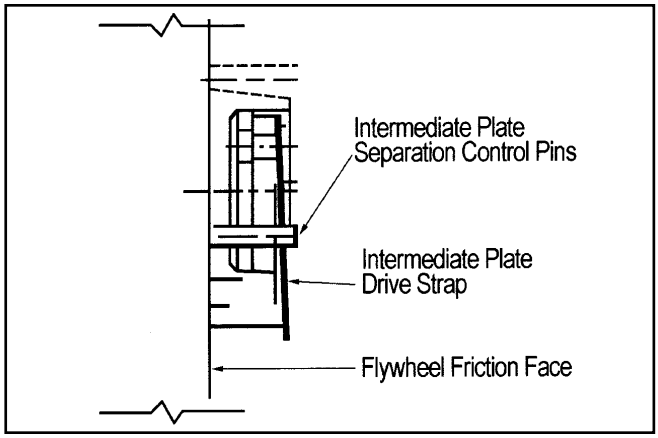

WARNING: Intermediate plate separation control pins that are not fully seated, or drive straps that are damaged or bent will cause the clutch to drag or not release.

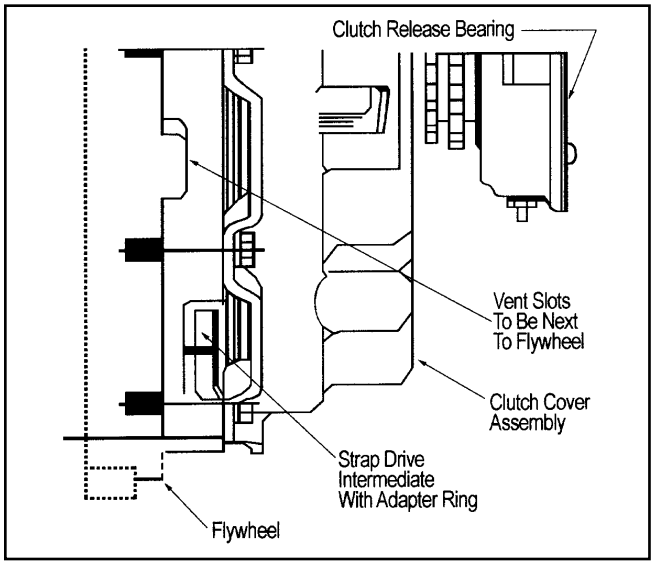

Figure 9. Pull Type Clutch

6. With a spline alignment tool, align the two disc assemblies and make sure the tool is firmly seated in the pilot bearing (TCT21 alignment tool).

7. Place the clutch cover assembly on the two guide cap screws; make sure that the alignment pin attached to the intermediate plate sets into the notched section of the stamped steel cover. This will place the section of the cover labeled "Align Lug Here" directly over an intermediate plate drive lug.

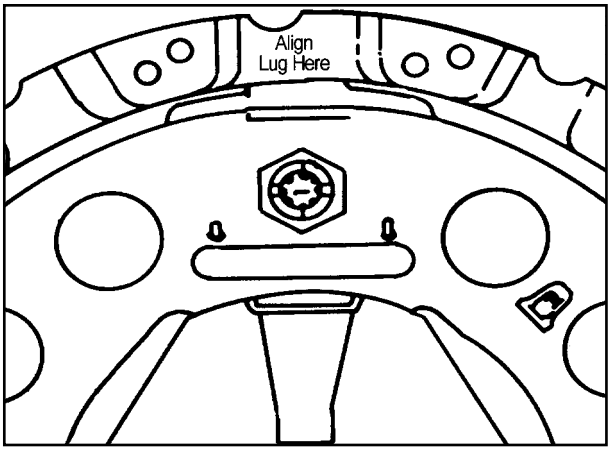

8. Insure that all 12 cap screws are installed (remove the two 3/8" - 16 UNC guide bolts) and finger tight. Torque to 35 ft. lbs - 45 ft. lbs. (Figure 7, Page 11).

9. Remove the three pressure plate hold down bolts.

Checking For Flywheel Misalignment

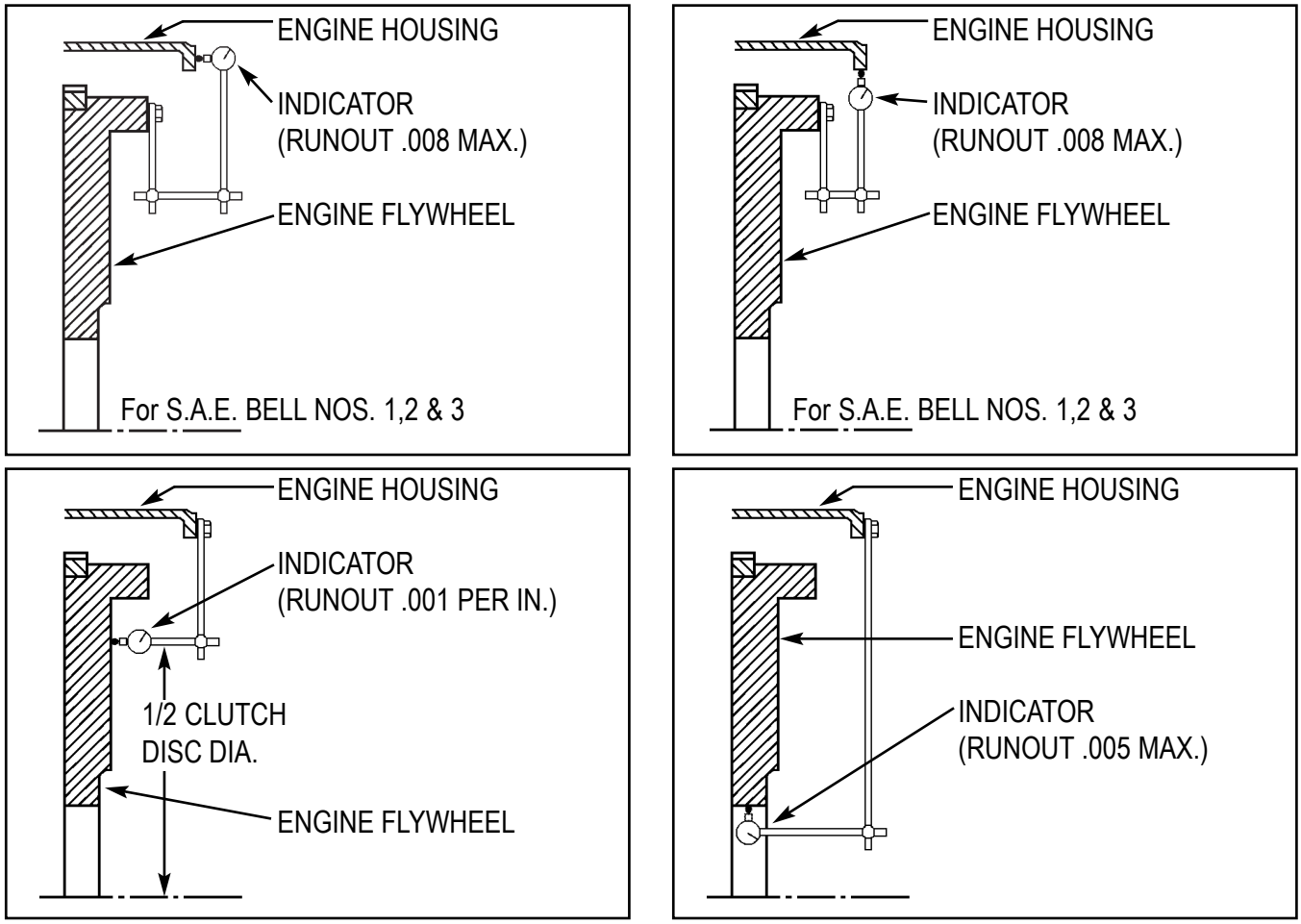

The centerline or axis of the engine crankshaft, flywheel, clutch and transmission shall be common to these units with a permissible variation not to exceed .005” between any or all of these members.

Installing a 14” Two Plate Clutch Assembly (Figure 3) (Pot/Recess Flywheel Applications)

1. The 14” two plate assemblies have an intermediate plate with drive slots which fit on drive pins (dogs) which are fastened to the flywheel (Figure 6, Page 10).

2. Before installing the two plate assembly, the intermediate plate should be set over the drive pins (flywheel) and clearances checked. A gap of .006” to .012” is recommended to allow for free movement of the intermediate plate.

3. The two disc assemblies for a two plate clutch in most cases are not identical or interchangeable. They will be marked either flywheel side or pressure plate side. They must be positioned with the side of the disc as marked, next or adjacent to the respective part. A minimum of 5/32” must be maintained between the pilot bearing and the flywheel side disc hub. Also, insure that a minimum distance of 5/16” must be maintained between the flywheel friction face and the flywheel to crankshaft mounting bolt heads (Figure 8, Page 11).

4. When installing two plate clutches, it is essential that a splined shaft or aligning shaft be used to properly align the two disc assemblies.

   NOTE: If the disc assemblies are equipped with cera-metallic button facings it is suggested that the facing material on the two discs be lined up.

5. Bolt the cover assembly to the flywheel using only Grade 8 cap screws. Tighten progressively until the cover is drawn up tight using 45 lbs./ft. torque (See Figure 7, Page 11, for tightening sequence.)

6. Remove the three pressure plate hold down bolts (shipping bolts) and alignment shaft.

Installing a 15 1/2” Two Plate Clutch (Figure 4) (Flat Flywheel Applications)

1. The 15 1/2” (380mm) two plate assemblies have an intermediate plate with driving lugs which fit into mating slots of the cover assembly.

2. Before installing a two plate assembly, the intermediate plate should be set into the driving slots of the cover assembly and clearances checked. A gap of .006” to .012” is recommended to allow for free movement of the intermediate plate.

3. The two disc assemblies for a two plate clutch in most cases are not identical or interchangeable. They will be marked either flywheel side or pressure plate side. They must be positioned with the side of the disc as marked, next or adjacent to the respective part. A minimum of 5/32” must be maintained between the pilot bearing and the flywheel side disc hub. Also insure that a minimum distance of 5/16” must be maintained between the flywheel friction face and the flywheel to crankshaft mounting bolt heads (Figure 8,Page 11).

   NOTE: If the disc assemblies are equipped with cera-metallic button facings it is suggested that the facing material on the two discs be lined up.

4. When installing two plate clutches, it is essential that a splined shaft or aligning shaft Haldex TCT14 (1 3/4” - 10) or TCT15 (2” - 10) be used to properly align the two disc assemblies. Instructions for installing two plate clutches are the same as for single plate assemblies.

5. A pair of 7/16” - 14 UNC cap screws 3” long should be used as pilot bolts. Cut the heads from these cap screws and saw a screwdriver slot in the end opposite of the threads to facilitate installation and removal.

6. Bolt the cover assembly to the flywheel using only Grade 8 cap screws. Tighten progressively until the cover is drawn up tight using 55 lbs./ft. torque (See Figure 7, Page 11, for tightening sequence.)

7. Remove the three pressure plate hold down bolts (shipping bolts) and alignment shaft.

DIMENSION “A”

1. On LP clutch assemblies, the release bearing assembly must be removed to check the “A” dimension.

2. Dimension “A” is the distance from the top of the clutch flywheel ring (cover) to the point where the release lever spider contact the release lever.

3. Check chart on Page 17 for correct “A” dimension. Satisfactory operation of the clutch depends greatly upon the accuracy of the lever setting, as this controls the parallel movement of the pressure plate.

4. A straight edge and scale will provide a means of checking the “A” dimension as shown in Figure 10.

5. New or genuine remanufactured cover assemblies are pre-adjusted at the factory and the lever settings shall not be altered. If the “A” dimension does not check within 1/8” and 1/16” parallel according to the chart on Page 17, recheck the complete installation and, if necessary, remove the cover.

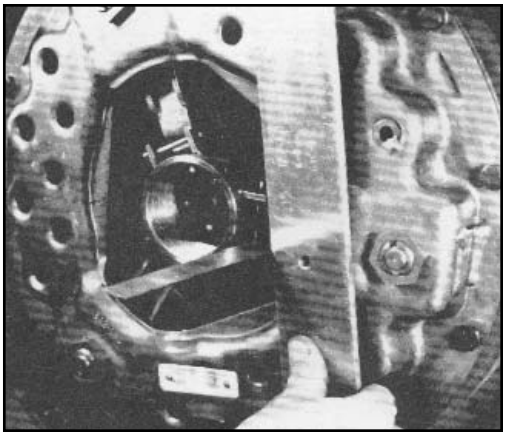

Figure 10. Checking “A” Dimension

TRANSMISSION INSTALLATION

1. Place the clutch brake on the double key slotted transmission input shaft.

   NOTE: Clutch brakes are not used with a synchronized transmission.

2. Raise the transmission and insert the transmission input shaft into the release sleeve assembly. Square up the transmission and move it forward to enter the driven disc hubs, at the same time allow the release yoke to pass the release bearing housing and fall into its normal operating position on the bearing housing wear pads. It is extremely important that the transmission be adequately supported in the line with the crank shaft of the engine to facilitate entering the driven disc splines without damaging the splines or distorting the disc assembly.

   The release sleeve and bearing assembly may be placed on the transmission input shaft with the release yoke in its operating position. Then, after the transmission has been raised into position and started forward, the adjusting sleeve must be threaded into the release lever spider. If this method is used, care must be taken that the transmission is not moved up to the engine faster than the sleeve and spider are threaded together or cotter pins may be damaged.

3. With the transmission in gear rotate the transmission output shaft while moving the transmission forward toward the engine housing. The rotation of the output shaft will align the input shaft splines with the disc hub splines.

4. After the input shaft spline has mated with the disc hub spline, continue moving the transmission forward until the bell housing seats against the engine housing.

5. Secure the bell housing (transmission) to the engine housing.

RELEASE BEARING ADJUSTMENT

1. The release levers of new or genuine factory remanufactured (Fleetsaver) cover assemblies are properly adjusted and locked at assembly and will not require further adjustment.

2. After the transmission has been securely attached to the engine, the release sleeve must be adjusted until there is approximately 1/2" between the contact surface of the release bearing housing and the transmission brake (Figure 11). Loosen sleeve locknut 1 , rotate slotted adjusting nut 2 clockwise or counter-clockwise to set "Clearance For Release Travel" (1/2"). Lock sleeve locknut 3 against release lever spider.

   NOTE: On the 13" (330 mm) - 1 plate, 13" (330 mm) - 2 plate, 15" (380 mm) - 1 plate and 15" (380 mm) - 2 plate, a light load toward the clutch brake must be placed on the bearing housing when adjusting the Clearance For Release Travel.

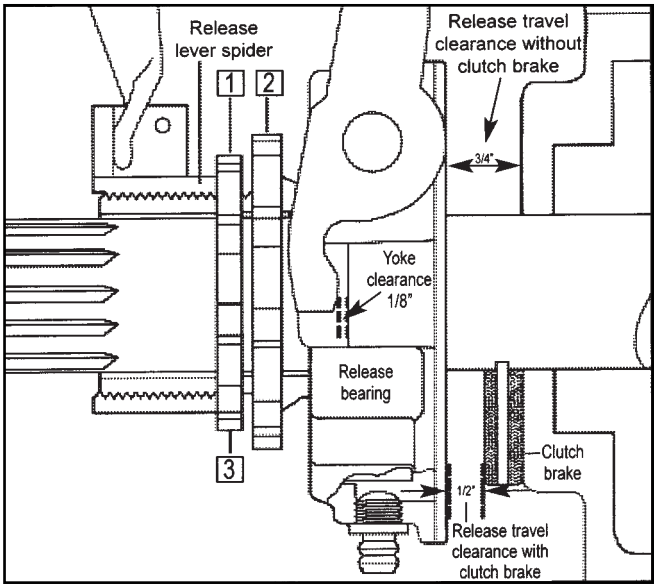

Figure 11. Sectional View of Release Bearing Assembly

3. As synchronized transmissions do not require the use of brake discs, the gap between the release bearing housing and the transmission front bearing cap should be approximately 3/4" to 7/8". The method of obtaining this gap is the same as when brake discs are used (See Paragraph 2).

   NOTE: A spanner wrench (See Figure 12) may be used for turning the notched adjusting wheel on the release sleeve. If this tool is not available a brass drift and hammer may be used.

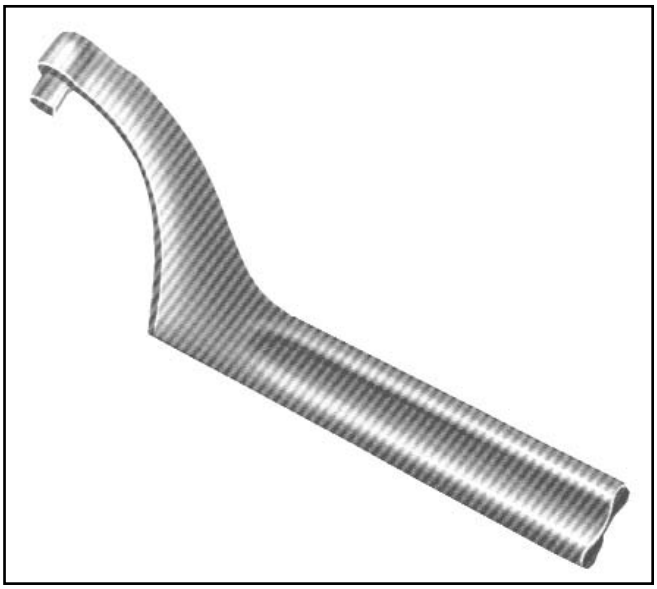

Figure 12. Spanner Wrench

CLUTCH LINKAGE ADJUSTMENT

1. Be sure release bearing sleeve is properly adjusted and locked before attempting to adjust the external linkage to set the pedal lash.

2. The clutch must be kept in proper adjustment by frequent inspection of the "Free Travel," which is the first easy movement of the clutch pedal.

3. Check the clutch pedal "Free Travel" with your hand (Figure 13) and be positive that "Free Travel" is a result of actual yoke to release bearing clearance (Figure 14) and not caused by worn linkage, or faulty hydraulic cylinders.

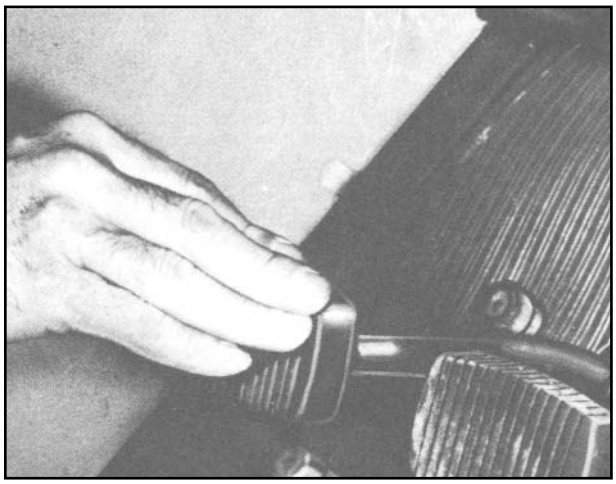

Figure 13. Checking Clutch Pedal "Free Travel"

4. The proper clutch pedal "Free Travel" is approximately 1 1/2". The gradual reduction from this amount is a normal condition caused by disc facing wear. To obtain the 1 1/2" of pedal free-play, adjust the clutch linkage until there is approximately 1/8" between the release yoke and the release bearing (Figure 14).

5. If the pedal linkage is properly adjusted at the time of assembly, it should only require further adjustment as wear takes place in the linkage or clutch brake facing.

6. "Free Travel" of the pedal will diminish as the disc facings wear and must be reestablished by adjustment of the release sleeve (Figure 11, Page 15).

7. The following items should be checked on vehicles equipped with hydraulic clutch release.

   A. Master cylinder operating lever must be adjusted so that the piston can retract fully and uncover the compensating port.

   B. The cross shaft lever should travel the same distance on each side of the vertical centerline of the cross shaft (Figure 15).

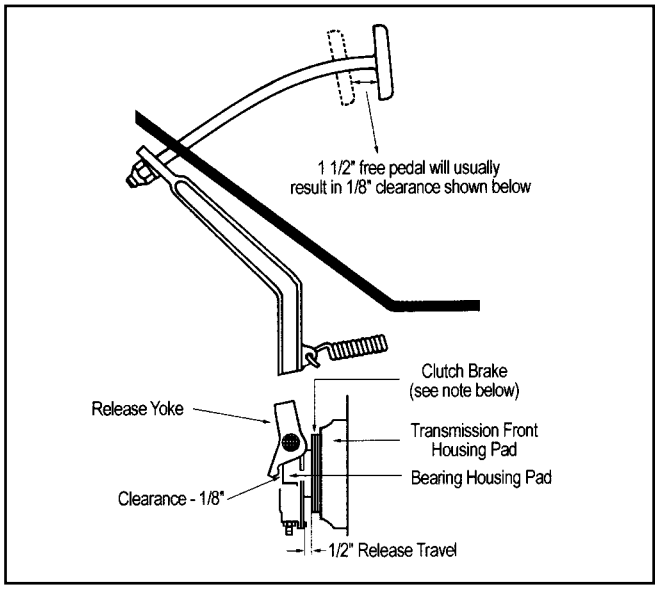

Figure 14.

NOTE: The clutch brake is not used with synchronized transmissions - in which case adjust the release bearing housing to be approximately 3/4" from the front bearing cap.

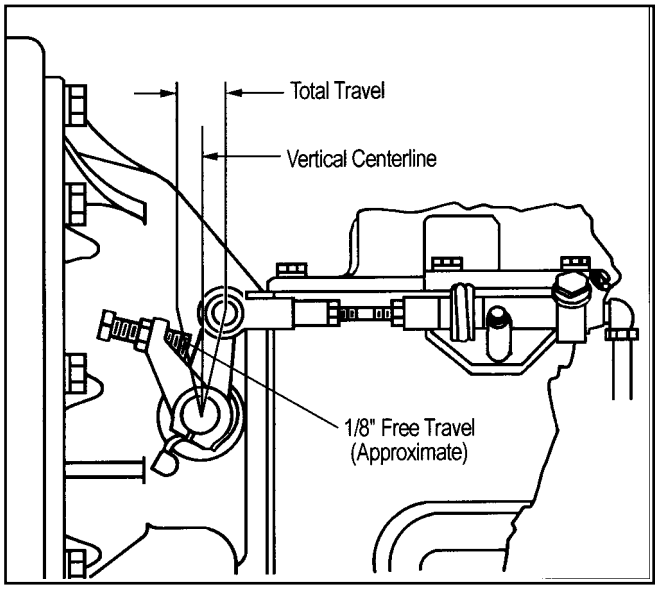

Figure 15. Typical Hydraulic Release Linkage

8. Following the preliminary adjustment of the pedal linkage, check the release bearing travel by pressing down on the clutch pedal. The release bearing housing should contact the transmission brake disc just before the clutch pedal makes contact with the floor board. Depress the pedal a few times and recheck the clearance stated in Paragraph 4.

LUBRICATION OF RELEASE BEARING

The release bearing rotates with the engine. Consequently, small amounts of high temperature lubricant should be applied at frequent intervals, preferably with engine idling. Suggested high temperature lubricants are “Alert #275; Andok “C”; Keystone #44; Lubrico M-31; Arm-Vac #781; Lidok #1 or #2; Nebula #1; Amdex #1 EP; Citco Premium Lithium #1; Gulf Crown Grease #1 EP; Mobile Grease #77; Alvania #1; Multifax #1 or #2 or equivalent.

DIMENSION “A” / FLYWHEEL SPECIFICATIONS

ASM Old Part Number	ASM NEW Part Number	Dimension “A” ± 1/8”	Flywheel Depth ± .005”
140-701-1514	140-701-1514	1 9/64”	1.860”
140-701-1681	140-701-1681	13/16”	Flat
140-702-1694	140-702-1694W*	13/16”	2.937”
140-702-1695	140-702-1965W*	13/16”	2.937”
140-702-1707	140-702-1707W*	13/16”	2.937”
140-702-1714	140-702-1714W**	13/16”	Flat
330-702-2070	330-702-2070W***	13/64”	Flat
380-702-1943	380-702-1943W#	1 1/16”	Flat
380-701-2038	380-701-2038	1 1/16”	Flat
380-701-2040	380-701-2040	1 1/16”	Flat
380-702-2054	380-702-2054W#	1 1/16”	Flat
380-702-2215	380-702-2215W#	1 1/16”	Flat

Intermediate Plate Thickness:

13” (330 mm) - 2 Plate	.682
14” (350 mm) - 2 Plate	.630
15” (380 mm) - 2 Plate	.750
15 1/2” (380 mm) - 2 Plate	.750

* C25-70 Intermediate Plate Required
** C25-67 Intermediate Plate Required
*** C25-94 Intermediate Plate Required
\# C25-92 Intermediate Plate Required

Note:

Tolerances for remanufactured clutches are the same as new clutches.

COMMON SERVICE PROBLEMS

Problem	Remedy
CHATTER	
1. Loose, broken or worn engine mounts	1. Tighten or replace
2. Worn pedal linkage	2. Replace linkage
3. Loose or cracked clutch housing	3. Tighten or replace
4. Spring shackles and mountings loose, worn or broken	4. Tighten or replace
5. Misalignment	5. Realign
6. Oil or grease on facings	6. Install new facings or disc assembly
7. Warped or bent driven disc assembly	7. Install new disc assembly
8. Improper disc facing thickness	8. Install proper disc assembly
9. Worn pilot bearing	9. Replace
10. Wrong spring pressure in cover assembly	10. Replace with proper cover assembly
11. Improper “A” dimension (Type ML Only)	11. Adjust for “A” dimension according to ML Service Manual
12. Unequal quantity of shims under straps of ML clutch	12. Use same quantity of shims under each strap
13. Release levers not parallel	13. Recheck installation
AGGRESSIVE	
1. Release sleeve dry (Type ML Only)	1. Lubricate release sleeve
2. Worn or loose pedal linkage	2. Replace or tighten
3. Excessive backlash in power train	3. Adjust or replace worn parts
4. Warped driven disc	4. Install new disc assembly
5. Worn hub splines	5. Install new disc assembly
6. Worn or rusty splines on input shaft	6. Replace shaft or install Haldex Spline-Saver disc kit
7. Improper facing material	7. Install proper disc assembly
8. Loose cera-metallic button facing	8. Replace facing or install new disc assembly
9. Burned cera-metallic button facing	9. Replace facing or install new disc assembly
INSUFFICIENT RELEASE	
1. Loose, broken or worn motor mounts	1. Tighten or replace
2. Worn or loose pedal linkage	2. Tighten or replace
3. Excessive idle speed	3. Adjust to factory specification
4. Loose or worn facings	4. Replace facings or install new disc assembly
5. Improper facing thickness	5. Install proper disc assembly
6. Warped or bent driven disc assembly	6. Properly install recommended disc assembly
7. Lever setting wrong	7. Refer to your Haldex Service Manual
8. Worn hub splines	8. Replace with new disc assembly
9. Worn or rusty splines or input shaft	9. Replace shaft or install Haldex Spline-Saver disc kit
10. Worn pilot bearing	10. Replace
11. Worn or cocked drive pins	11. replace or align
12. Insufficient release bearing travel	12. Repair or replace linkage
HARD PEDAL	
1. Worn pedal linkage	1. Replace with new linkage
2. Worn cross shaft, cross shaft bushing or yoke	2. Replace with new cross shaft, cross shaft bushing or yoke
3. Binding in pedal linkage (rod or cable)	3. Lubricate, adjust or replace
4. Excessive spring pressure in cover assembly	4. Install proper cover assembly
5. Contact pad of release bearing carrier worn by shifter yoke	5. Replace carrier and shifter yoke. Also check for proper alignment to provide best linkage operating positions.
SLIPPAGE	
1. Oil or grease on facing	1. Replace facing or install new disc assembly and correct oil leak
2. Loose or worn facings	2. Replace facings or install new disc assembly
3. Flywheel burned, checked, cracked or dished	3. Replace or regrind flywheel to manufacturer’s specifications
4. Insufficient plate pressure	4. Install new cover assembly
5. Improper “A” dimension (Type ML Only)	5. Adjust “A” dimension to proper height
6. Binding in pedal linkage	6. Lubricate and adjust
7. Improper facing material	7. Use correct facing or replace disc assembly
8. Incorrect flywheel depth	8. Replace or regrind flywheel to manufacturer’s specifications
9. Incorrect disc thickness	9. Replace facing or install new disc assembly
VIBRATION	
1. All or part of power train out of balance	1. Check each unit individually and recheck as a complete assembly
2. One or more units in power train out of alignment	2. Check and align (replace faulty component)
3. Worn splined shaft	3. Replace
4. Worn crankshaft bearings	4. Replace
5. Worn drive pins or slots	5. Replace drive pin, flywheel and or intermediate place
6. Worn or loose engine mounts	6. Replace or tighten
7. Loose or out of balance universal joint	7. Tighten or replace - check for balance
8. Clutch out of balance	8. Install balanced unit
9. Worn disc splines	9. Replace disc assembly

ADAPTER KIT INSTALLATIONS
14-2 DPB & DLB-PUSH TYPE
14-2 LP-PULL TYPE

Carefully inspect the flywheel for scores, heat cracks, taper and parallelism to the crankshaft mounting surface. Remachine if necessary. If the flywheel is severely heat checked or worn it should be replaced.

A pair of standard 3/8"-16 cap screws 3" long should be used as pilots. Cut the heads from these cap screws, saw a screwdriver slot in the end and install them in opposite holes in the flywheel. These pilots will support the adapter ring as the clutch is being installed.

Position the adapter ring on the flywheel, insuring that the ventilating slots are on the flywheel side. The slots for the intermediate plate must face the transmission.

With a spline alignment tool, align the drive discs and intermediate plate on the flywheel adapter ring. Attach the clutch cover assembly to the flywheel using the 12 cap screws provided in the adapter kit. Do not tighten any cap screws until all 12 have been installed and finger tight.

On remachined flywheels, be sure the counterbores are still deep enough to allow secure tightening of the cover assembly and adapter ring to the flywheel.

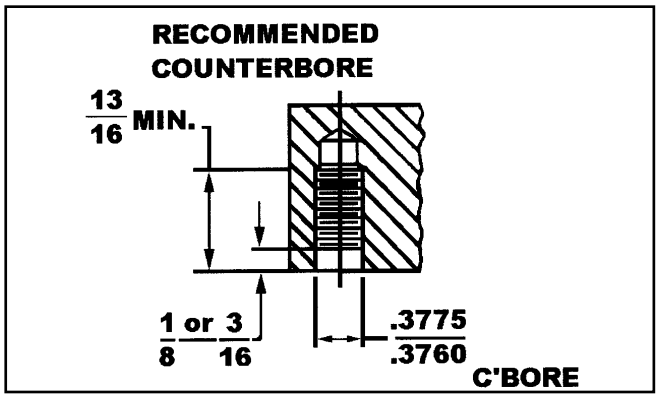

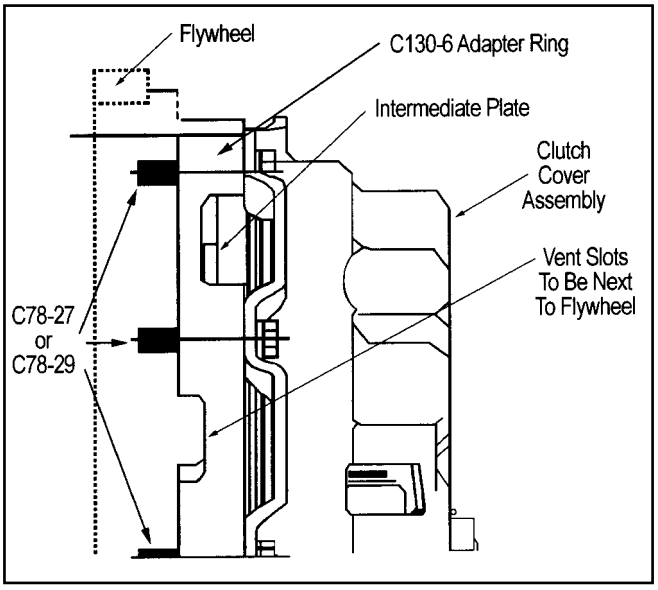

Figure 1. 14-2 Plate DPB & DLB (Push Type)

The AK-206 Kit has (12) C78-29 cap screws 2-1/8" long and can only be used on flywheels with 3/16" deep couterbores.

The AK-208 Kit has (12) C78-27 cap screws 2" long and is intended for flywheels with counterbores 1/8" deep.

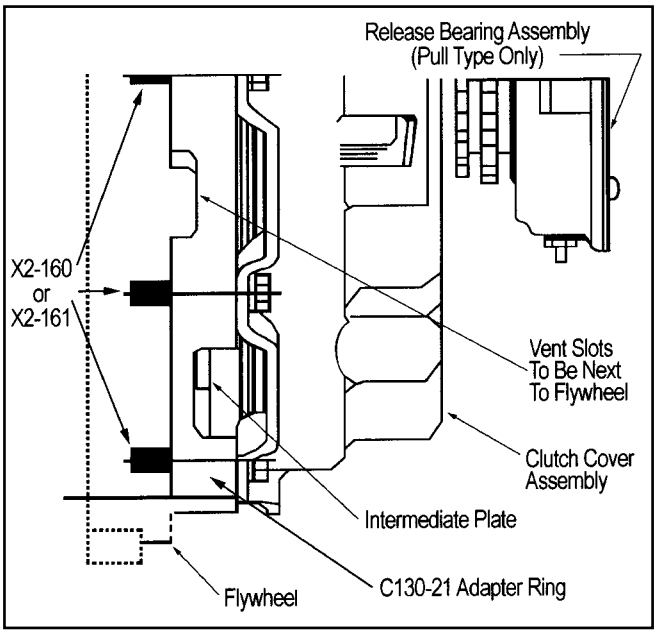

Figure 2. 14-2 Plate LP (Pull Type)

The AK-285 Kit has (12) X2-160 cap screws 2-1/4" long and can only be used on flywheels with 3/16" deep couterbores. (AK-285 must not be installed in Caterpillar powered applications.

The AK-286 Kit has (12) X2-161 cap screws 2-1/2" long and is intended for flywheels with counterbores 3/16" deep. (AK-186 is intended for Caterpillar powered applications only.)

ADAPTER KIT INSTALLATIONS 13/330-2 PLATE POT/RECESS AND FLAT FLYWHEELS

Installation Notes:

1. Carefully inspect the flywheel - remachine or replace as required.

2. The 330 cover assembly must be positioned on the flywheel or adapter ring so that the section of the cover labeled "Align Lug Here" is directly over one drive lug of the intermediate plate.

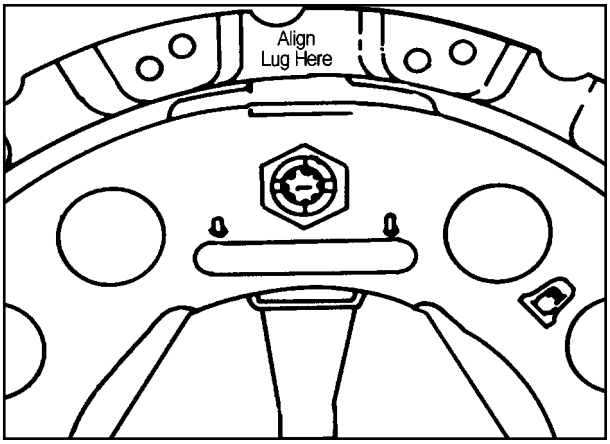

Pot/Recess Flywheels

3. The distance between the cover mounting surface and the flywheel friction surface must be within a specified dimension (pot depth).

Flat Flywheels

4. The cover assembly mounting bolt holes must conform to the following specifications.

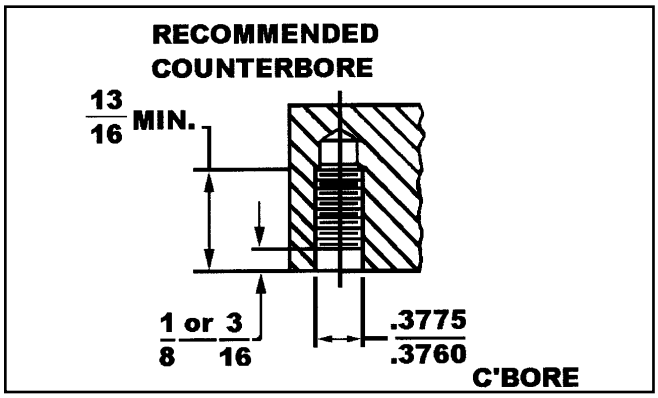

5. On flat flywheels that are equipped with only eight cap screw holes use the adapter ring as a template to drill the additional four mounting holes. Use a 3/8" drill to spot the hole location, then drill with 5/16" bit and complete by tapping the holes with a 3/18-16 tap. Be sure to install the ring in the same position as when originally spotted to assure alignment.

6. The 330 two plate on flat flywheel requires an adapter ring. Order adapter ring according to flywheel bolt circle as indicated here:

Bolt Circle	Adapter Kit No.	Adapter Ring No.	Cap Screws Qty/C78-XXX
14.125"	AK-313	C130-12	12(27)
14.500"	AK-314	C130-7	12(27)
14.625"	AK-315	C130-11	12(31)

7. Position the adapter ring with the ventilating slots next to the flywheel.

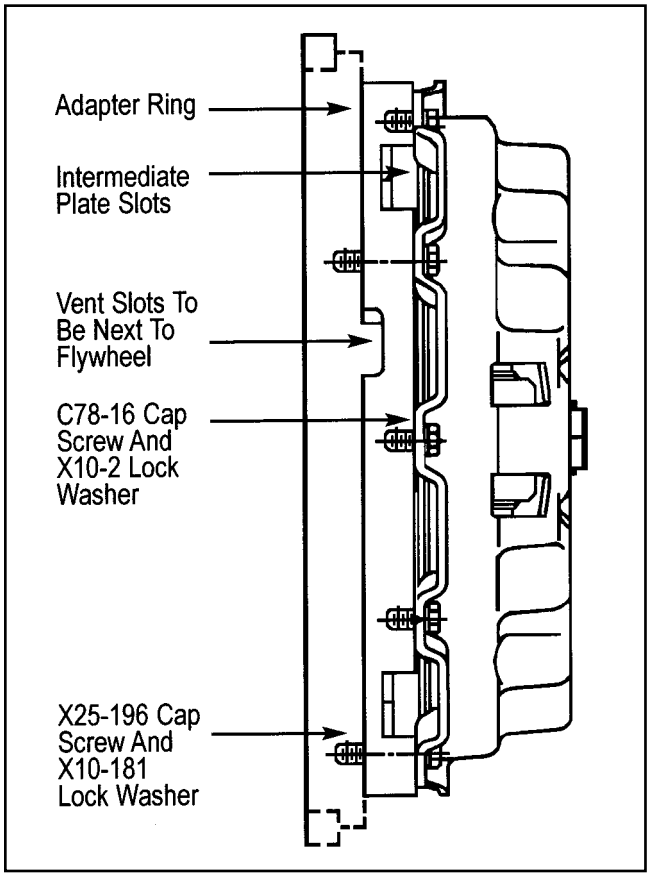

8. The intermediate plate that is used with an adapter ring is directional and must be installed as labeled.

9. If the 330 cover assembly is to be utilized with an existing adapter ring, the customer must purchase separately the C78-XXX cap screw. (See chart above.)

To Ease Installation

A pair of standard 3/8"-16 cap screws 3" long should be used as pilots. Cut the heads from these cap screws, saw a screwdriver slot in the end and install them in opposite holes in the flywheel. These pilots will support the adapter ring as the clutch is being installed.

NOTES:

Austria
Haldex Wien Ges.m.b.H.
Vienna
Tel:: +43 1 8 65 16 40
Fax: +43 1 8 65 16 40 27
E-Mail: info.austria@haldex.com

Belgium
Haldex N.V./S.A.
Balegem (Ghent)
Tel.: +32 9 363 90 00
Fax: +32 9 363 90 09
E-Mail: info.hbe@haldex.com

Brazil
Haldex do Brasil Ind. e Com, Ltda.
São Paulo
Tel.: +55 11 213 55 000
Fax: +55 11 503 49 515
E-Mail: info@hbr.haldex.com

Canada
Haldex Ltd
Guelph, Ontario
Tel.: +1 519 826 7723
Fax :+1 519 826 9497
E-Mail: CSCanada@haldex.com

China
Haldex International Trading Co. Ltd.
Shanghai
Tel.: +86 21 5240 0338
Fax: +86 21 5240 0177
E-Mail: info@hcn.haldex.com

France
Haldex Europe SAS
Weyersheim (Strasbourg)
Tel.: +33 3 88 68 22 00
Fax: +33 3 88 68 22 09
E-Mail: info.heu@haldex.com

Germany
Haldex Brake Products GmbH
Heidelberg
Tel.: +49 6221 7030
Fax: +49 6221 703400
E-Mail: info@haldex.com

Hungary
Haldex Hungary Kft.
Szentlörinckáta
Tel.: +36 29 631 300
Fax: +36 29 631 301
E-Mail: info.hu.eu@haldex.com

India
Haldex India Limited
Nasik
Tel.: +91 253 2380094
Fax +91 253 2380729
E-Mail: haldex@haldexindialtd.com

Italy
Haldex Italia Srl.
Muggio (Milano)
Tel.: +39 039 278 23 50
Fax: +39 039 796 525
E-Mail: info@hit.haldex.com

Poland
Haldex Sp. z.o.o.
Praszka
Tel.: +48 34 350 11 00
Fax: +48 34 350 11 11
E-Mail: info@haldex.net.pl

Russia
OOO Haldex RUS
Moscow
Tel.: + 7 495 747 59 56
Fax: +7 495 786 39 70
E-Mail: info.russia@haldex.com

South Korea
Haldex Korea Ltd.
Seoul
Tel.: +82 2 2636 7545
Fax: +82 2 2636 7548
E-Mail: info.hkr@haldex.com

Spain
Haldex España S.A.
Parets del Valles (Barcelona)
Tel.: +34 93 573 10 30
Fax: +34 93 573 07 28
E-Mail: haldexespana@haldex.com

Sweden
Haldex Brake Products AB
Landskrona
Tel.: +46 418 47 60 00
Fax: +46 418 47 60 01
E-Mail: info@hbpse.haldex.com

United Kingdom
Haldex Ltd.
Newton Aycliffe
Tel.: +44 1325 310 110
Fax: +44 1325 311 834
E-Mail: aycliffe.info@haldex.com

Haldex Brake Products Ltd.
Redditch
Tel.: +44 1527 499 499
Fax: +44 1527 499 500
E-Mail: info@haldex.com

USA
Haldex Brake Products Corp.
Kansas City, MO
Tel.: +1 816 891 2470
Fax: +1 816 891 9447
E-Mail: hbsna@haldex.com

©2007, This material may contain Haldex trademarks and third party trademarks, trade names, corporate logos, graphics and emblems which are the property of their respective companies. The contents of this document may not be copied, distributed, adapted or displayed for commercial purposes or otherwise without prior written consent from Haldex.

Haldex

Commercial Vehicle Systems

www.haldex.com

LL30002 US 3/07 2.5M ART (Last Rev. 7/03)