ModulX®
Service Parts Catalog

L00128W Rev. 7/11

Air Disc Brakes

www.haldex.com

Table Of Contents

.About this Parts Catalog 1
Product Identification. 1
ModulX® Air Disc Brake Component List 2
Air Disc Brake Exploded Views 2
Air Disc Brake Kit Contents 3
ModulX® Air Disc Brake Service Parts
    Brake Pad Kits 4
    Caliper Service Kits 5
    Tool Kit 7
    Rotors 7
    Actuators 8
Part Number Cross Reference. 9

The description and specifications contained in this service publication are current at the time of printing. Haldex Brake Products Corp. reserves the right to discontinue or modify its models and/or procedures and to change specifications at any time without notice.

About this Parts Catalog

Haldex Commercial Vehicle Systems, Brake Products Division, presents this Parts Catalog as a guideline in the identification and procurement of service parts for Haldex's ModulX® Air Disc Brake. The service kits included cover the most commonly used parts for disc brake calipers and related parts.

These kits contain the necessary parts needed to service the Haldex ModulX® Air Disc Brake Caliper and are conveniently packaged for order, stock, and identification, thus allowing you to better serve your customer's requirements.

Haldex service parts meet the same high quality standards found in the original components, and are backed by a responsive and capable service organization.

Product Identification

When servicing Haldex disc brakes, the instructions given in Haldex ModulX® Disc Brake Service Manual (L30039) must be followed.

Product Identification Type and Serial Numbers are stamped on an identification plate fixed to the caliper (see diagram below). The plate provides the following information:

1. OEM / Haldex Logo
2. OEM P/N (if required)
3. Haldex (origin)
4. Haldex P/N xxxxx
5. Haldex S/N 226123 (example)
   2 = year, 2002
   26 = week number
   123 = sequential number

OR

Haldex S/N 2261234 (example)
2 = year, 2002
26 = week number
1234 = sequential number

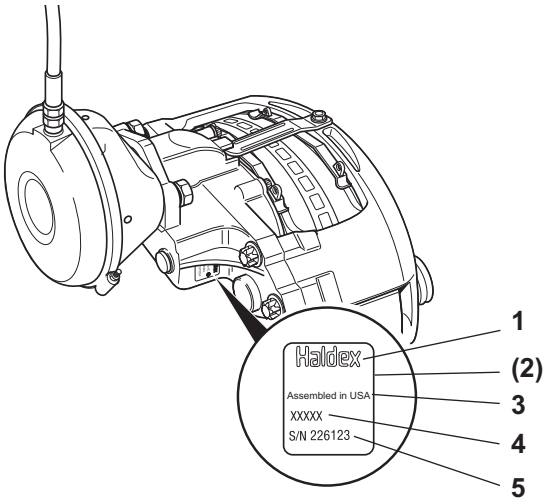

ModulX® Air Disc Brake Component List

1. Caliper Housing
2. Protection Boots
3. Pad
4. Caliper Bridge
5. Carrier
6. Adjustment Shaft
7. Slide Pin
8. Protection Cup
9. Slide Bushing
10. Locking Tab
11. Pad Retainer
12. Pad Spring
13. Plug
14. Protection Cap
15. Radial Seal
16. Slide Pin Attaching Bolt
17. Bolt
18. Torx Bolt
19. Bushing, Gen 2 Mechanism

20A. Adjuster Screw, Gen 1 Mechanism
20B. Adjuster Screw, Gen 2 Mechanism

21. Protection Boot
22. Clip, Thrust Plate, Gen 1 Mechanism
23. Protection Spring, Gen 1 Mechanism

24A. Thrust Plate, Gen 1 Mechanism
24B. Thrust Plate, Gen 2 Mechanism

Mechanism - Gen 1

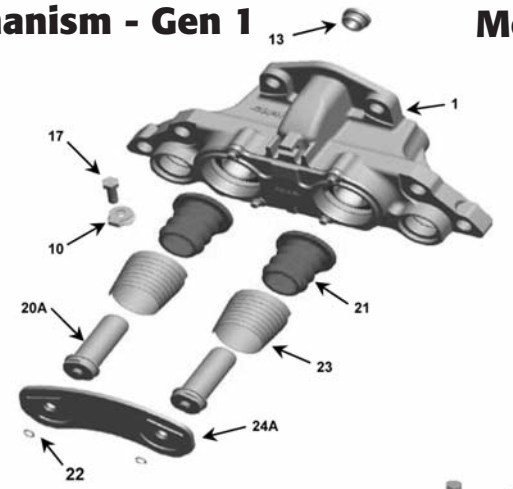

Mechanism - Gen 2

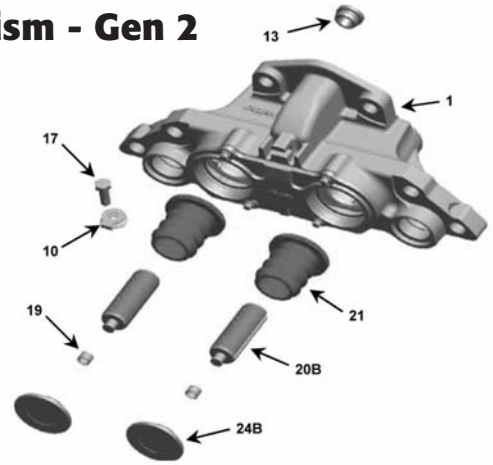

Air Disc Brake

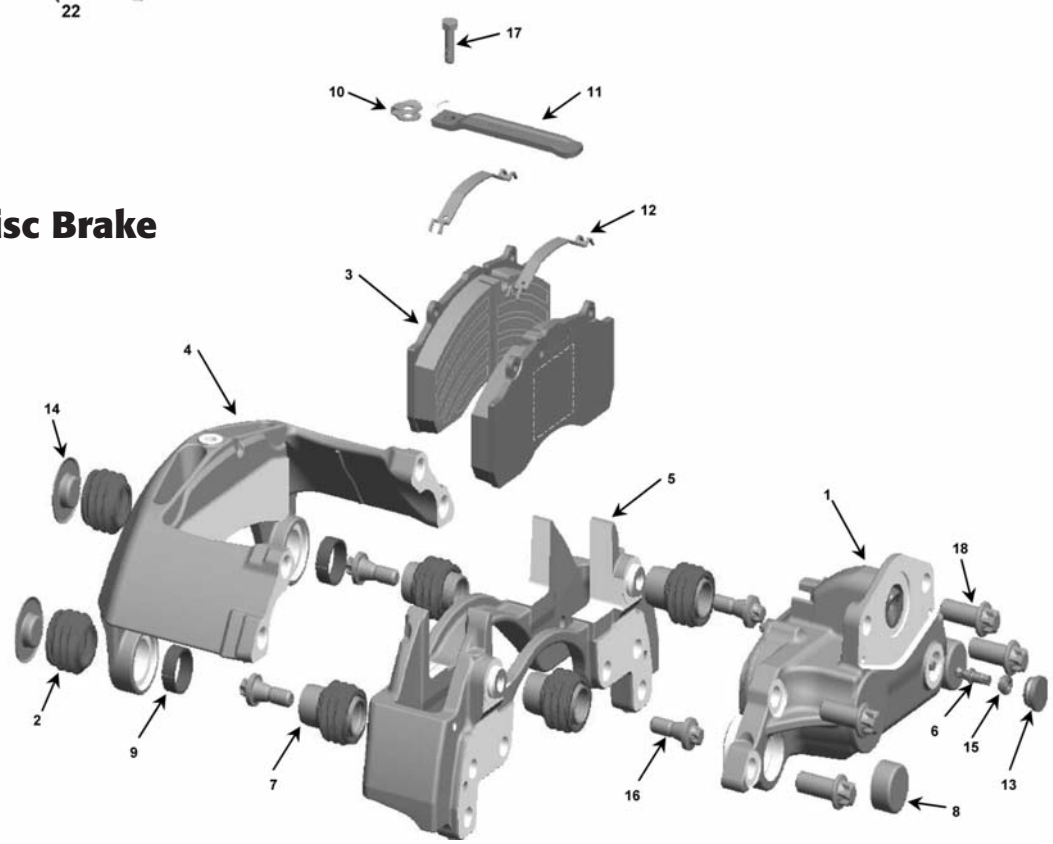

ModulX® Air Disc Brake Caliper Service Kits

Service Kit Description	Kit #	(Quantity) Component Numbers
Air Disc Brake Pad Service Kits (1 Wheel End)		
Brake Pad Kit for DB22, HX65	790-22008	(2) 3, (1) 10, (2) 12, (1) 13, (1) 17
Brake Pad Kit for Dana Spicer ESD 225	790-22012	(2 3, (1) 10, (2) 12, (1) 13, (1) 17
Brake Pad Kit for DB22, Jurid 539-20	790-22031	(2) 3, (1) 10, (2) 12, (1) 13, (1) 17
Brake Pad Kit for DB22LT, Jurid 539-20	790-22040	(2) 3, (1) 10, (2) 12, (1) 13, (1) 17
Air Disc Brake General Service Kits (1 Wheel End)		
Seal Kit, Sliding Function	790-94660	(2) 6, (2) 8, (4) 9, (1) 13, (2) 14, (4) 16
Seal Kit for Application Unit	790-94662	(1) 13, (2) 19, (2) 21, (2) 22
Thrust Plate Kit for Gen 1 Mechanism	790-94664	(1) 13, (2) 19, (2) 20A, (2) 21, (2) 22, (1) 24A
Protection Springs for Application Unit	790-94665	(2) 19, (2) 22, (2) 23
Adjustment Hex Seal Kit with Shaft	790-94892	(1) 6, (1) 13, (1) 15
Pad Assembly Kit	790-94897	(1) 10, (1) 11, (2) 12, (2) 17
Miscellaneous		
Basic Tool Kit	791-1000	(1) tool kit
Rotor, Gunite, 430mm U-Shape	R6206M	(1) rotor
Air Disc Brake Actuator Service Kits		
Gold Seal® Double Diaphragm Spring Brake for ADB, size 20/24	GC2024D	(1) unit with fasteners
Gold Seal® Double Diaphragm Spring Brake for ADB, size 20/30	GC2030D	(1) unit with fasteners
Gold Seal® Double Diaphragm Spring Brake for ADB, size 24/30	GC2430D	(1) unit with fasteners
Life Seal® Double Diaphragm Spring Brake for ADB, size 20/30	LC2030D	(1) unit with fasteners
Life Seal® Double Diaphragm Spring Brake for ADB, size 24/30	LC2430D	(1) unit with fasteners
Service Chamber for ADB, type 20	SC20D	(1) unit with fasteners
Service Chamber for ADB, type 24	SC24D	(1) unit with fasteners

ModulX® Air Disc Brake Pad Kits

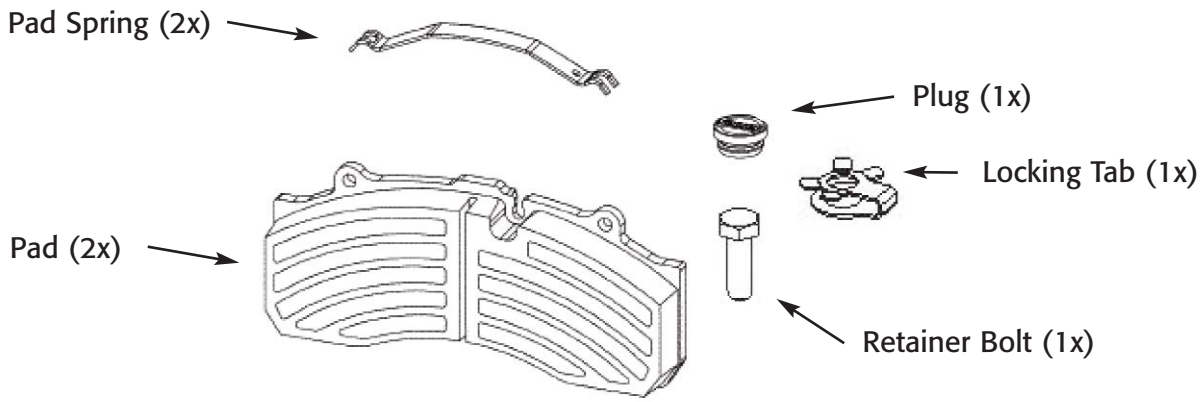

Pad Kit #	Model/Friction	Used with OEM Caliper Part #
790-22008	DB22 / HX65	90736, 91095, 91435, 92802, 94051
790-22012	ESD225 / 7A1	Dana Spicer ESD225
790-22031	DB22 / Jurid 539-20	92800, 94052
790-22040	DB22LT / Jurid 539-20	94027, 94830

ModulX® Air Disc Brake Caliper Service Kits

Kit# 790-94660
Seal Kit, Sliding Function
(1 Wheel End)

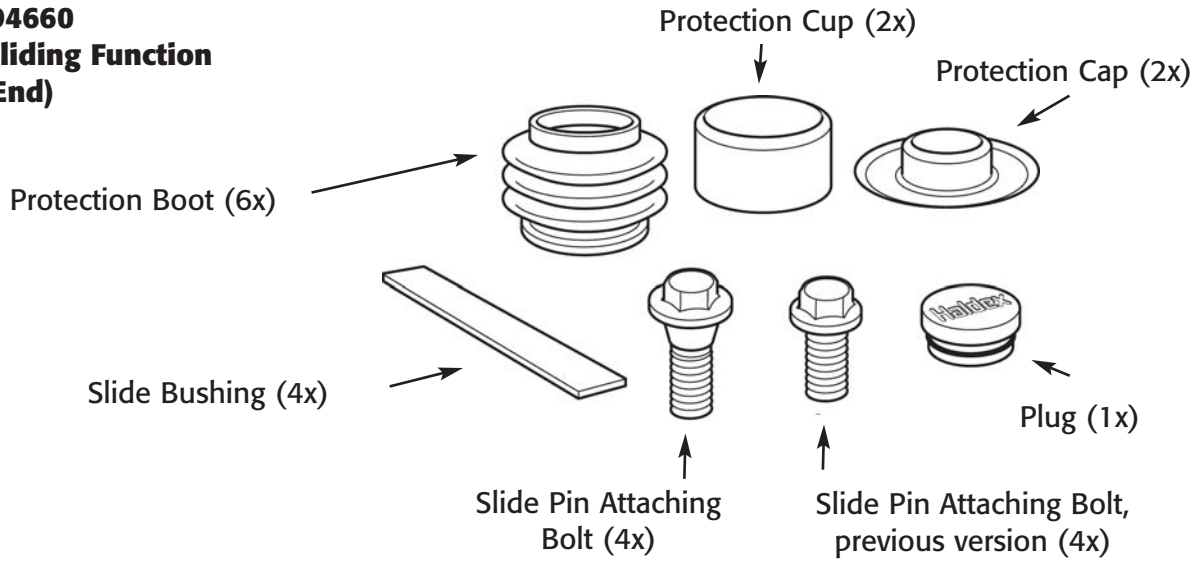

Kit# 790-94662
Seal Kit for Application Unit
(1 Wheel End)

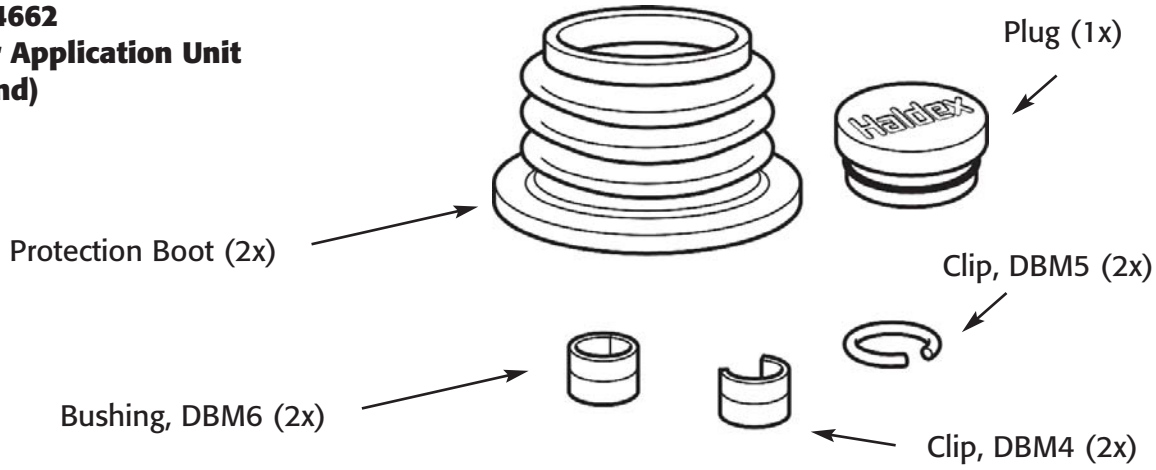

Kit # 790-94664
Thrust Plate Kit for Gen 1 Mechanism (DBM5)
(1 Wheel End)

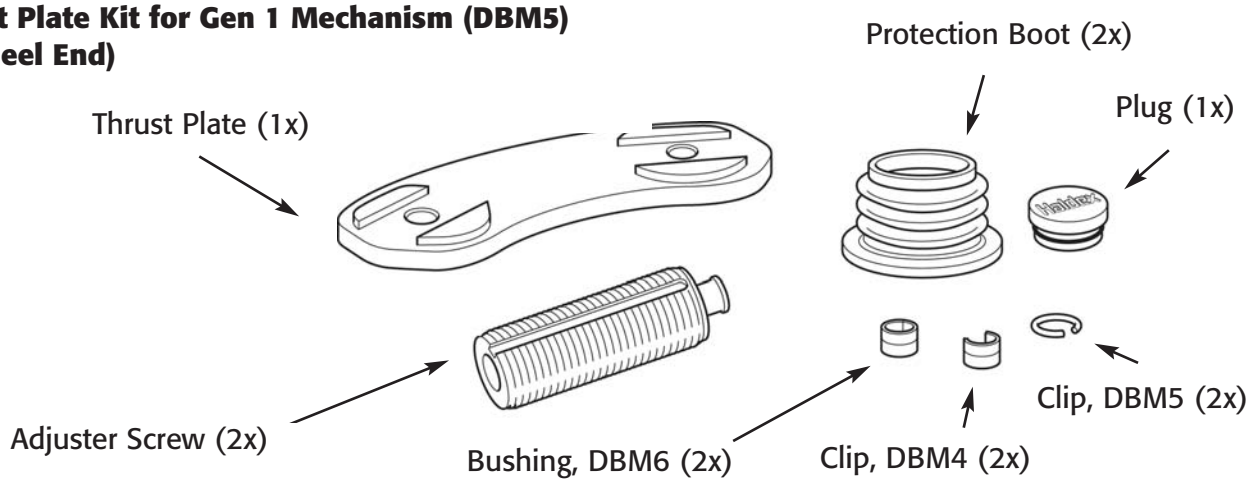

ModulX® Air Disc Brake Caliper Service Kits

Kit# 790-94665
Protection Springs for Application Unit
(1 Wheel End)

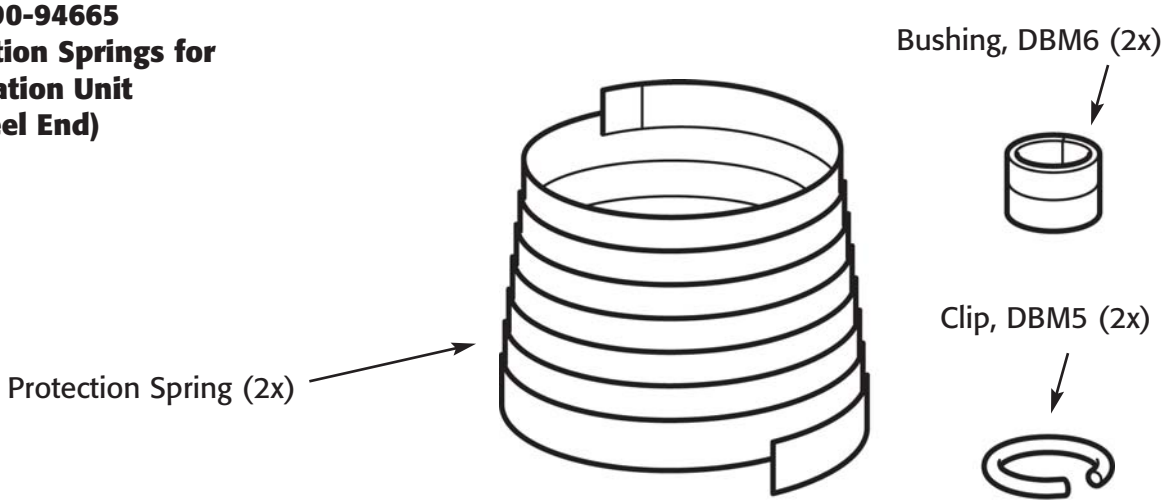

Kit # 790-94892
Adjustment Hex Seal Kit with Shaft
(1 Wheel End)

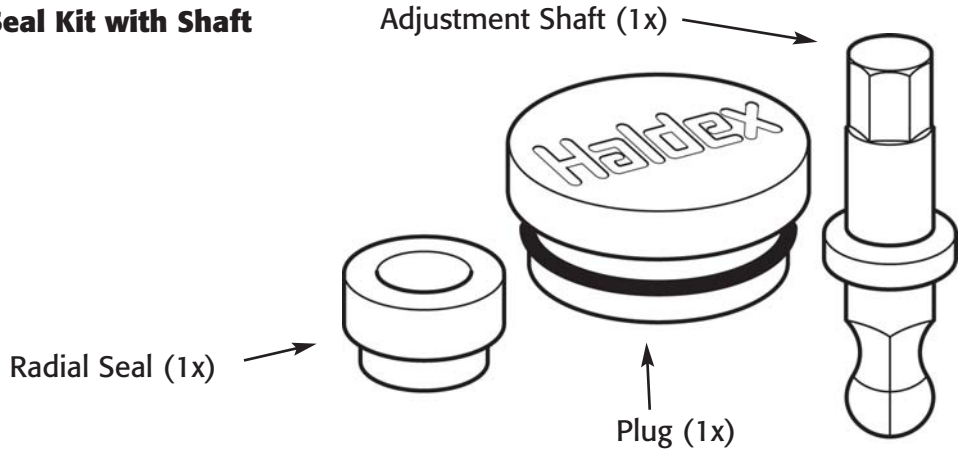

Kit # 790-94897
Pad Assembly Kit
(1 Wheel End)

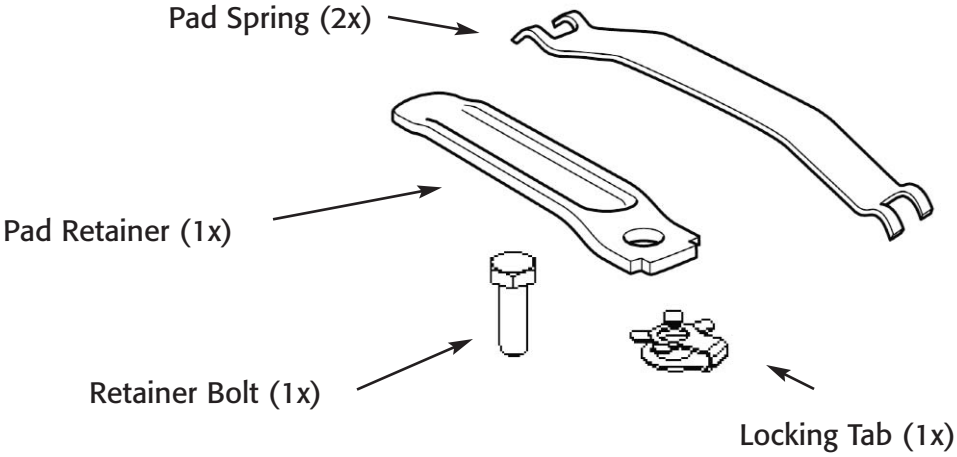

ModulX® DB22 Air Disc Brake Service Kits

Kit# 791-1000
ModulX® Tool Kit

Item#	Tool Description	For Use with Service Kit#
1	Slide pin boot assembly tool	790-94660
2	Press tool for adjustment hex seal	790-94892
3	Guide bushing assembly tool	790-94660
4	Circlip assembly tool	790-94662 790-94664 790-94665

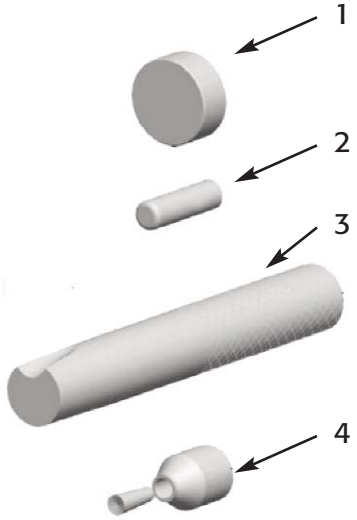

Kit# R6206M
Rotor, Gunite® 430mm U-Shape

Actuator Service Parts for Air Disc Brakes

Service Part #	Description
SC20D	Service Chamber, Type 20
SC24D	Service Chamber, Type 24
GC2024D	Gold Seal® Double Diaphragm Spring Brake size 20/24
GC2030D	Gold Seal® Double Diaphragm Spring Brake size 20/30
GC2430D	Gold Seal® Double Diaphragm Spring Brake size 24/30
LC2030D	Life Seal® Double Diaphragm Spring Brake size 20/30
LC2430D	Life Seal® Double Diaphragm Spring Brake size 24/30

ModulX® Air Disc Brake Cross Reference

Air Disc Brake Caliper Assemblies

OEM Part #	Model / Generation	Caliper Part #	Pad Kit #
90736	DB22 / Gen 1	Not Available	790-22008
91095	DB22 / Gen 2	Not Available	790-22008
91435	DB22 / Gen 1	Not Available	790-22008
92800	DB22 / Gen 2	Not Available	790-22031
92802	DB22 / Gen 2	Not Available	790-22008
93672	DB22 / Gen 2	Not Available	790-22008
94027	DB22LT / Gen 2	Not Available	790-22040
94030	DB19 / Gen 2	Not Available	790-22050
94050	DB22 / Gen 2	Not Available	check original pad part #
94051	DB22 / Gen 2	Not Available	790-22008
94052	DB22 / Gen 2	Not Available	790-22031
94795	DB22LT / Gen 2	Not Available	check original pad part #
94828	DB22LT / Gen 2	Not Available	check original pad part #
94830	DB22LT / Gen 2	Not Available	790-22040
94918	DB22 / Gen 2	Not Available	check original pad part #
94922	DB22LT / Gen 2	Not Available	check original pad part #
ESD225	Dana Spicer ESD225	Not Available	790-22012

Air Disc Brake Pads

Pad Part #	Friction / Caliper Model	Pad Kit #	Comments
89659	Jurid 539-20 / DB22	790-22031	
91059	Jurid 539-20 / DB22LT	790-22040	
91567	HX65 / DB22	790-22008	
92822	HX65 / DB22LT	N/A	contact Haldex
751-22001	7A1 / ESD225	790-22012	

Actuators for Air Disc Brakes

OEM Part #	Model / Orientation	Service Part #	Comments
125200101	T20 Service Chamber	SC20D	
125240101	T24 Service Chamber	SC24D	
1352024007	Gold Seal® 2024 / Underslung	GC2024D	
1352024008	Gold Seal® 2024 / Right	GC2024D	
1352024009	Gold Seal® 2024 / Left	GC2024D	
1352430101	Gold Seal® 2430 / Dana	GC2430D	
1352430102	Gold Seal® 2430 / Dana	GC2430D	
1352430103	Gold Seal® 2430 / Dana	GC2430D	
1352430104	Gold Seal® 2430 / Underslung	GC2430D	
1352430105	Gold Seal® 2430 / Right	GC2430D	
1352430106	Gold Seal® 2430 / Left	GC2430D	
1452030001	Life Seal® 2030 / Right	LC2030D	
1452030002	Life Seal® 2030 / Left	LC2030D	
1452030005	Life Seal® 2030 / Underslung	LC2030D	
1452430001	Life Seal® 2430 / Right	LC2430D	
1452430002	Life Seal® 2430 / Left	LC2430D	
1452430005	Life Seal® 2430 / Underslung	LC2430D	

Haldex (www.haldex.com), headquartered in Stockholm, Sweden, is a provider of proprietary and innovative solutions to the global vehicle industry, with focus on products in vehicles that enhance safety, environment and vehicle dynamics.

Haldex is listed on the Stockholm Stock Exchange. Haldex has a yearly turnover of close to 5.6 billion SEK and employs 4,300 people.

Disclaimer: The products described within this literature, including without limitation, product features, specifications, designs, availability and pricing are subject to change by Haldex and its subsidiaries at any time without notice.

This document and other information from Haldex, its subsidiaries and authorized distributors provide product and/or system options for further investigation by users having technical expertise. It is important that you analyze all aspects of your application and review the information concerning the product or system, in the current literature or catalog. Due to the variety of operating conditions and applications for these products or systems, the user, through their own analysis and testing, is solely responsible for making the final selection of the products and systems and assuring that all performance, safety and warning requirements are met.

©2010, Haldex AB - This material may contain Haldex trademarks and third party trademarks, trade names, corporate logos, graphics and emblems which are the property of their respective companies. The contents of this document may not be copied, distributed, adapted or displayed for commercial purposes or otherwise without prior written consent from Haldex.

Austria
Haldex Wien Ges.m.b.H.
Vienna
Tel.: +43 1 8 69 27 97
Fax: +43 1 8 69 27 97 27
E-Mail: info.AT@haldex.com

Belgium
Haldex N.V.
Balegem
Tel.: +32 9 363 90 00
Fax: +32 9 363 90 09
E-Mail: info.BE@haldex.com

Brazil
Haldex do Brasil Ind. e Com. Ltda.
São Paulo
Tel.: +55 11 213 55 000
Fax: +55 11 503 49 515
E-Mail: info.BR@haldex.com

Canada
Haldex Ltd.
Cambridge, Ontario
Tel.: +1 519 621 6722
Fax: +1 519 621 3924
E-Mail: info.CA@haldex.com

China
Haldex International Trading Co. Ltd.
Shanghai
Tel.: +86 21 5240 0338
Fax: +86 21 5240 0177
E-Mail: info.CN@haldex.com

France
Haldex Europe SAS
Weyersheim (Strasbourg)
Tel.: +33 3 88 68 22 00
Fax: +33 3 88 68 22 09
E-Mail: info.EUR@haldex.com

Germany
Haldex Brake Products GmbH
Heidelberg
Tel.: +49 6 221 7030
Fax: +49 6 221 703400
E-Mail: info.DE@haldex.com

Hungary
Haldex Hungary Kft.
Szentlörinckáta
Tel.: +36 29 631 300
Fax: +36 29 631 301
E-Mail: info.HU@haldex.com

India
Haldex India Limited
Nasik
Tel.: +91 253 2380094
Fax: +91 253 2380729

Italy
Haldex Italia Srl.
Biassono (Milan)
Tel.: +39 039 47 17 02
Fax: +39 039 27 54 309
E-Mail: info.IT@haldex.com

Korea
Haldex Korea Ltd.
Seoul
Tel.: +82 2 2636 7545
Fax: +82 2 2636 7548
E-Mail: info.HKR@haldex.com

Mexico
Haldex de Mexico S.A. De C.V.
Monterrey
Tel.: +52 81 8156 9500
Fax: +52 81 8313 7090

Poland
Haldex Sp. z.o.o.
Praszka
Tel.: +48 34 350 11 00
Fax: +48 34 350 11 11
E-Mail: info.PL@haldex.com

Russia
OOO "Haldex RUS"
Moscow
Tel.: +7 495 747 59 56
Fax: +7 495 786 39 70
E-Mail: info.RU@haldex.com

Spain
Haldex España S.A.
Granollers
Tel.: +34 93 84 07 239
Fax: +34 93 84 91 218
E-Mail: info.ES@haldex.com

Sweden
Haldex Brake Products AB
Landskrona
Tel.: +46 418 47 60 00
Fax: +46 418 47 60 01
E-Mail: info.SE@haldex.com

United Kingdom
Haldex Ltd.
Newton Aycliffe
Tel.: +44 1325 310 110
Fax: +44 1325 311 834
E-Mail: info.GBAy@haldex.com

Haldex Brake Products Ltd.
Redditch
Tel.: +44 1527 499 499
Fax: +44 1527 499 500
E-Mail: info.GBRe@haldex.com

USA
Haldex Brake Products Corp.
Kansas City
Tel.: +1 816 891 2470
Fax: +1 816 891 9447
E-Mail: info.US@haldex.com

Haldex

Commercial Vehicle Systems

www.haldex.com

L00128W US REV 7/11 ART ONLY