© THIS DOCUMENT IS THE PROPERTY OF THE HALDEX GROUP. AND CONTAINS CONFIDENTIAL AND PROPRIETARY INFORMATION THAT CANNOT BE REPRODUCED. UTILIZED OR DIVULGED. IN WHOLE OR IN PART. WITHOUT WRITTEN AUTHORIZATION

REV	CHANGE DESCRIPTION AND ORDER NUMBER	DATE	CHANGED	CHECKED	APPROVED
02	02352	2023-02-08	MN844	JG1031	JG1031

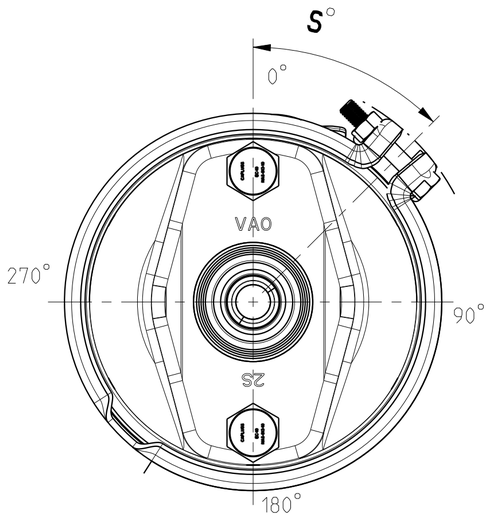

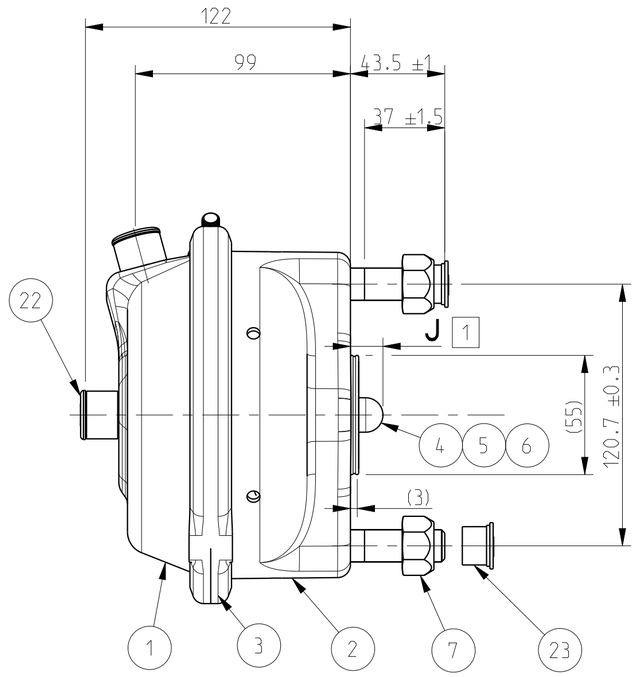

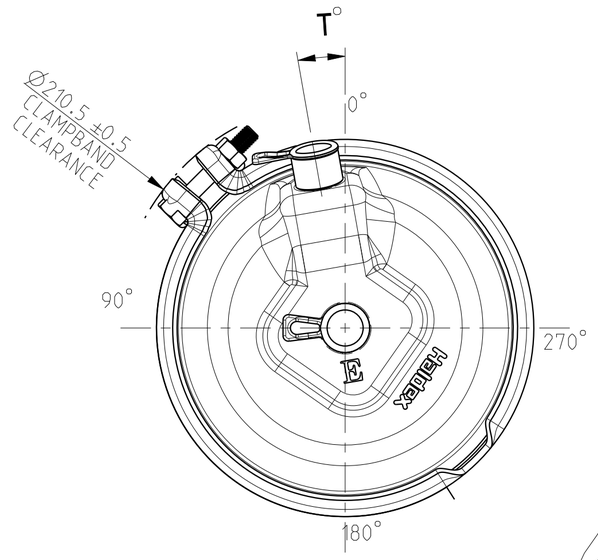

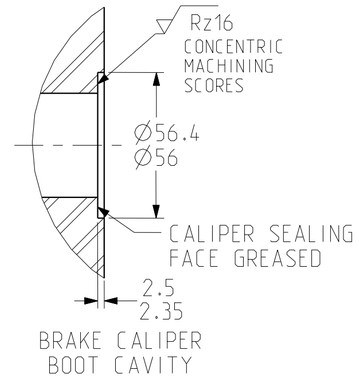

TORQUE TABLE

ITEM	N m
M16 MOUTING NUTS	180-210
M16 PORT FITTINGS	35-40

INTENDED FOR DISC BRAKE TRAILER APPLICATIONS WITH MAXIMUM 64MM STROKE

SERVICE CHAMBER: OPERATING PRESSURE: 8.5BAR
TEMPORARILY :10.2BAR

PISTON RETURN SPRING SERVICE SIDE, MINIMUM RETURN FORCE: 180±30N

ACTUATOR MAY BE INSTALLED ON THE VEHICLE WITH MOUNTING STUDS ORIENTED IN ANY POSITION

UNIT SHOWN IN BRAKE RELEASED POSITION

MISALIGNMENT OF THE PUSHROD IN ANY POSITION: 4°

1 DIMENSION IS WITH THE UNIT IN BRAKE RELEASED POSITION

SERVICE CHAMBER PERFORMANCE T-20

ACCORDING TO TÜV BC 0175

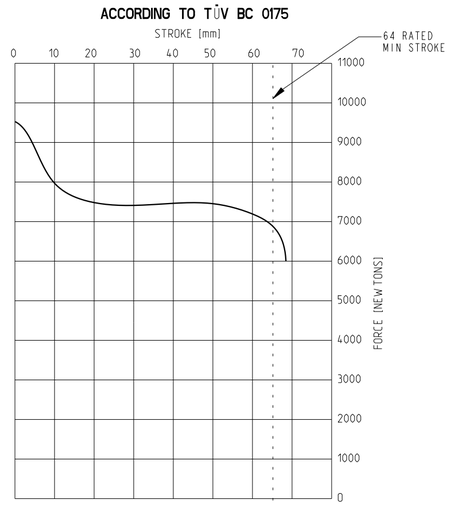

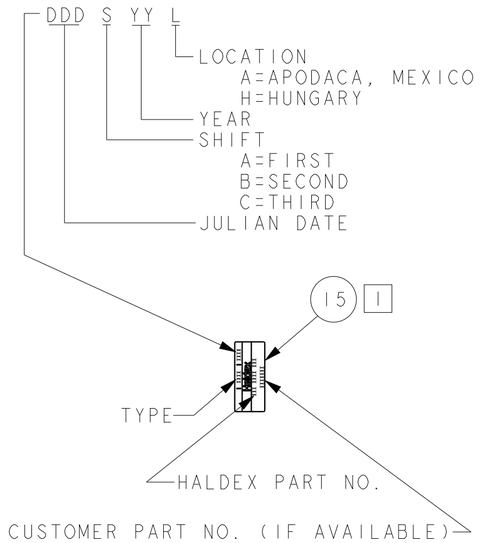

ITEM	DESCRIPTION
23	PROTECTOR END
22	PROTECTOR PORT
15	LABEL
7	LOCK NUT M16X1,5
6	WASHER SHIM 0,5
5	WASHER SHIM
4	ROD END SPHERICAL
3	CLAMPBAND ASSY
2	SERVICE HOUSING ASSY
1	PRESSURE HOUSING T-16

125200601	M16X1.5	M16X1.5	WITH	YES	NO	15	0°	YES	45°	
PART NUMBER	SPT	EPT	ITEM 7 NUT	ITEM 22 THREAD PROTECTOR	ITEM 23 STUD PROTECTOR	J DIM ±0,5	T ±3° PORTS	ITEM 3 CLAMPBAND	S ±3° CLAMPBAND	REL
	PORT SIZE									

TOLERANCES UNLESS OTHERWISE SPECIFIED ISO 2768-v	DOC TYPE ASSEM	SCALE 1:2	MATERIAL	
THIS DOCUMENT USES SPECIAL CHARACTERISTICS AS DEFINED IN PROCEDURE HDX2-3-364	DRAWN MN844	DATE 2021-11-29	WEIGHT [ONLY FOR INFO.] 3.250 kg	DIMENSION IN mm DO NOT SCALE DRAWING
Haldex HALDEX BRAKE PRODUCTS AB LANDSKRONA SWEDEN	CHECKED JG1031	DATE 2022-02-03	TITLE Service chamber Disc T20	
	APPROVED JG1031	DATE 2022-02-09	ITEM NUMBER 125200601	PROJECTION / SHEET 1(1) / FORMAT A2

GENERIC MODEL (INFO ONLY): 125200601GENERIC