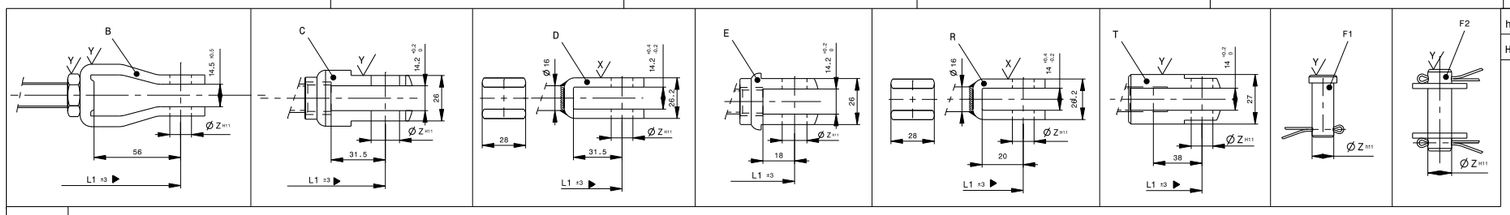

h11	$^{0}_{-0.11}$
H11	$^{+0.11}_{0}$

THIS DOCUMENT IS THE PROPERTY OF THE HALDEX GROUP, AND CONTAINS CONFIDENTIAL AND PROPRIETARY INFORMATION THAT CANNOT BE REPRODUCED, UTILIZED OR DIVULGED, IN WHOLE OR IN PART, WITHOUT WRITTEN AUTHORIZATION

REV	CHANGE DESCRIPTION AND ORDER NUMBER	DATE	CHANGED	CHECKED	APPROVED
K	ADDED HALDEX FRAME.	02.28.22	A.CENGIZ	CY.AZAP	O.BUZ

2 ⋈
13 ▶ ANA RESIMDE ORTAK OLCULER VERILMISTIR, OZEL OLCULER ICIN GOSTERIMLERE VE TABLOYA BAKINIZ.
MAIN VIEWS SHOW COMMON DIMENSIONS ONLY,SEE REPRESENTATIONS AND TABLE FOR SPECIFIC DIMENSIONS.

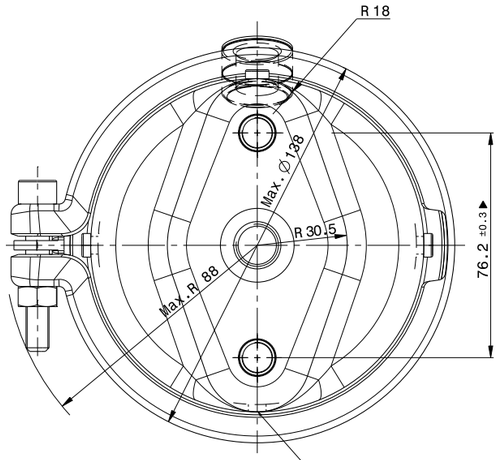

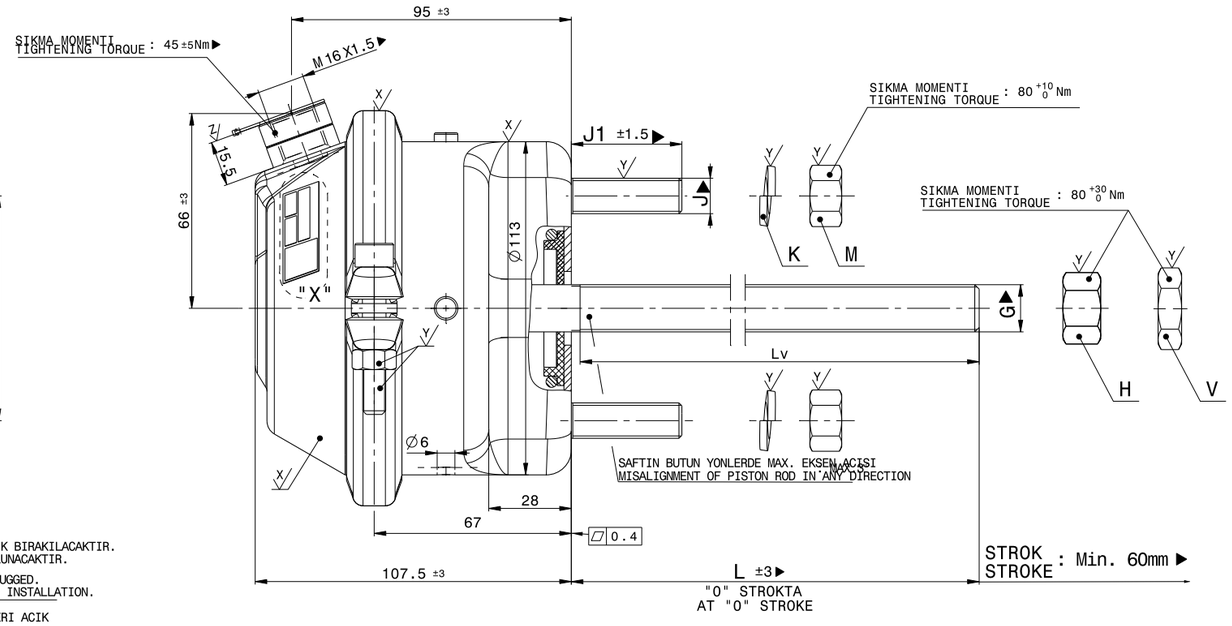

★ BU HAVALANDIRMA DELIGI ACIK BIRAKILACAKTIR.
MONTAJDA ASAGI KONUMDA BULUNACAKTIR.

THIS BREATHER HOLE IS UNPLUGGED.
MUST POINT DOWNWARDS AFTER INSTALLATION.

★★ BUTUN HAVALANDIRMA DELIKLERI ACIK BIRAKILACAKTIR.

ALL BREATHER HOLES ARE UNPLUGGED.

"X" DETAYI
DETAIL "X"

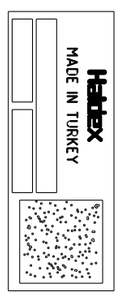

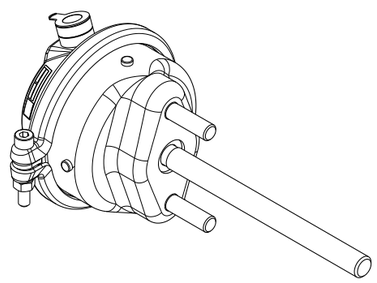

120 909 301	123 090 001	123 090 004

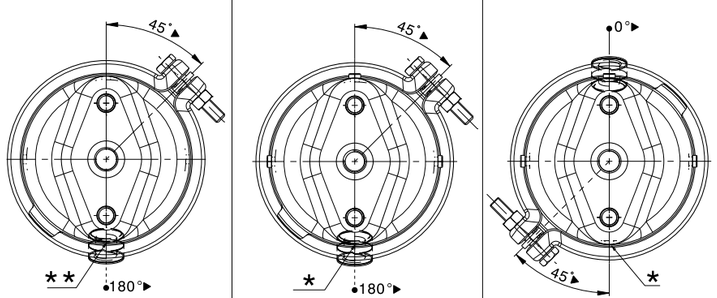

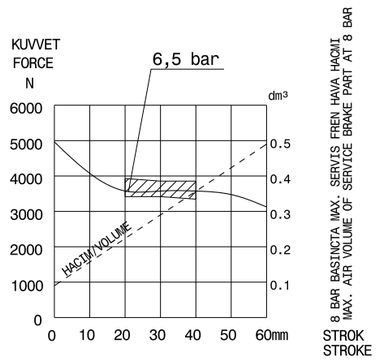

DIN 74060-10'A GORE TIP 9 SERVIS FRENI DIYAGRAMI
TYPE 9 DIAGRAM OF SERVICE BRAKE ACCORDING TO DIN 74060-10 ▶

06.20.T103 TALIMATINA GORE
ACCORDING TO INSTRUCTION 06.20.T103

SYMBOL	CORROSION RESISTANCE ★★★
X	ARF08 - 5.0
Y	ARF08 - 1.1
Z	ARF08 - 2.3

★★ ACCORDING TO DIN EN ISO 9227 NSS SALT SPRAY TEST

123 090 004	-	-	-	M16X1.5	EVET/YESX2	HAYIR/NO	M12X1.5	37.5	EVET/YES	EVET/YES	90	-	80	250 ±25N
123 090 001	-	-	-	M16X1.5	EVET/YES	HAYIR/NO	M12X1.5	37.5	EVET/YES	EVET/YES	185	-	182	
120 909 301	-	-	-	M16X1.5	HAYIR/NO	HAYIR/NO	M12X1.5	37.5	HAYIR/NO	HAYIR/NO	5	-	25	
P/N	CEKTIRME TIPI YOKE TYPE	ØZ	PIM TIPI PIM TYPE	G	H	V	J	J1	K	M	L	L1	Lv	GG YAY KUVVETI RETURN SPRING FORCE

DURABILITY TEST : ⋈ (ACCORDING TO INSTRUCTION 06.20-T06) SYMBOL:DIN ISO 12197	
07.01-T03'E GORE / ACCORDING TO 07.01-T03	
CLASS CF1D ⋈ KRITIK CRITICAL ▶ ONEMLI IMPORTANT	
FORCE OF RETURN SPRING AT 0 STROKE	SEE TABLE

MEDIA	AIR
OPERATING TEMPERATURE RANGE	-40°C + 80°C
MAXIMUM OPERATING PRESSURE	Max. 10 bar
MAXIMUM PRESSURE (TEMPORARY)	13 bar
PERMISSIBLE LEAKAGE ⋈	10 cm^3 / min.

NOTE : PERFORMANCE MEASUREMENTS SHOULD BE DONE AFTER CAGING THE SPRING CHAMBER FOR 24 HOURS MINIMUM.

TOLERANCES UNLESS OTHERWISE SPECIFIED Unless Otherwise Specified	DOC TYPE T9	SCALE 1/1	MATERIAL SEE DETAILS		
THIS DOCUMENT USES SPECIAL CHARACTERISTICS AS DEFINED IN PROCEDURE HEXD-3-364	DRAWN A.CENGIZ	DATE 02.09.22	WEIGHT (ONLY FOR INFO.) ~2 Kg	DIMENSION IN MM	
Haldex HALDEX BRAKE PRODUCTS AB LANDSKRONA SWEDEN	CHECKED CY.AZAP	DATE 02.09.22	TITLE SERVICE BRAKE CHAMBER		
	APPROVED O.BUZ	DATE 02.09.22	ITEM NUMBER 120 909 301	PROJECTION	SHEET	FORMAT A1

GENERIC MODEL (INFO ONLY):