THIS DOCUMENT IS THE PROPERTY OF THE HALDEX GROUP, AND CONTAINS CONFIDENTIAL AND PROPRIETARY INFORMATION
THAT CANNOT BE REPRODUCED, UTILIZED OR DIVULGED, IN WHOLE OR IN PART, WITHOUT WRITTEN AUTHORIZATION

REV	CHANGE DESCRIPTION AND ORDER NUMBER	DATE	CHANGED	CHECKED	APPROVED
E	ADDED HALDEX FRAME.	02.28.22	A.CENGIZ	CY.AZAP	O.BUZ

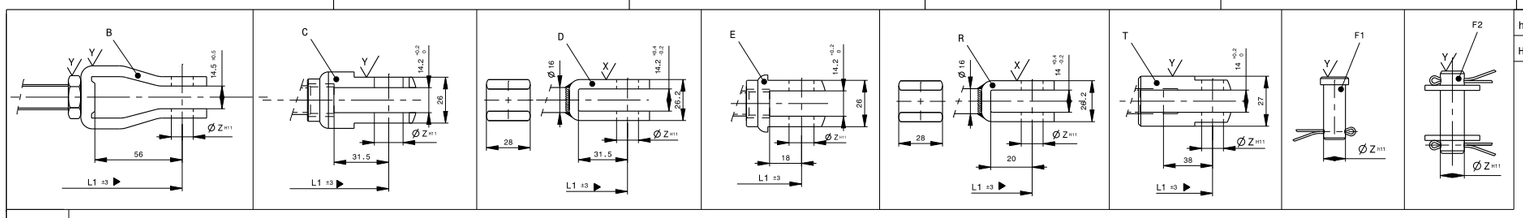

2 ⋈ ANA RESIMDE ORTAK OLCULER VERILMISTIR, OZEL OLCULER ICIN GOSTERIMLERE VE TABLOYA BAKINIZ.
15 ▶ MAIN VIEWS SHOW COMMON DIMENSIONS ONLY,SEE REPRESENTATIONS AND TABLE FOR SPECIFIC DIMENSIONS.

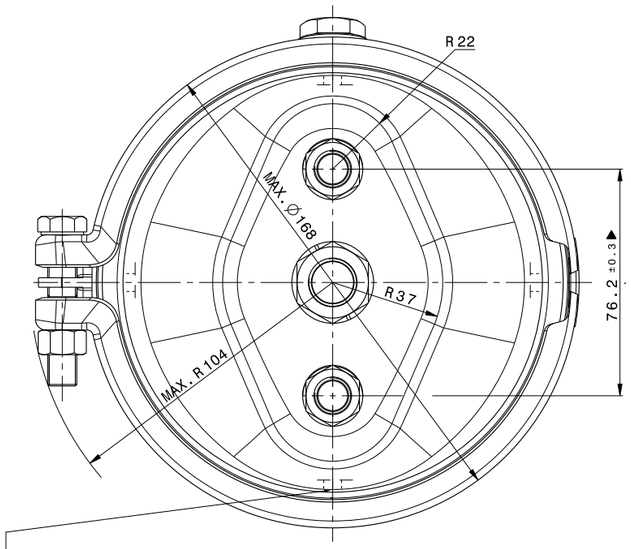

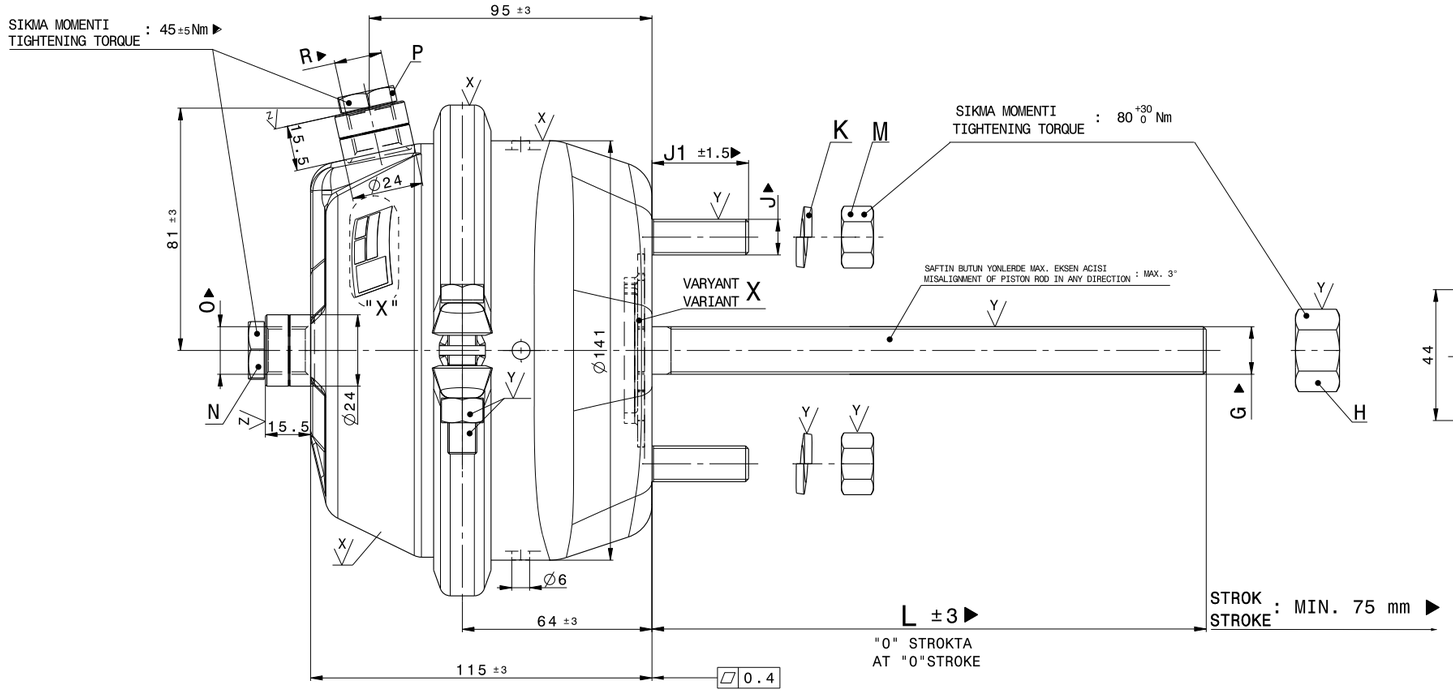

* BUTUN HAVALANDIRMA DELIKLERI ACIK BIRAKILACAKTIR.
ALL BREATHER HOLES ARE UNPLUGGED.

** BU HAVALANDIRMA DELIGI ACIK BIRAKILACAKTIR. MONTAJDA ASAGI KONUMDA BULUNACAKTIR.
THIS BREATHER HOLE IS UNPLUGGED. MUST POINT DOWNWARDS AFTER INSTALLATION

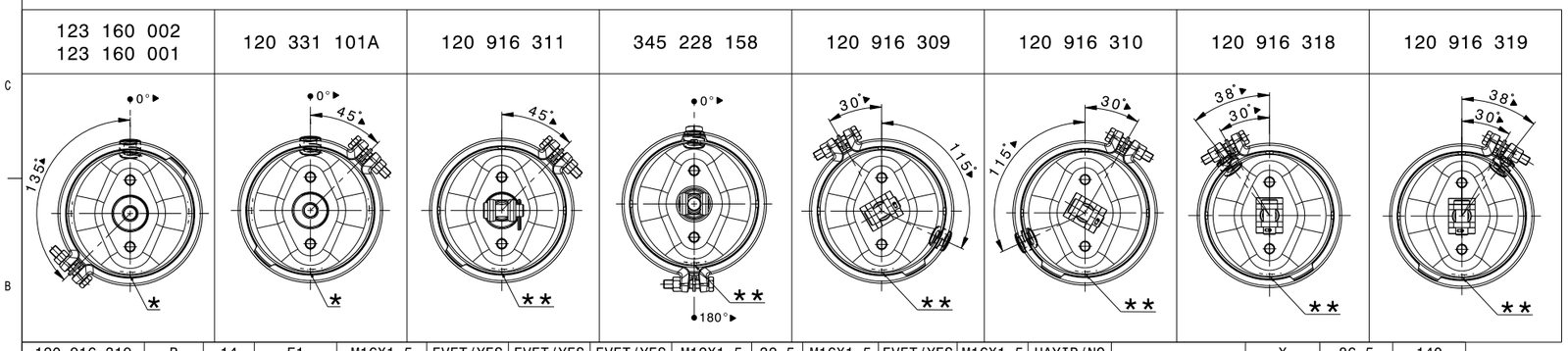

P/N	ÇEKTIRME TIPI YOKE TYPE	ØZ	PIM TIPI PIN TYPE	G	H	K	M	J	J1	O	N	R	P	G.G YAY KUVVETI RETURN SPRING FORCE	VARYANT VARIANT	L	L1
120 916 319	B	14	F1	M16X1.5	EVET/YES	EVET/YES	EVET/YES	M12X1.5	32.5	M16X1.5	EVET/YES	M16X1.5	HAYIR/NO	100 ±15 N	X	86.5	140
120 916 318	B	14	F1	M16X1.5	EVET/YES	EVET/YES	EVET/YES	M12X1.5	32.5	M16X1.5	EVET/YES	M16X1.5	HAYIR/NO	100 ±15 N	X	86.5	140
120 916 310	B	14	F1	M16X1.5	EVET/YES	EVET/YES	EVET/YES	M12X1.5	32.5	M16X1.5	EVET/YES	M16X1.5	HAYIR/NO	100 ±15 N	X	86.5	140
120 916 309	B	14	F1	M16X1.5	EVET/YES	EVET/YES	EVET/YES	M12X1.5	32.5	M16X1.5	EVET/YES	M16X1.5	HAYIR/NO	100 ±15 N	X	86.5	140
345 228 158	T	14	-	M16X1.5	EVET/YES	HAYIR/NO	HAYIR/NO	M12X1.5	32.5	M16X1.5	HAYIR/NO	M16X1.5	EVET/YES	220 +30 -20 N	Y	105	138
120 916 311	T	14	F1	M16X1.5	EVET/YES	EVET/YES	EVET/YES	M12X1.5	32.5	M16X1.5	HAYIR/NO	-	-	100 ±15 N	Y	158	191
120 331 101A	-	-	-	M16X1.5	EVET/YES	EVET/YES	EVET/YES	M12X1.5	32.5	M16X1.5	EVET/YES	M16X1.5	HAYIR/NO	175 ±25 N	Y	190	-
123 160 001	-	-	-	M16X1.5	EVET/YES	EVET/YES	EVET/YES	M12X1.5	32.5	M16X1.5	EVET/YES	M16X1.5	HAYIR/NO	220 +30 -20 N	X	186	-
123 160 002	-	-	-	M16X1.5	EVET/YES	EVET/YES	EVET/YES	M12X1.5	32.5	M16X1.5	EVET/YES	M16X1.5	HAYIR/NO	220 +30 -20 N	Y	186	-

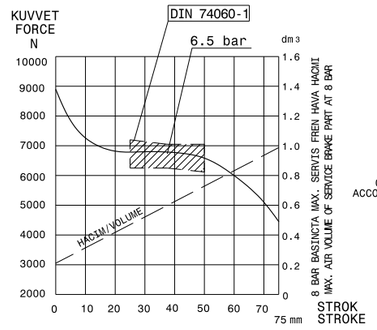

DIN 74060-10'A GORE TIP 16 SERVIS FRENI DIYAGRAMI ▶
TYPE 16 DIAGRAM OF SERVICE BRAKE ACCORDING TO DIN 74060-10

"X" DETAYI
DETAIL "X"

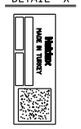

06.20.T103 TALIMATINA GORE
ACCORDING TO INSTRUCTION 06.20.T103

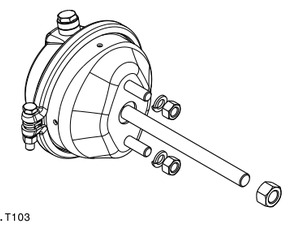

SYMBOL	CORROSION RESISTANCE ***
X	ARF08 - 5.0
Y	ARF08 - 1.1
Z	ARF08 - 2.3

** ACCORDING TO DIN EN ISO 9227 NSS SALT SPRAY TEST

DURABILITY TEST : ⋈ (ACCORDING TO INSTRUCTION 06.20-T06)	MEDIA	AIR	NOTE : PERFORMANCE MEASUREMENTS SHOULD BE DONE AFTER CAGING THE SPRING CHAMBER FOR 24 HOURS MINIMUM.
SYMBOL:DIN ISO 1219	OPERATING TEMPERATURE RANGE	-40°C + 80°C	
07.01-T03'E GORE / ACCORDING TO 07.01-T03	MAXIMUM OPERATING PRESSURE	Max. 10 bar	
CLASS CF1D ⋈ KRITIK CRITICAL ▶ ONEMLI IMPORTANT	MAXIMUM PRESSURE (TEMPORARY)	13 bar	
FORCE OF RETURN SPRING AT 0 STROKE	SEE TABLE	PERMISSIBLE LEAKAGE ⋈	10 cm³/ min.

TOLERANCES UNLESS OTHERWISE SPECIFIED: Unless Otherwise Specified	DOC TYPE T16	SCALE 1/1	MATERIAL SEE DETAILS		
THIS DOCUMENT USES SPECIAL CHARACTERISTICS AS DEFINED IN PROCEDURE HD02-3-004	DRAWN A.CENGIZ	DATE 02.10.22	WEIGHT (ONLY FOR INFO.) ~2.7 Kg	DIMENSION IN MM	
Haldex HALDEX BRAKE PRODUCTS AB LANDSKRONA SWEDEN	CHECKED CY.AZAP	DATE 02.10.22	TITLE SERVICE BRAKE CHAMBER		
	APPROVED O.BUZ	DATE 02.10.22	ITEM NUMBER 123 160 002	PROJECTION	SHEET / FORMAT A1
	GENERIC MODEL (INFO ONLY):				