THIS DOCUMENT IS THE PROPERTY OF THE HALDEX GROUP, AND CONTAINS CONFIDENTIAL AND PROPRIETARY INFORMATION THAT CANNOT BE REPRODUCED, UTILIZED OR DIVULGED, IN WHOLE OR IN PART, WITHOUT WRITTEN AUTHORIZATION

REV	CHANGE DESCRIPTION AND ORDER NUMBER	DATE	CHANGED	CHECKED	APPROVED
E	ADDED HALDEX FRAME.	02.28.22	A.CENGIZ	CY.AZAP	O.BUZ

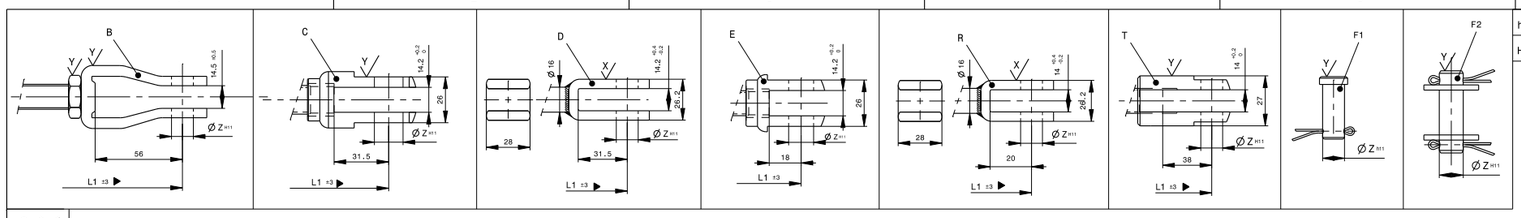

2 ⋈ ANA RESIMDE ORTAK OLCULER VERILMISTIR, OZEL OLCULER ICIN GOSTERIMLERE VE TABLOYA BAKINIZ.
15 ▶ MAIN VIEWS SHOW COMMON DIMENSIONS ONLY,SEE REPRESENTATIONS AND TABLE FOR SPECIFIC DIMENSIONS.

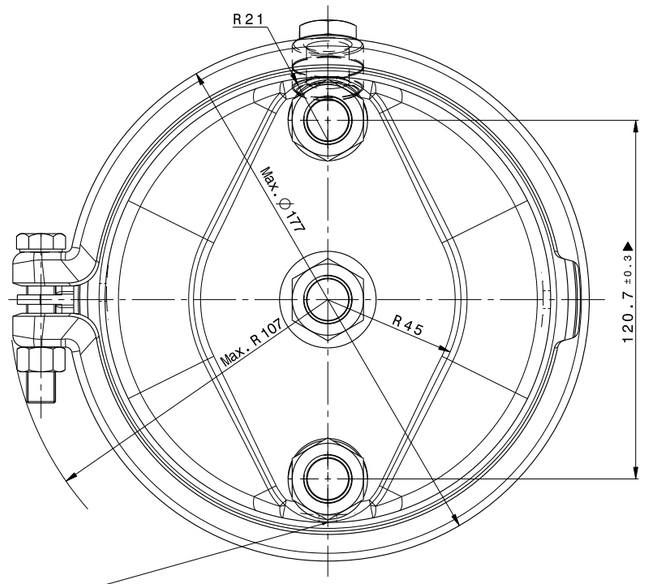

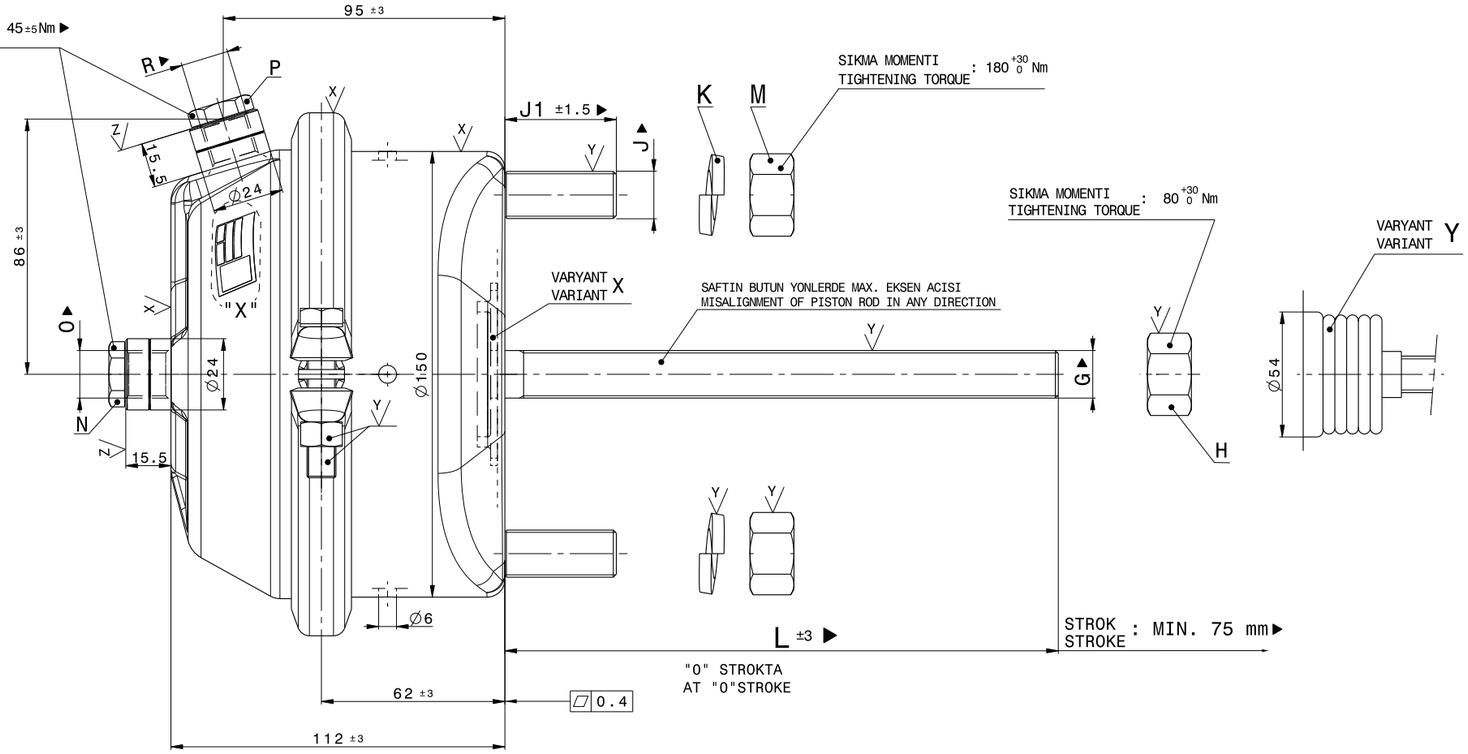

* BUTUN HAVALANDIRMA DELIKLERI ACIK BIRAKILACAKTIR.
ALL BREATHER HOLES ARE UNPLUGGED.

** BU HAVALANDIRMA DELIGI ACIK BIRAKILACAKTIR. MONTAJDA ASAGI KONUMDA BULUNACAKTIR.
THIS BREATHER HOLE IS UNPLUGGED. MUST POINT DOWNWARDS AFTER INSTALLATION

"X" DETAYI
DETAIL "X"

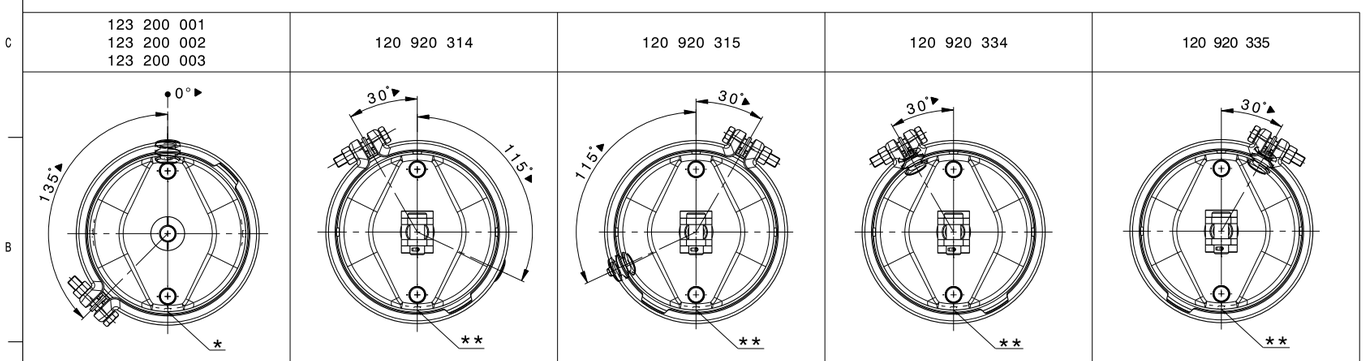

P/N	ÇEKTIRME TIPI YOKE TYPE	ØZ	PIM TIPI PIN TYPE	G	H	K	M	J	J1	O	N	R	P	VARYANT VARIANT	L	L1	GG YAY KUVVETI RETURN SPRING FORCE
120 920 335	B	14	F1	M16X1.5	EVET/YES	EVET/YES	EVET/YES	M16X1.5	37.5	M16X1.5	EVET/YES	M16X1.5	HAYIR/NO	X	90	146	220^{+30}_{-20} N
120 920 334	B	14	F1	M16X1.5	EVET/YES	EVET/YES	EVET/YES	M16X1.5	37.5	M16X1.5	EVET/YES	M16X1.5	HAYIR/NO	X	90	146	
120 920 315	B	14	F1	M16X1.5	EVET/YES	EVET/YES	EVET/YES	M16X1.5	37.5	M16X1.5	EVET/YES	M16X1.5	HAYIR/NO	X	90	146	
120 920 314	B	14	F1	M16X1.5	EVET/YES	EVET/YES	EVET/YES	M16X1.5	37.5	M16X1.5	EVET/YES	M16X1.5	HAYIR/NO	X	90	146	
123 200 003	-	-	-	M16X1.5	EVET/YES	EVET/YES	EVET/YES	M16X1.5	37.5	M16X1.5	EVET/YES	M16X1.5	HAYIR/NO	X	210	-	
123 200 002	-	-	-	M16X1.5	EVET/YES	EVET/YES	EVET/YES	M16X1.5	37.5	M16X1.5	EVET/YES	M16X1.5	HAYIR/NO	Y	186	-	
123 200 001	-	-	-	M16X1.5	EVET/YES	EVET/YES	EVET/YES	M16X1.5	37.5	M16X1.5	EVET/YES	M16X1.5	HAYIR/NO	X	186	-	

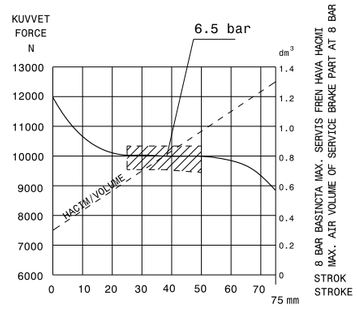

DIN 74060-10'A GORE TIP 20 SERVIS FRENI DIYAGRAMI ▶
TYPE 20 DIAGRAM OF SERVICE BRAKE ACCORDING TO DIN 74060-10

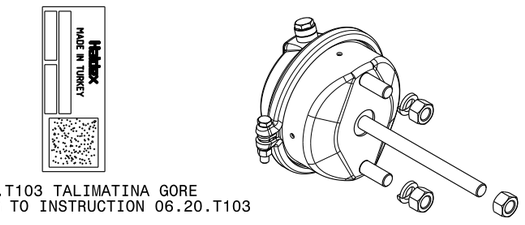

06.20.T103 TALIMATINA GORE
ACCORDING TO INSTRUCTION 06.20.T103

SYMBOL	CORROSION RESISTANCE ***
X	ARF08 - 5.0
Y	ARF08 - 1.1
Z	ARF08 - 2.3

** ACCORDING TO DIN EN ISO 9227 NSS SALT SPRAY TEST

DURABILITY TEST : ⋈ (ACCORDING TO INSTRUCTION 06.20-T06)	
SYMBOL:DIN ISO 1219	
07.01-T03'E GORE / ACCORDING TO 07.01-T03	
CLASS CF1D ⋈ KRITIK CRITICAL ▶ ONEMLI IMPORTANT	
FORCE OF RETURN SPRING AT 0 STROKE	SEE TABLE

MEDIA	AIR
OPERATING TEMPERATURE RANGE	-40°C + 80°C
MAXIMUM OPERATING PRESSURE	Max. 10 bar
MAXIMUM PRESSURE (TEMPORARY)	13 bar
PERMISSIBLE LEAKAGE ⋈	10 cm^3/ min.

NOTE : PERFORMANCE MEASUREMENTS SHOULD BE DONE AFTER CAGING THE SPRING CHAMBER FOR 24 HOURS MINIMUM.

TOLERANCES UNLESS OTHERWISE SPECIFIED: Unless Otherwise Specified	DOC TYPE: T20	SCALE: 1/1	MATERIAL: SEE DETAILS		
THIS DOCUMENT USES SPECIAL CHARACTERISTICS AS DEFINED IN PROCEDURE NO92-3-364	DRAWN: A.CENGIZ	DATE: 02.10.22	WEIGHT [ONLY FOR INFO.]: ~3.2 Kg	DIMENSION IN: MM	
Haldex	CHECKED: CY.AZAP	DATE: 02.10.22	TITLE: SERVICE BRAKE CHAMBER		
HALDEX BRAKE PRODUCTS AB LANDSKRONA SWEDEN	APPROVED: O.BUZ	DATE: 02.10.22	ITEM NUMBER: 123 200 001	PROJECTION	SHEET / FORMAT: A1
			GENERIC MODEL [INFO ONLY]:		