THIS DOCUMENT IS THE PROPERTY OF THE HALDEX GROUP, AND CONTAINS CONFIDENTIAL AND PROPRIETARY INFORMATION
THAT CANNOT BE REPRODUCED, UTILIZED OR DIVULGED, IN WHOLE OR IN PART, WITHOUT WRITTEN AUTHORIZATION

REV	CHANGE DESCRIPTION AND ORDER NUMBER	DATE	CHANGED	CHECKED	APPROVED
C	ADDED HALDEX FRAME.	02.28.22	A.CENGIZ	CY.AZAP	O.BUZ

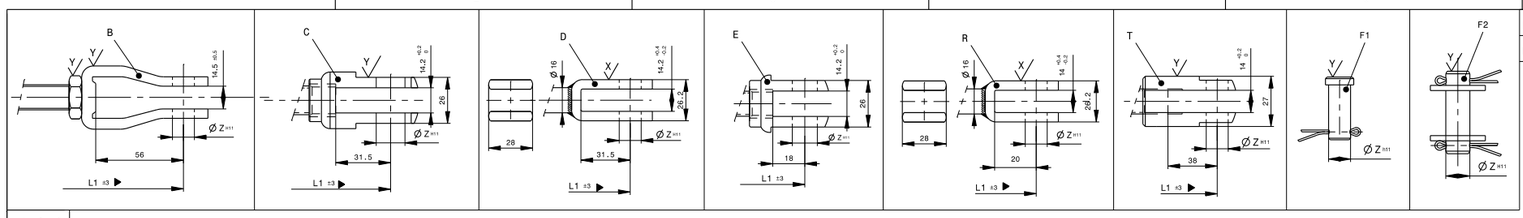

2 ⋈ 15 ▶ ANA RESIMDE ORTAK OLCULER VERILMISTIR, OZEL OLCULER ICIN GOSTERIMLERE VE TABLOYA BAKINIZ.
MAIN VIEWS SHOW COMMON DIMENSIONS ONLY,SEE REPRESENTATIONS AND TABLE FOR SPECIFIC DIMENSIONS.

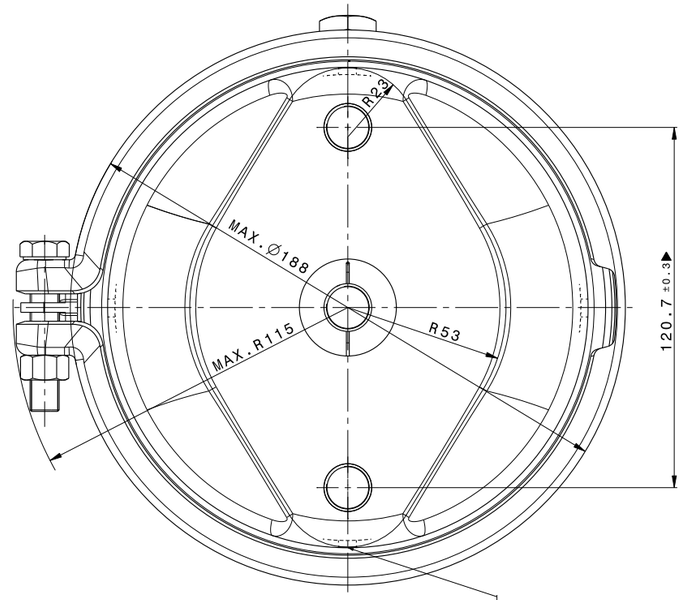

* BUTUN HAVALANDIRMA DELIKLERI ACIK BIRAKILACAKTIR.
ALL BREATHER HOLES ARE UNPLUGGED.

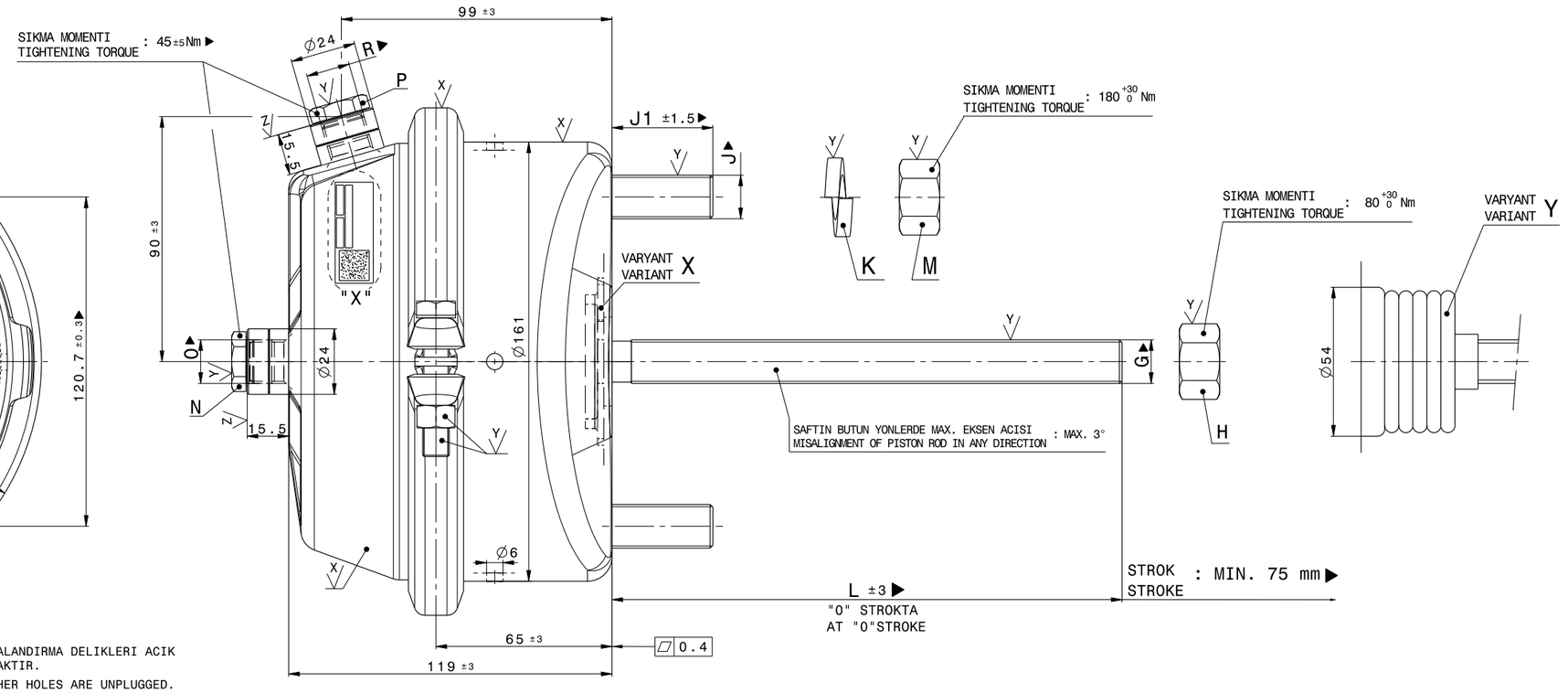

123 240 001
123 240 002
123 240 003
123 240 004

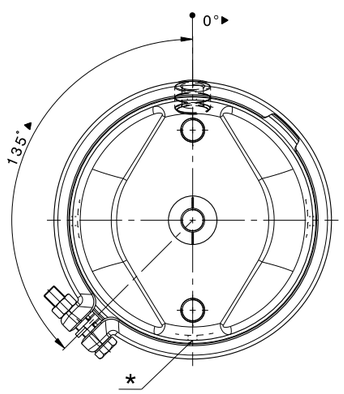

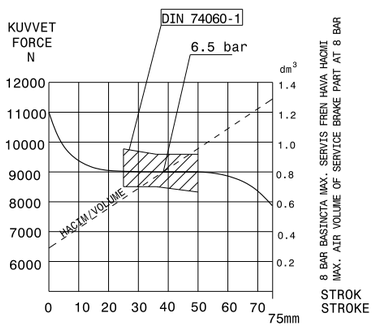

DIN 74060-10'A GORE TIP 24 SERVIS FRENI DIYAGRAMI
TYPE 24 DIAGRAM OF SERVICE BRAKE ACCORDING TO DIN 74060-10 ▶

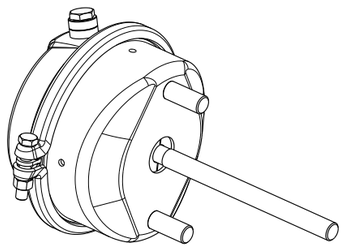

"X" DETAYI
DETAIL "X"

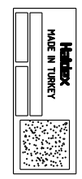

06.20.T103 TALIMATINA GORE
ACCORDING TO INSTRUCTION 06.20.T103

SYMBOL	CORROSION RESISTANCE ***
X	ARF08 - 5.0
Y	ARF08 - 1.1
Z	ARF08 - 2.3

** ACCORDING TO DIN EN ISO 9227 NSS SALT SPRAY TEST

P/N	ÇEKTIRME TIPI YOKE TYPE	ØZ	PIM TIPI PIN TYPE	G	H	K	M	J	J1	O	N	R	P	VARYANT VARIANT	L	L1	GG YAY KUVVETI RETURN SPRING FORCE
123 240 004	-	-	-	M16X1.5	EVET/YES	EVET/YES	EVET/YES	M16X1.5	37	M16X1.5	EVET/YES	M16X1.5	HAYIR/NO	X	146	-	220 +30 -20 N
123 240 003	-	-	-	M16X1.5	EVET/YES	EVET/YES	EVET/YES	M16X1.5	37	M16X1.5	EVET/YES	M16X1.5	HAYIR/NO	X	210	-	
123 240 002	-	-	-	M16X1.5	EVET/YES	EVET/YES	EVET/YES	M16X1.5	37	M16X1.5	EVET/YES	M16X1.5	HAYIR/NO	Y	186	-	
123 240 001	-	-	-	M16X1.5	EVET/YES	EVET/YES	EVET/YES	M16X1.5	37	M16X1.5	EVET/YES	M16X1.5	HAYIR/NO	X	186	-	

DURABILITY TEST : ⋈ (ACCORDING TO INSTRUCTION 06.20-T06)	
SYMBOL:DIN ISO 1219	
07.01-T03'E GORE / ACCORDING TO 07.01-T03	
CLASS CF1D	⋈ KRITIK CRITICAL ▶ ONEMLI IMPORTANT
FORCE OF RETURN SPRING AT 0 STROKE	SEE TABLE

MEDIA	AIR
OPERATING TEMPERATURE RANGE	-40°C + 80°C
MAXIMUM OPERATING PRESSURE	Max. 10 bar
MAXIMUM PRESSURE (TEMPORARY)	13 bar
PERMISSIBLE LEAKAGE ⋈	10 cm³/ min.

NOTE : PERFORMANCE MEASUREMENTS SHOULD BE DONE
AFTER CAGING THE SPRING CHAMBER FOR 24 HOURS MINIMUM.

TOLERANCES UNLESS OTHERWISE SPECIFIED Unless Otherwise Specified	DOC TYPE T24	SCALE 1/1	MATERIAL SEE DETAILS		
THIS DOCUMENT USES SPECIAL CHARACTERISTICS AS DEFINED IN PROCEDURE HDS2-3-364	DRAWN A.CENGIZ	DATE 02.10.22	WEIGHT (ONLY FOR INFO.) ~3.8 Kg	DIMENSION IN MM	
Haldex HALDEX BRAKE PRODUCTS AB LANDSKRONA SWEDEN	CHECKED CY.AZAP	DATE 02.10.22	TITLE SERVICE BRAKE CHAMBER		
	APPROVED O.BUZ	DATE 02.10.22	ITEM NUMBER 123 240 001	PROJECTION	SHEET / FORMAT A1

GENERIC MODEL (INFO ONLY):