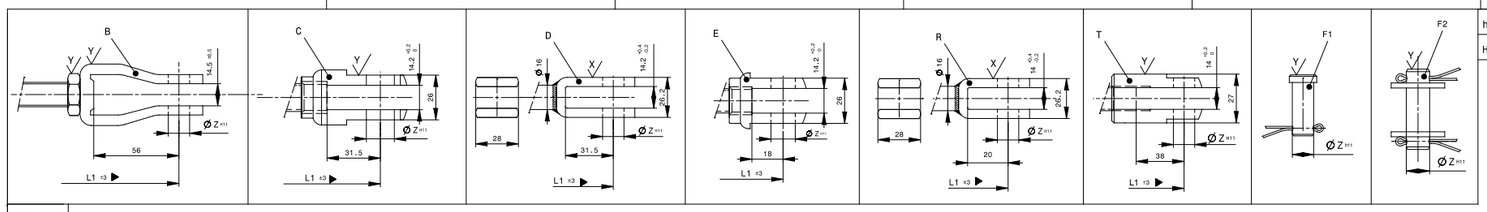

h11	0 / -0.11
H11	+0.11 / 0

THIS DOCUMENT IS THE PROPERTY OF THE HALDEX GROUP, AND CONTAINS CONFIDENTIAL AND PROPRIETARY INFORMATION THAT CANNOT BE REPRODUCED, UTILIZED OR DIVULGED, IN WHOLE OR IN PART, WITHOUT WRITTEN AUTHORIZATION

REV	CHANGE DESCRIPTION AND ORDER NUMBER	DATE	CHANGED	CHECKED	APPROVED
C	ADDED HALDEX FRAME.	02.28.22	A.CENGIZ	CY.AZAP	O.BUZ
D	HALDEX LOGO DETAILS REMOVED.	04.24.24	A.CENGIZ	B.SAHIN	O.BUZ

2 ▶◀
15 ▶
ANA RESIMDE ORTAK OLCULER VERILMISTIR, OZEL OLCULER ICIN GOSTERIMLERE VE TABLOYA BAKINIZ.
MAIN VIEWS SHOW COMMON DIMENSIONS ONLY,SEE REPRESENTATIONS AND TABLE FOR SPECIFIC DIMENSIONS.

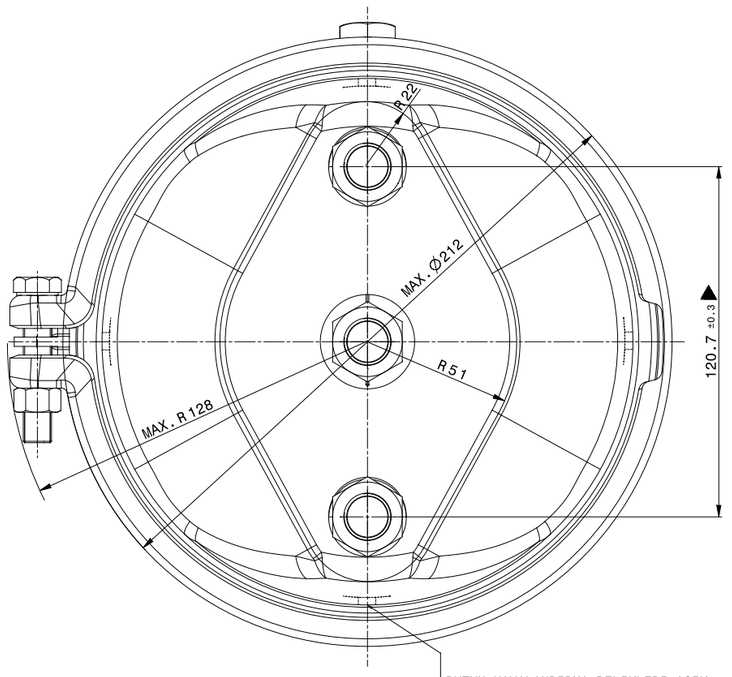

* BUTUN HAVALANDIRMA DELIKLERI ACIK BIRAKILACAKTIR.
ALL BREATHER HOLES ARE UNPLUGGED.

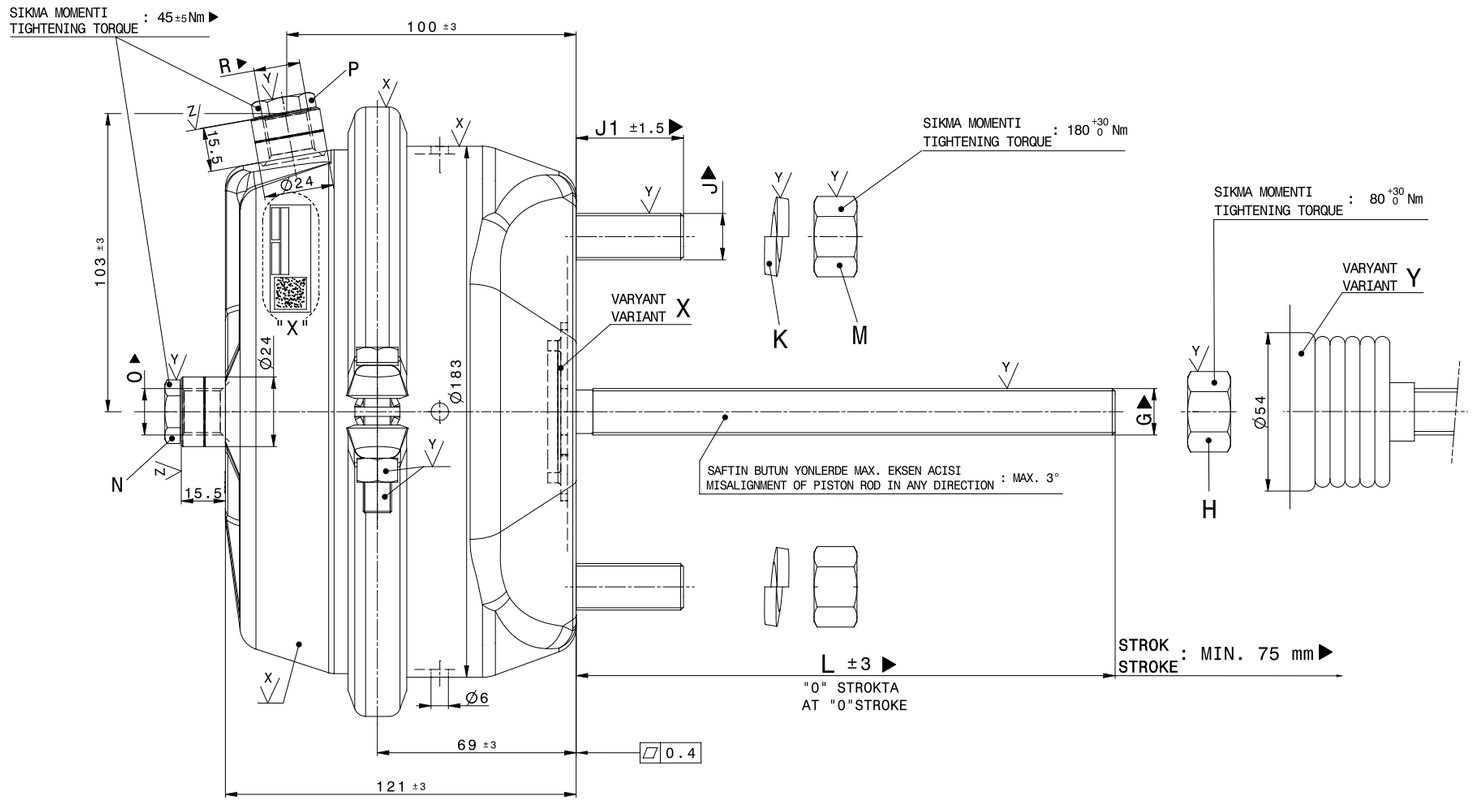

123 300 001
123 300 002
123 300 003

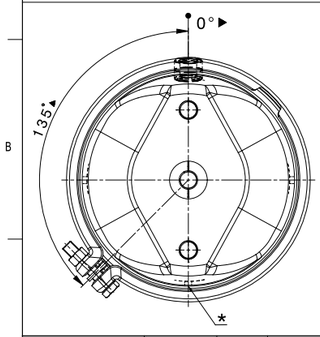

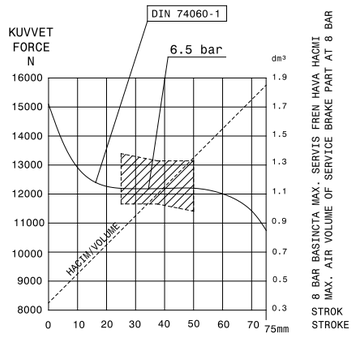

DIN 74060-10'A GORE TIP 30 SERVIS FRENI DIYAGRAMI
TYPE 30 DIAGRAM OF SERVICE BRAKE ACCORDING TO DIN 74060-10 ▶

"X" DETAYI
DETAIL "X"

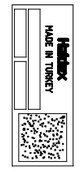

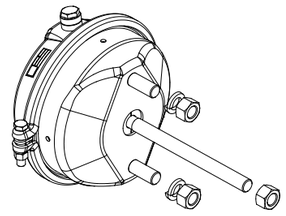

06.20.T103 TALIMATINA GORE
ACCORDING TO INSTRUCTION 06.20.T103

SYMBOL	CORROSION RESISTANCE ***
X	ARF08 - 5.0
Y	ARF08 - 1.1
Z	ARF08 - 2.3

** ACCORDING TO DIN EN ISO 9227 NSS SALT SPRAY TEST

P/N	ÇEKTIRME TIPI YOKE TYPE	ØZ	PIM TIPI PIN TYPE	G	H	K	M	J	J1	O	N	R	P	VARYANT VARIANT	L	L1	GG YAY KUVVETI RETURN SPRING FORCE
123 300 003	-	-	-	M16X1.5	EVET/YES	EVET/YES	EVET/YES	M16X1.5	37	M16X1.5	EVET/YES	M16X1.5	HAYIR/NO	X	210	-	220 +30 -20 N
123 300 002	-	-	-	M16X1.5	EVET/YES	EVET/YES	EVET/YES	M16X1.5	37	M16X1.5	EVET/YES	M16X1.5	HAYIR/NO	Y	186	-	
123 300 001	-	-	-	M16X1.5	EVET/YES	EVET/YES	EVET/YES	M16X1.5	37	M16X1.5	EVET/YES	M16X1.5	HAYIR/NO	X	186	-	

DURABILITY TEST : (ACCORDING TO INSTRUCTION 06.20-T06)	
SYMBOL:DIN ISO 1219	
07.01-T03'E GORE / ACCORDING TO 07.01-T03	
CLASS CF1D	KRITIK CRITICAL / ONEMLI IMPORTANT
FORCE OF RETURN SPRING AT O STROKE	SEE TABLE

MEDIA	AIR
OPERATING TEMPERATURE RANGE	-40°C + 80°C
MAXIMUM OPERATING PRESSURE	Max. 10 bar
MAXIMUM PRESSURE (TEMPORARY)	13 bar
PERMISSIBLE LEAKAGE ▶◀	10 cm^3 / min.

NOTE : PERFORMANCE MEASUREMENTS SHOULD BE DONE AFTER CAGING THE SPRING CHAMBER FOR 24 HOURS MINIMUM.

TOLERANCES UNLESS OTHERWISE SPECIFIED: Unless Otherwise Specified	DOC TYPE: T30	SCALE: 1/1	MATERIAL: SEE DETAILS		
THIS DOCUMENT USES SPECIAL CHARACTERISTICS AS DEFINED IN PROCEDURE HD12-3-364	DRAWN: A.CENGIZ	DATE: 02.10.22	WEIGHT [ONLY FOR INFO.]: ~4.7 Kg	DIMENSION IN: MM	
Haldex	CHECKED: CY.AZAP	DATE: 02.10.22	TITLE: SERVICE BRAKE CHAMBER		
	APPROVED: O.BUZ	DATE: 02.10.22	ITEM NUMBER: 123 300 001	PROJECTION	SHEET / FORMAT: A1

GENERIC MODEL [INFO ONLY]: