© THIS DOCUMENT IS THE PROPERTY OF THE HALDEX GROUP. AND CONTAINS CONFIDENTIAL AND PROPRIETARY INFORMATION THAT CANNOT BE REPRODUCED. UTILIZED OR DIVULGED. IN WHOLE OR IN PART. WITHOUT WRITTEN AUTHORIZATION

REV	CHANGE DESCRIPTION AND ORDER NUMBER	DATE	CHANGED	CHECKED	APPROVED
01	02405	2023-02-15	MN844	JG1031	JG1031

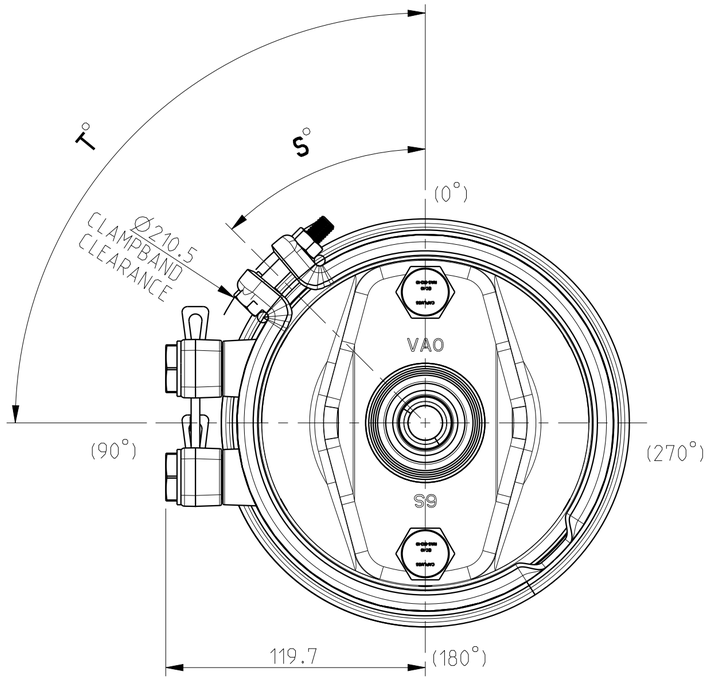

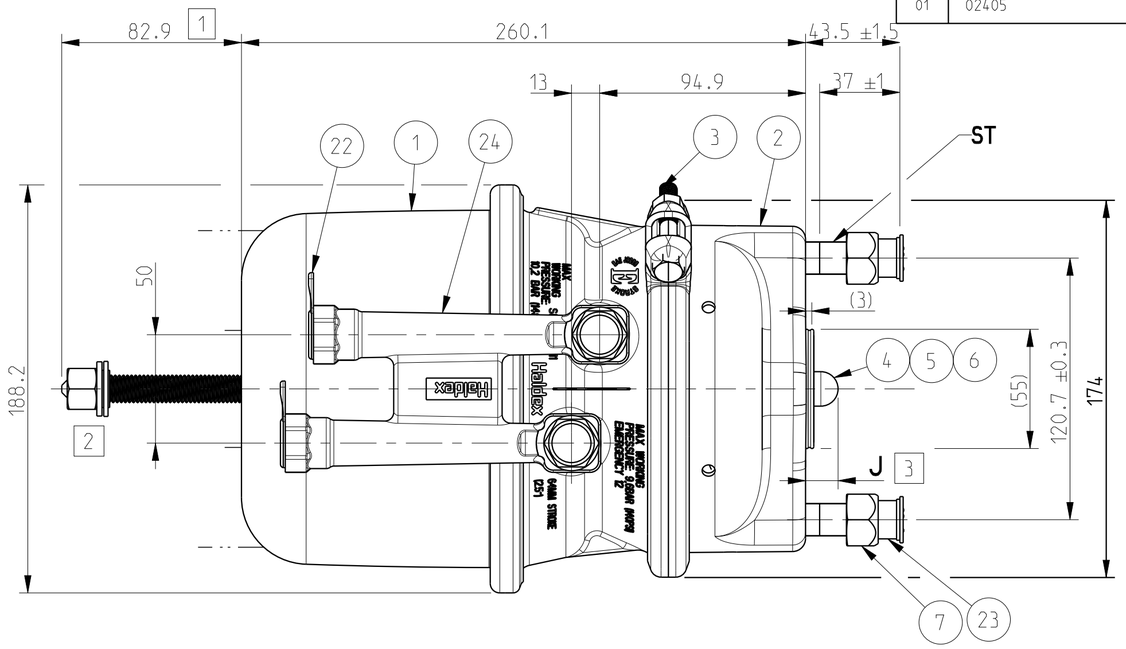

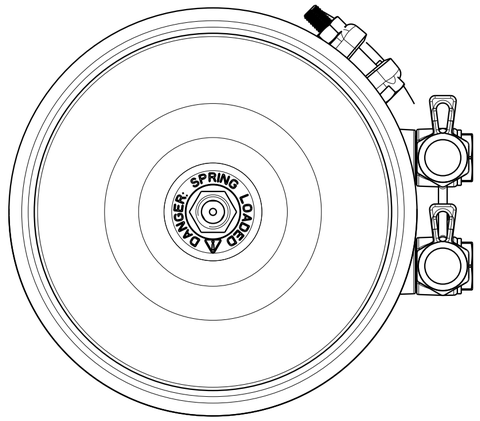

INTENDED FOR DISC BRAKE TRAILER APPLICATIONS WITH MAXIMUM 64MM STROKE

PORT 11 SERVICE CHAMBER: OPERATING PRESSURE: 8.5BAR
TEMPORARILY: 10.2BAR

PORT 12 PARKING CHAMBER: OPERATING PRESSURE: 8.5BAR

RELEASE PRESSURE: 5.1±0.3 BAR AT 10mm STROKE

PISTON RETURN SPRING SERVICE SIDE, MINIMUM RETURN FORCE: 180±30N

ACTUATOR MAY BE INSTALLED ON THE VEHICLE WITH MOUNTING STUDS ORIENTED IN ANY POSITION

UNIT SHOWN IN BRAKE RELEASED POSITION

MISALIGNMENT OF THE PUSHROD IN ANY POSITION: 4°

1 DIMENSIONS APPLIES WHEN UNIT IS SHIPPED CAGED, IN BRAKE RELEASED POSITION (AS SHOWN)

2 TORQUE CAGING TOOL TO 68-81Nm AFTER INSTALLING THE UNIT TO ENSURE SEALING OF THE SPRING HOUSING

3 DIMENSION IS WITH THE UNIT IN BRAKE RELEASED POSITION

SERVICE CHAMBER PERFORMANCE T-20 6,5BAR
ACCORDING TO TÜV BC 0217

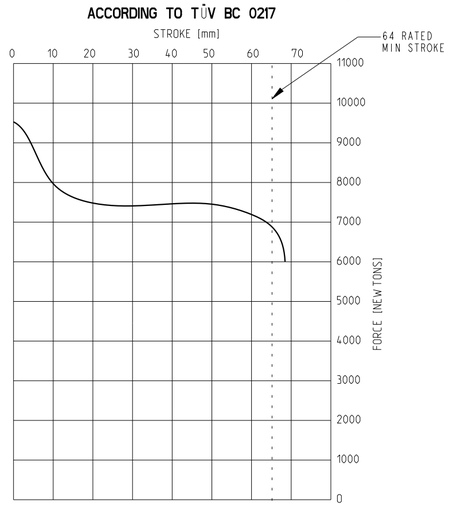

SPRING CHAMBER PERFORMANCE T-24
ACCORDING TO TÜV BC 0217

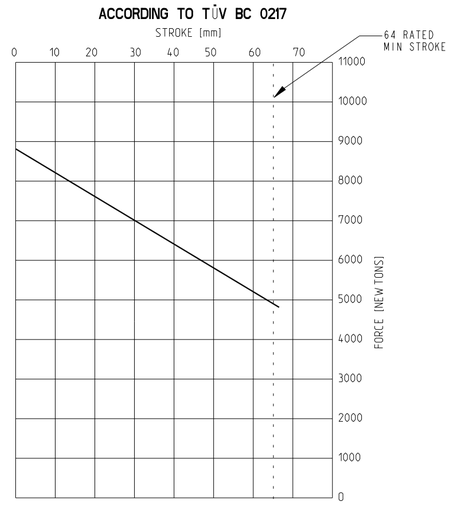

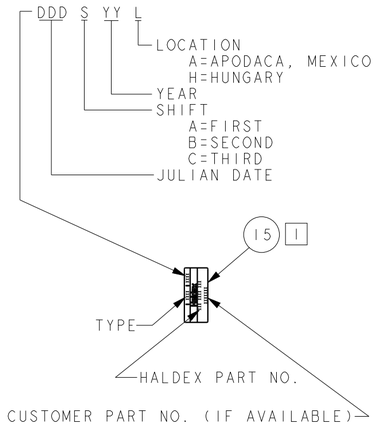

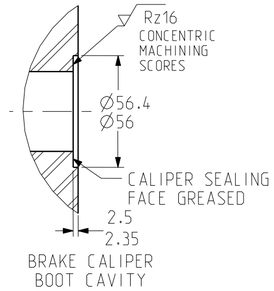

ITEM	DESCRIPTION
24	EXTENSION PIPES
23	PROTECTOR END
22	PROTECTOR PORT
15	LABEL
8	WASHER
7	LOCK NUT M16X1,5
6	WASHER SHIM 0,5
5	WASHER SHIM
4	ROD END SPHERICAL
3	CLAMPBAND ASSY
2	SERVICE HSG ASSY
1	PIGGYBACK

TORQUE TABLE

ITEM	Nm
MOUNTING NUTS	180-210
CLAMPBAND M8	16-20
PORT FITTINGS	35-40
RELEASE TOOL (UN-CAGED)	68-81

1762024620	YES	NO	YES	45°	YES	NO	15	90°	
PART NUMBER	ITEM 7 NUT	ITEM 8 WASHER	ITEM 3 CLAMPBAND	S° ±5 CLAMPBAND	ITEM 22 THREAD PROTECTOR	ITEM 23 STUD PROTECTOR	J ±0.5 DIM	T ±5° PORT	REL

TOLERANCES UNLESS OTHERWISE SPECIFIED ISO 2768-v	DOC TYPE ASSEM	SCALE 1:2	MATERIAL		
THIS DOCUMENT USES SPECIAL CHARACTERISTICS AS DEFINED IN PROCEDURE HDX2-3-364	DRAWN MN844	DATE 2022-02-03	WEIGHT (ONLY FOR INFO.) 8.037 kg	DIMENSION IN mm	DO NOT SCALE DRAWING
Haldex HALDEX AB LANDSKRONA SWEDEN	CHECKED MN844	DATE 2022-04-22	TITLE LIFESEAL DISC T-2024 EXT.PIPE		
	APPROVED JG1031	DATE 2022-04-25	ITEM NUMBER 1762024620	PROJECTION	SHEET 1(1) / FORMAT A2

GENERIC MODEL (INFO ONLY): 1762024620GENERIC