© THIS DOCUMENT IS THE PROPERTY OF THE HALDEX GROUP. AND CONTAINS CONFIDENTIAL AND PROPRIETARY INFORMATION THAT CANNOT BE REPRODUCED. UTILIZED OR DIVULGED. IN WHOLE OR IN PART. WITHOUT WRITTEN AUTHORIZATION

REV	CHANGE DESCRIPTION AND ORDER NUMBER	DATE	CHANGED	CHECKED	APPROVED
1	00127 - PRODUCTION RELEASE	2021-05-04	GP198	MC028	WS144

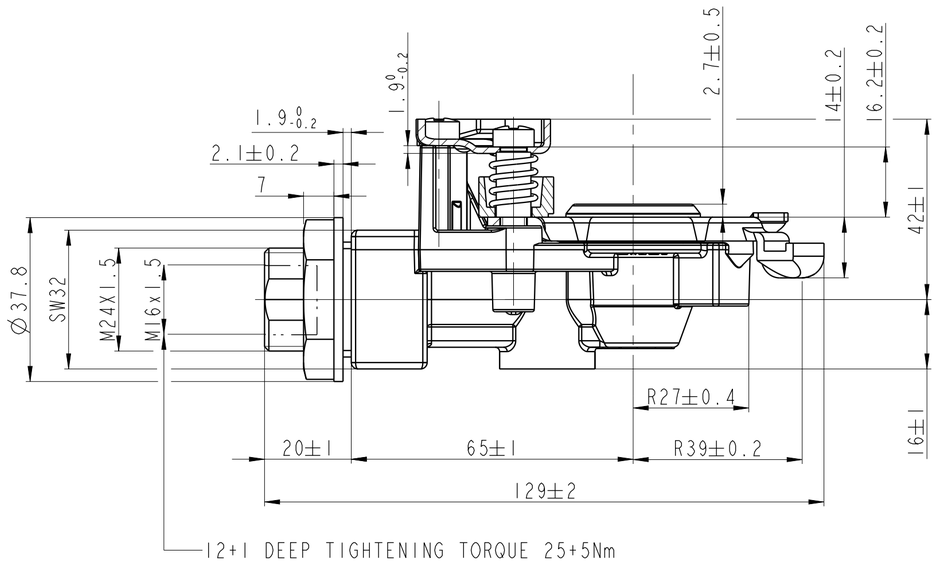

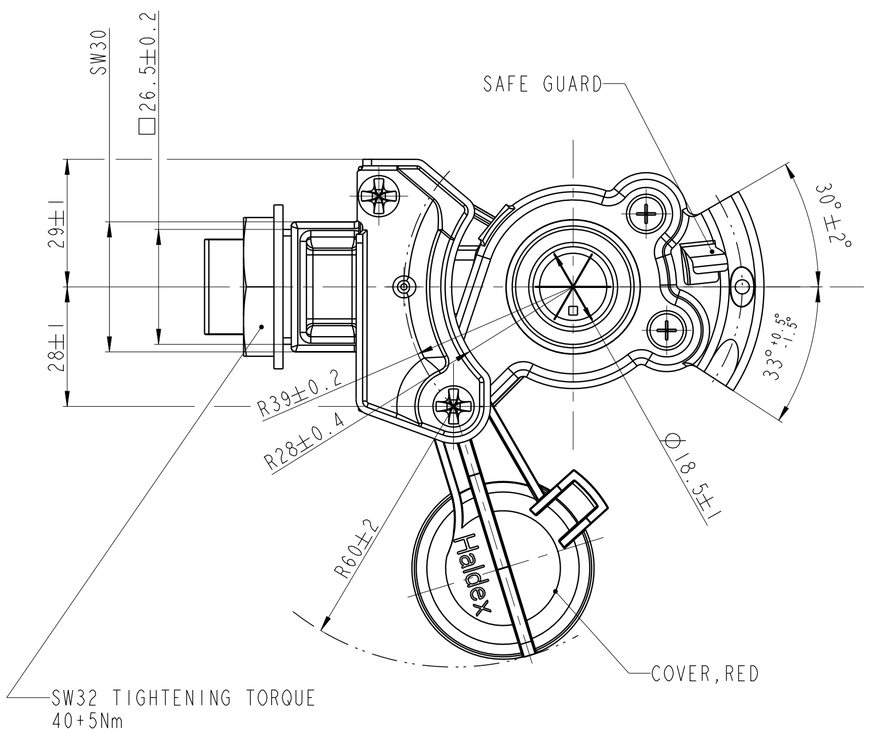

THESE COUPLINGS ARE COMPATIBLE WITH COUPLINGS DIN ISO 1728 AND SAE J318.

MEDIUM: AIR

OPERATING PRESSURE MAX: 10.0 BAR

THERMAL RANGE OF APPLICATION: - 40 °C ... + 80 °C

FILTER MESH: 150 µm

SYMBOL	
DIN 74253	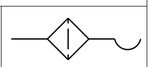
ISO 1219	

PART-NO. 334 086 201

TOLERANCE UNLESS OTHERWISE SPECIFIED N/A	DOC TYPE ASSEM	SCALE 1:1	MATERIAL N/A		
THIS DOCUMENT USES SPECIAL CHARACTERISTICS AS DEFINED IN PROCEDURE HDX2-3-364	DRAWN B. HAWKES	DATE 2016-02-09	WEIGHT (ONLY FOR INFO.) N/A	DIMENSION IN mm	DO NOT SCALE DRAWING
Haldex	CHECKED MC028	DATE 2020-11-09	TITLE PALM COUPLING, EMERGENCY WITH FILTER		
HALDEX BRAKE PRODUCTS LTD MIRA TECHNOLOGY PARK	APPROVED WS144	DATE 2020-11-09	ITEM NUMBER 334_086_201	PROJECTION	SHEET 1(1) / FORMAT A2

GENERIC MODEL (INFO ONLY): 334_086_201