PART No 815_046_000_2

COMPUTER PRODUCED DRAWING
MUST NOT BE CHANGED MANUALLY

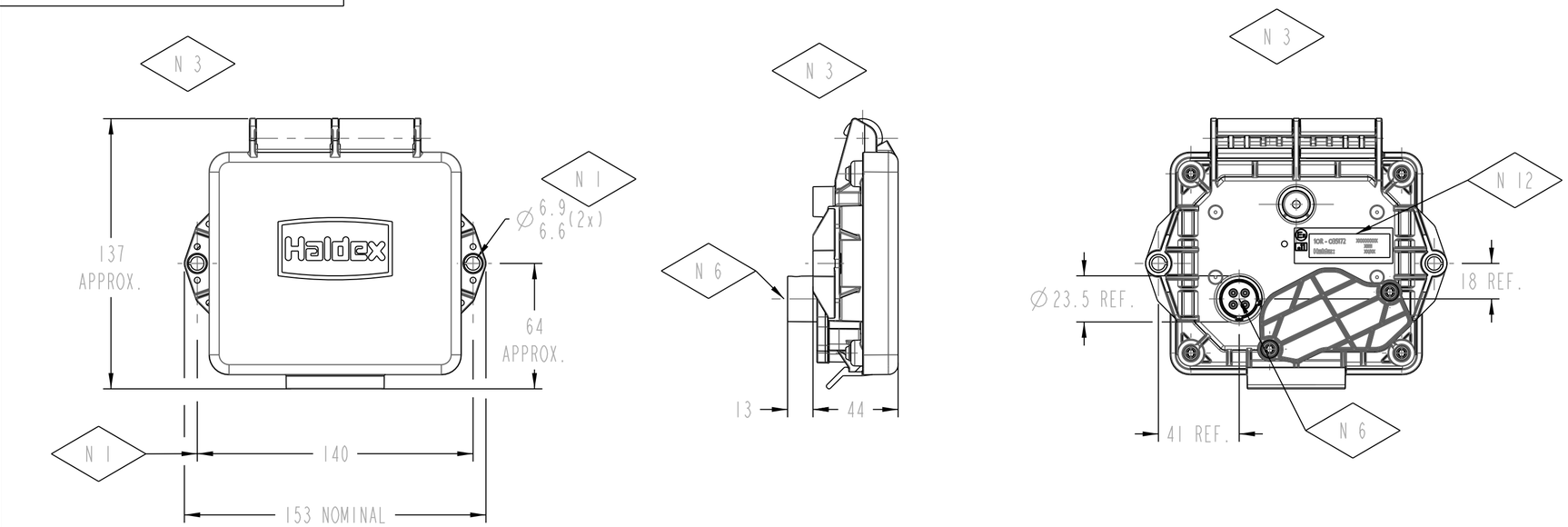

ASSY. No.	EMC APPROVAL No.	SUPPLY
815 046 001	10R-035172	12 & 24 V

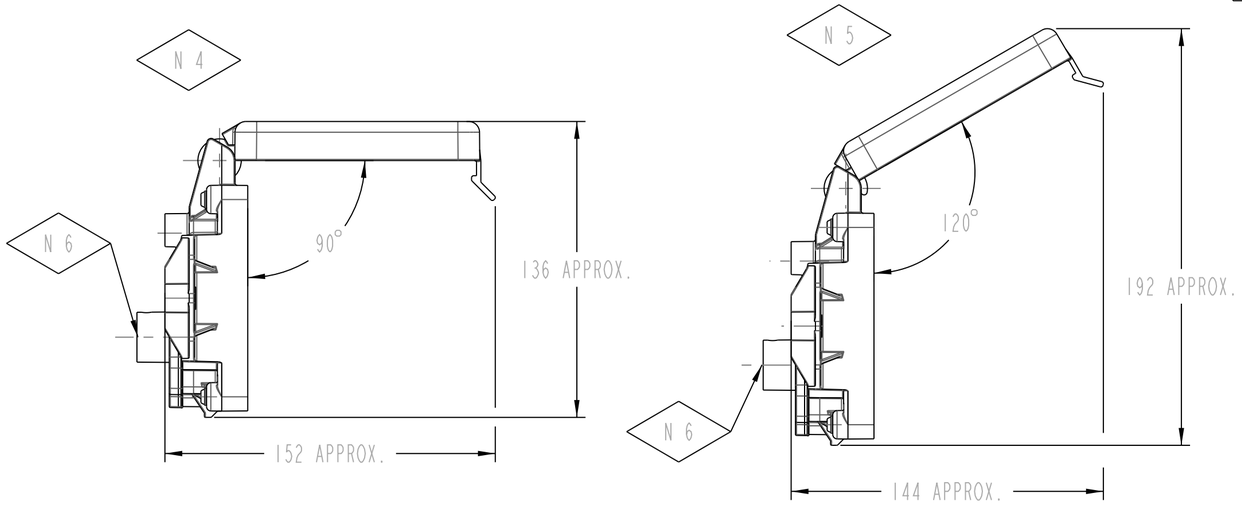

N1	MOUNTING CENTRES. USE ∅6mm BOLTS OR SCREWS FOR ATTACHMENT. TIGHTENING TORQUE 12-13 Nm. USE A PLAIN WASHER BETWEEN BOLT/SCREW AND THE INFO CENTRE MOUNTING BOSS OUTER FACE.
N2	RECOMMENDED MOUNTING WITH THE COVER HINGE AT TOP (SEE SHEET 2).
N3	COVER IN CLOSED POSITION. COVER TO BE CLOSED WHEN INFOCENTRE NOT IN USE.
N4	COVER IN OPENED POSITION (90° - FIRST POSITION).
N5	COVER IN OPENED POSITION (120° - SECOND POSITION).
N6	EB+ AUXILIARY 4 PIN CONNECTOR FOR CABLE 814 019 300 2. CABLE CLICK-FIT TO BE COMPLETELY ENGAGED INTO HOUSING SOCKET.
N7	FLAT AREA REQUIRED FOR SUPPORT FEATURES.
N8	FITTED LENGTH.
N9	ASSEMBLY ACCESS.
N10	RECOMMENDED THICKNESS OF THE MOUNTING PLATE.
N11	RECOMMENDED MOUNTING POSITION WITHIN THESE ANGLES.
N12	HALDEX ASSEMBLY NUMBER, MO NUMBER, DATE CODE AND EMC APPROVAL NUMBER ON THIS LABEL.

THIS DRAWING/SPECIFICATION USES CLASSIFIED CHARACTERISTIC SYMBOLS DEFINED IN QUALITY PROCEDURE 4.17

ISS	CHANGE	CHEC	DATE	ISS	CHANGE	CHEC	DATE
1	PR1969	PL	01-09-09				

PRO ENGINEER PART

THIS DRAWING/DOCUMENT IS COPYRIGHT AND THE PROPERTY OF HALDEX BRAKE PRODUCTS LIMITED. IT MUST NOT BE COPIED (IN WHOLE OR IN PART) USED FOR MANUFACTURE OR OTHERWISE DISCLOSED WITHOUT PRIOR WRITTEN CONSENT OF THE COMPANY. ANY COPIES OF THIS DRAWING/DOCUMENT MADE BY ANY METHOD MUST ALSO INCLUDE A COPY OF THIS LEGEND. © 2009

NOTE: UNLESS OTHERWISE STATED THE FOLLOWING APPLIES
1 ISO METHOD A PROJECTION.
2 S.I. UNITS.
3 SURFACE FINISH TO BS 308/BS 1134.
4 DIMS. APPLY AFTER CHEMICAL OR ELECTRO-PLATED FINISH.
5 WELD SYMBOLS TO BS 499.
6 D DATUM DIMENSIONS.
7 METRIC THREADS TO BS 3643/DIN 13.
8 UNIFIED THREADS TO BS 1580.

ASSOC SPECS.			
MATERIAL	MODEL:	DATE:	
	DRAWN: PL	DATE: 13-07-09	
HEAT TREATMENT	CHECKED IC / C Mc	DATE 02/09/09	
FINISH	APPROVED SPECIALIST JPH	DATE 02/09/09	
FORM ASSEMBLY	APPROVED FOR ISSUE JPH	DATE 02/09/09	

TITLE
HALDEX INFO CENTRE 2 - ADR

SCALE 1:2

WAS

SHEET 1 OF 2

Haldex
HALDEX BRAKE PRODUCTS LTD.
MOONS MOAT DRIVE, REDDITCH, WORCS. B98 9HA

PART No. 815_046_000_2

1

A2

PART No 815_046_000_2

COMPUTER PRODUCED DRAWING
MUST NOT BE CHANGED MANUALLY

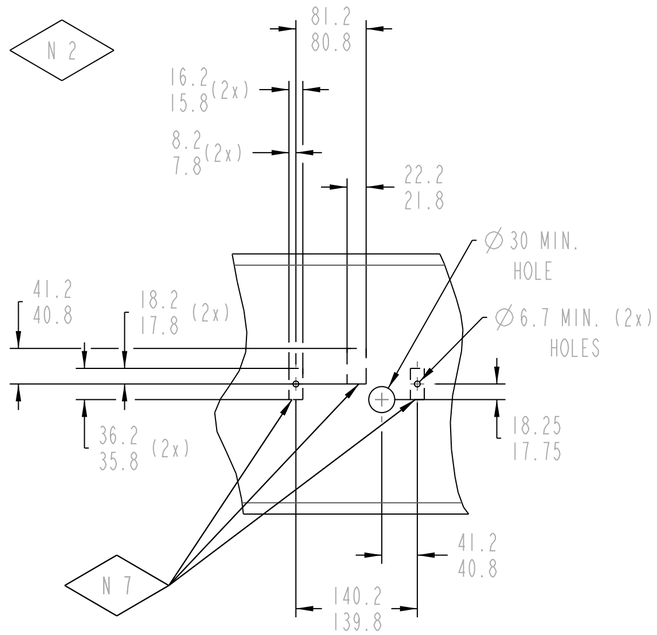

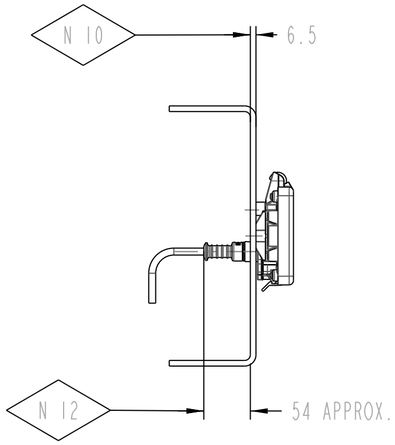

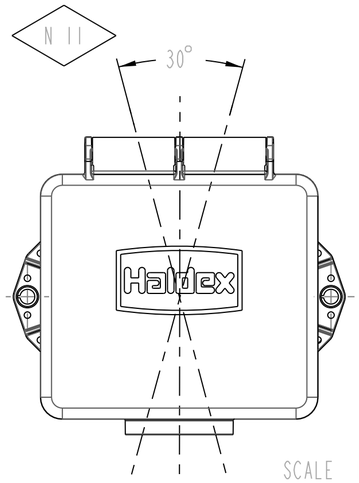

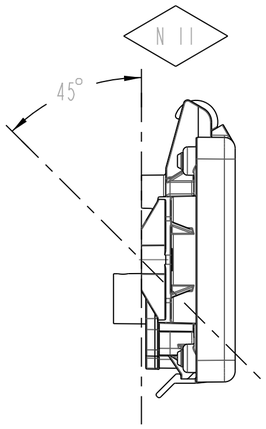

SCALE 1:2

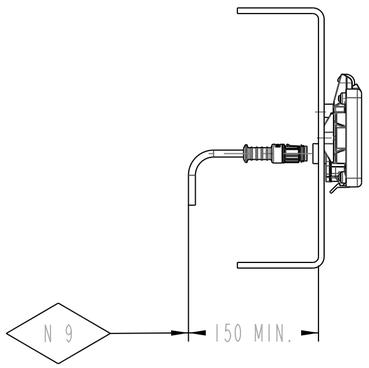

THIS DRAWING/SPECIFICATION USES CLASSIFIED CHARACTERISTIC SYMBOLS DEFINED IN QUALITY PROCEDURE 4.17

ISS	CHANGE	CHEC	DATE	ISS	CHANGE	CHEC	DATE
1	PR1969	PL	01-09-09				

PRO ENGINEER PART

THIS DRAWING/DOCUMENT IS COPYRIGHT AND THE PROPERTY OF HALDEX BRAKE PRODUCTS LIMITED. IT MUST NOT BE COPIED (IN WHOLE OR IN PART) USED FOR MANUFACTURE OR OTHERWISE DISCLOSED WITHOUT PRIOR WRITTEN CONSENT OF THE COMPANY. ANY COPIES OF THIS DRAWING/DOCUMENT MADE BY ANY METHOD MUST ALSO INCLUDE A COPY OF THIS LEGEND. © 2009

NOTE: UNLESS OTHERWISE STATED THE FOLLOWING APPLIES
1 ISO METHOD A PROJECTION.
2 S.I. UNITS.
3 SURFACE FINISH TO BS 308/BS 1134.
4 DIMS. APPLY AFTER CHEMICAL OR ELECTRO-PLATED FINISH.
5 WELD SYMBOLS TO BS 499.
6 D DATUM DIMENSIONS.
7 METRIC THREADS TO BS 3643/DIN 13.
8 UNIFIED THREADS TO BS 1580.

ASSOC SPECS.			
MATERIAL	MODEL:	DATE:	
	DRAWN: PL	DATE: 13-07-09	
HEAT TREATMENT	CHECKED IC / C Mc	DATE 02/09/09	
FINISH	APPROVED SPECIALIST JPH	DATE 02/09/09	
FORM ASSEMBLY	APPROVED FOR ISSUE JPH	DATE 02/09/09	

TITLE
HALDEX INFO CENTRE 2 - ADR

WAS

SHEET 2 OF 2

HALDEX BRAKE PRODUCTS LTD.
MOONS MOAT DRIVE, REDDITCH, WORCS. B98 9HA

PART No. 815_046_000_2

1

A2