Issued by	Introduction from serial No.	Date	Product affected	P/B No
Prashik.V		9/7/2026	EB+ Gen3	0281M

Title / Subject	Reg No.	Edition / Ref. No.	Page
EB+ Gen3 Switch box design update		02	**1** of **2**

EB+ Gen3 switch box design update

New design version of the switch box will be introduced into production starting from **02 January 2027**.

This design is part of our ongoing commitment to product improvement and meeting requirements. It maintains the expected functionality and reliability of the EB+ Gen3 system.

Switch box dimensions have increased from **68 × 68 × 53 mm** to **72 × 80 × 56 mm**.

The revised switch box features an updated housing design together with additional mounting points.

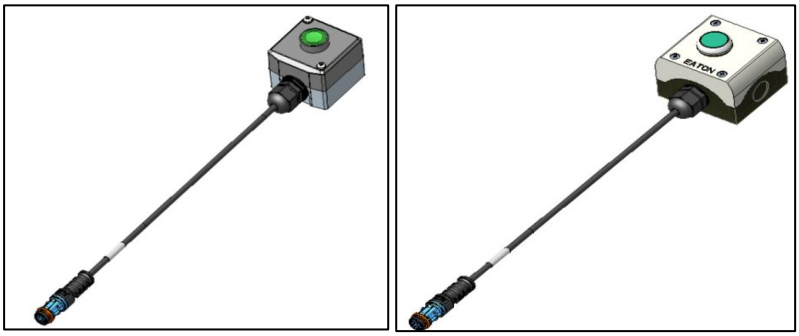

Current design | New design

For 815 031 001 (front mounted), mounting hole requirements:

Current design:

- 2 × holes for M4 fixings, spaced 54 mm apart.
- Mounting screws are required but are not supplied.

New design:

- 4 × Ø5 mm mounting holes, spaced 58.5 mm and 66.5 mm apart.
- Mounting screws are required but are not supplied.

This document contains confidential information and may not be photocopied, reproduced or transmitted in any form without the prior explicit permission of Haldex. Any contravention will be liable for damages and prosecution. All rights reserved.

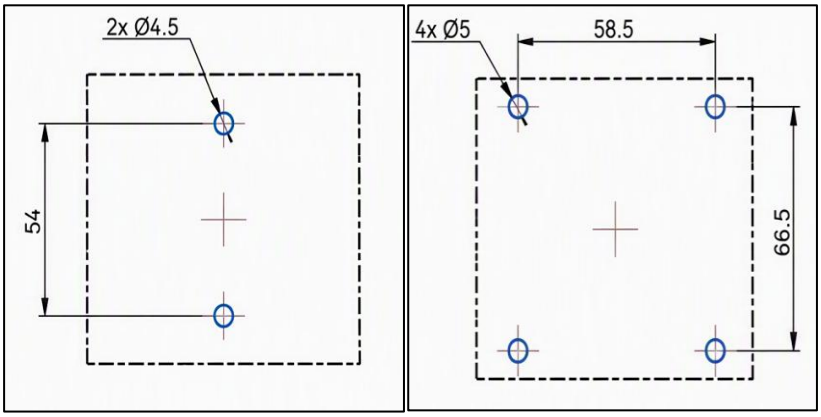

Current design New design

For 815 040 001 (rear mounted) mounting hole requirements:

Current design:

- 1 × Ø28 mm hole for the button.
- 2 × Ø4.4/4.6 mm mounting holes, spaced 50 mm and 54 mm apart.
- The mounting holes are equally spaced around the button.
- Reuse the mounting screws from the box assembly.

New design:

- 1 × Ø35 mm hole for the button.
- 4 × Ø5 mm mounting holes, spaced 48 mm and 57 mm apart.
- The upper-left mounting hole is positioned 28.5 mm and 28 mm from the Ø35 mm buttonhole. The button is not centrally positioned.
- Reuse the mounting screws from the box assembly.

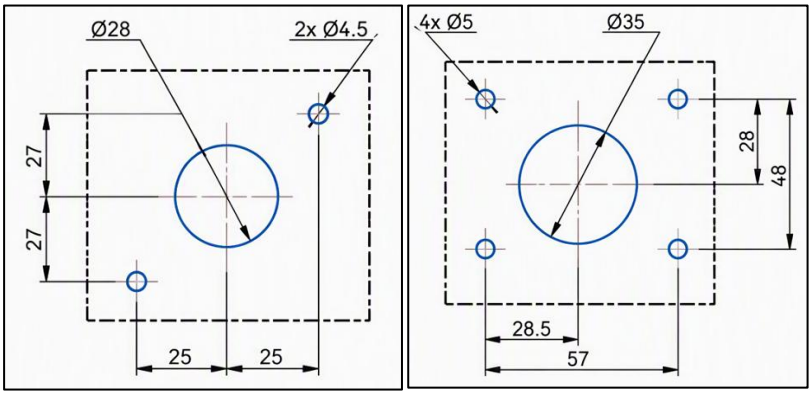

Current design New design

This document contains confidential information and may not be photocopied, reproduced or transmitted in any form without the prior explicit permission of Haldex. Any contravention will be liable for damages and prosecution. All rights reserved.