Agricultural trailer product catalogue

Europe



Edition 1

Haldex

Innovative Vehicle Solutions



Introduction

This catalogue provides an overview of the Haldex product range for agricultural trailers. For each product group you will find information that will make it easy to find the requested item.

Item inclusion or exclusion does not determine availability. For availability, please contact Haldex directly

If you cannot find an item:

- Check Findex at www.haldex.com/Findex or in www.haldex.com/trailer-application guide
- Contact Haldex directly

Findex

Trailer Application Guide

We hope you find this catalogue useful, and we welcome all feedback and suggestions for improvement.

Thank you for choosing Haldex.

Although Haldex does its best to ensure the accuracy of all information in this catalogue, Haldex assume no responsibility for any issues that may arise as a result of inaccurate data in this catalogue. Haldex reserves the right to amend this information without notice.

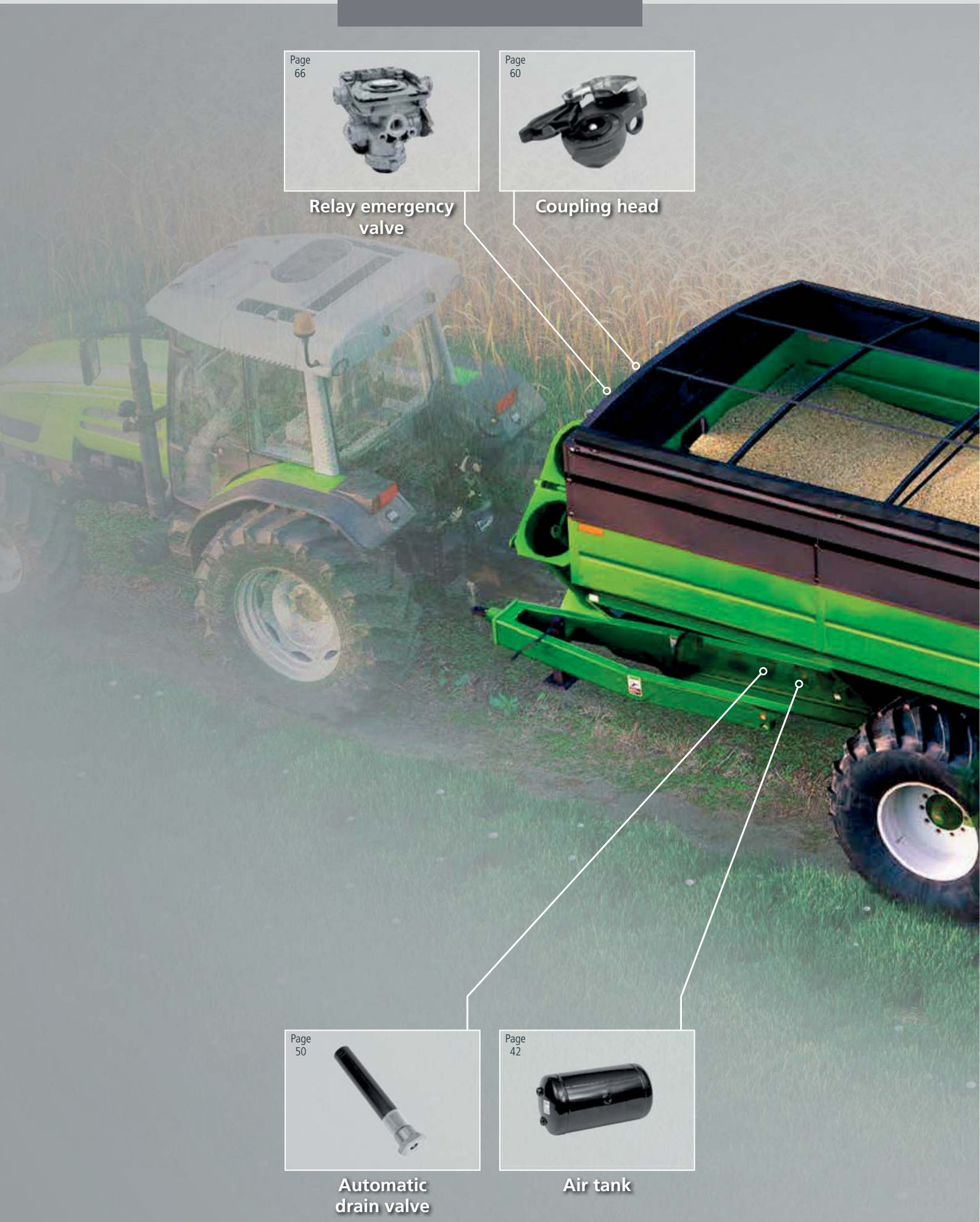
Page 66
Relay emergency valve
Page 60
Coupling head
Page 50
Automatic drain valve
Page 42
Air tank



Page 100



EB+ Gen3
Electronic braking system

Page 95



Load sensing valve

Page 140



Levelling valve

Page 128



Double diaphragm spring brake
Blue Seal

Page 135



AA1, S-ABA
Automatic brake adjusters

Page 116



Brake chamber



DIN/ISO Symbols	Page
Introduction	10
Symbols	11
Ports	22

Air distribution	Page
Saddle for air tank	40
Air tank	42
Air coil	44

Schematic design	Page
380 102 950	27
380 095 550	29
380 060 960	31
380 066 250	33
380 071 508	35
380 082 160	37

Air treatment	Page
In-line filter	48
Manual drain valve	49
Automatic drain valve	50



Air brake	Page
Check valve	54
Pressure protection valve	55
Dummy coupling	58
Coupling head	60
Relay emergency valve	66
Pressure limiting valve	69
Shunt valve	74
Park and shunt valve	77
Relay valve	79
Quick release valve	81
Regulating valve	85
Mechanical load sensing valve	89
Pneumatic load sensing valve	95
Electronic braking system	100

Actuation	Page
Brake chamber	116
Double diaphragm spring brake - Blue Seal	128
Piston cylinder	132
Automatic brake adjusters	135

Air suspension	Page
Levelling valve	140



DIN/ISO SYMBOLS

Introduction	10
Symbols	11
Controls	12
Warning devices	13
Test and filling connections	13
Valves	14
Ports	22

Introduction

The following drawing and function symbols comply with DIN 74 253, January 1994 edition 1, and DIN ISO 1219, June 2012 edition.

The drawing symbols (DIN 74 253) can be used for the schematic representation of braking systems (circuit plan) in motor vehicles.

The ports on the symbols are shown in accordance with DIN ISO 6786, December 1981 edition. These identifications are not part of the symbols, but can be added to improve comprehension.

The function symbols (DIN ISO 1219) are intended to explain the internal operations of components or parts thereof. They consist of one or more basic signs and in general one or more function signs.

The components are shown in the off position in circuit diagrams, and if this is not present, in the initial position of the control system. If this is not the case, a note must be provided. e.g. working position.

Note:

The drawing and function symbols shown on the following pages are an extract from the corresponding DIN. Only those symbols are shown here that are necessary for trailer vehicles.

Drawing symbols in accordance with DIN 74253	Function symbols in accordance with DIN ISO 1219	Description
		General line
		Line marking: direction of flow and medium
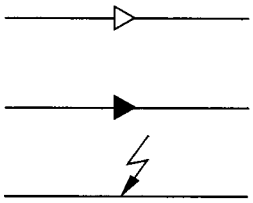	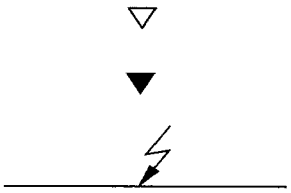	Pneumatics Hydraulics Electrics
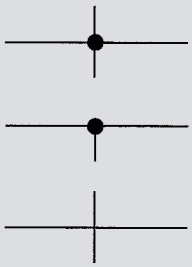	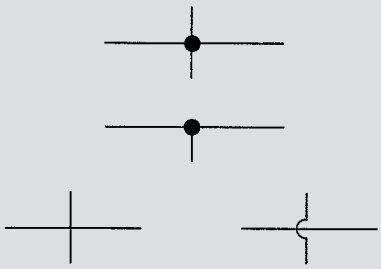	Crosses: with connection without connection
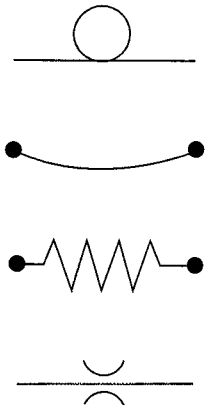		Arrangement of lines: loop Flexible lead/line for connecting moveable parts Coiled tubing Throttle in the line
		Circle symbol for different applications: pumps, compressors, motors, etc
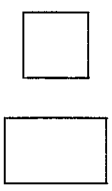	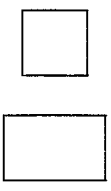	Square and rectangle: symbols for equipment, cylinders and controls
		Diamond for filters, separators, etc.

Drawing symbols in accordance with DIN 74253	Function symbols in accordance with DIN ISO 1219	Description
		Border for sub-assemblies: several combined in the block
		Arrows to show: the direction of flow
	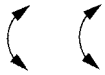	Rotability, direction of rotation
		Travel and direction of flow within the equipment
		Diagonal arrows as sign of adjustability
Controls		
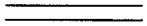	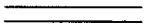	Linkage, lever and mechanical connection
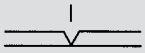	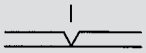	Mechanical catch for pre defined switch position
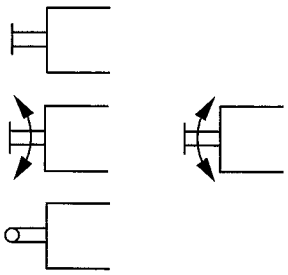	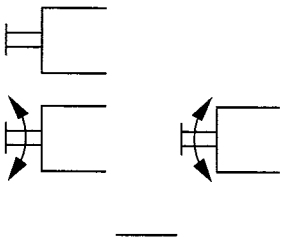	Mechanical control: general Rotating Via linkage
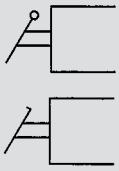	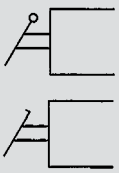	Mechanical control via hand lever Mechanical control via running plate
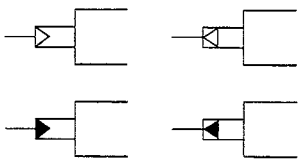	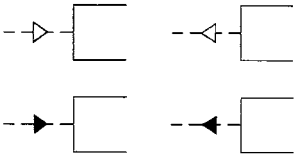	Triggers: pneumatics hydraulics
	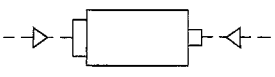	via control surfaces
	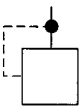	via cut-off ports in the equipment

Drawing symbols in accordance with DIN 74253	Function symbols in accordance with DIN ISO 1219	Description
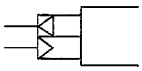	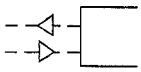	Multiple control: twin via pressure drop via increase in pressure
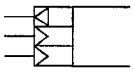	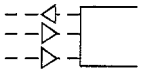	triple
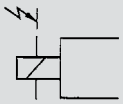	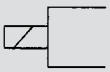	Electrical control: via solenoid valve
	—	Automatic brake adjuster: manual
	—	automatic
Warning devices		
		Pressure gauge: single
	—	Pressure gauge: double
	—	low pressure indicator
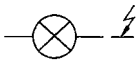	—	lamps
	—	buzzers
Test and filling connections		
	—	Testing and filling ports : within the leads
	—	on the equipment
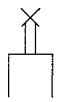	—	on the equipment with mechanical control
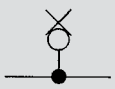	—	Filling connection only: no possibility to remove

Drawing symbols in accordance with DIN 74253	Function symbols in accordance with DIN ISO 1219	Description
Valves		
		General valve: square symbol
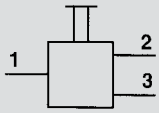	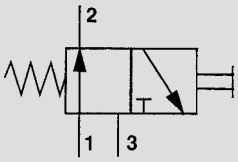	3/2-way valves manually operated
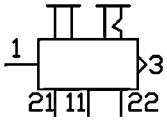	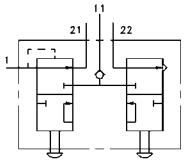	Twin release valve
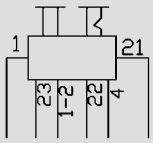	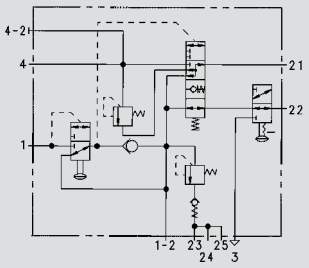	Trailer Control Module
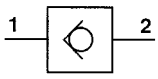		Non return valve
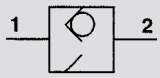	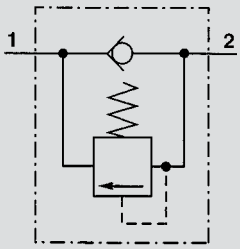	Non return valve with restricted backflow
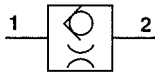	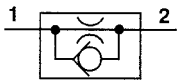	One-way restrictor
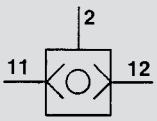	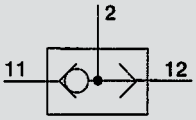	Two-way valve

Drawing symbols in accordance with DIN 74253	Function symbols in accordance with DIN ISO 1219	Description
Valves		
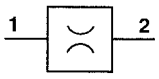	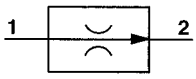	Throttle valve
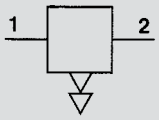	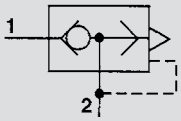	Quick exhaust valve
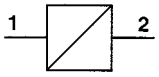	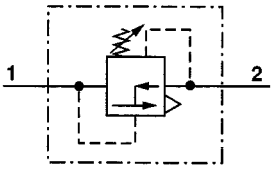	Proportioning pressure regulator (control valve) with kinked characteristic curve
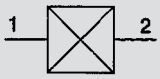	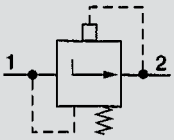	Proportioning pressure regulator (control valve) with straight characteristic curve
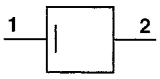	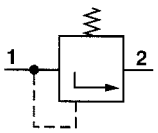	Overflow valve: without backflow
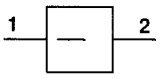	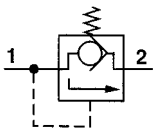	with backflow
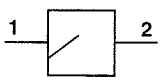	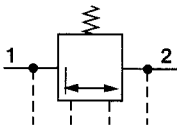	with restricted backflow
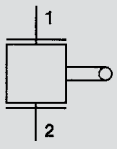	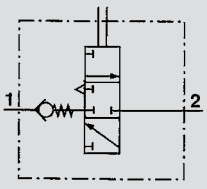	Height control valve: with one energy outlet
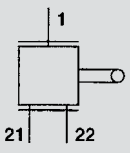	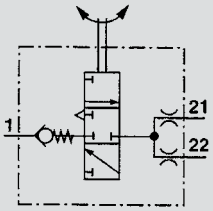	with two unequal energy outlets

Drawing symbols in accordance with DIN 74253	Function symbols in accordance with DIN ISO 1219	Description
Valves		
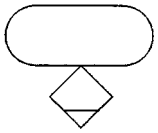	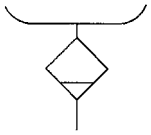	Water-drainage valve manually operated
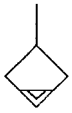	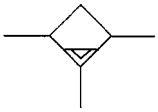	Automatically operated
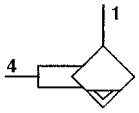		Controlled by impulse
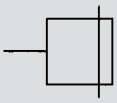	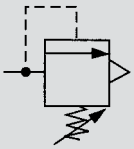	Safety valve
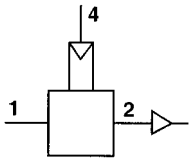	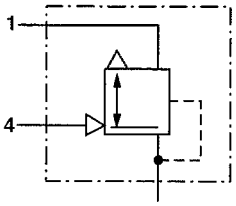	Relay valve
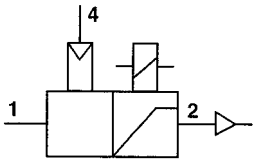	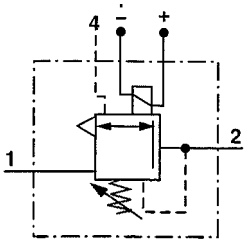	With solenoid relay valve
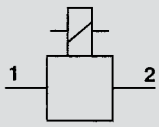	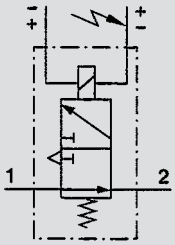	Solenoid valve
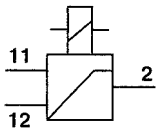	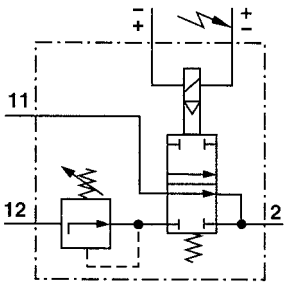	Electromagnetically operated brake valve with pressure control

Drawing symbols in accordance with DIN 74253	Function symbols in accordance with DIN ISO 1219	Description
Valves		
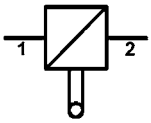		Control valve
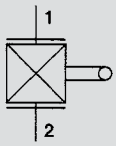	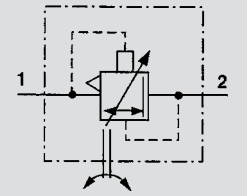	Automatic braking force regulator mechanically controlled
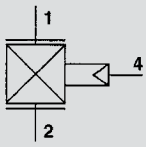		Pneumatically controlled
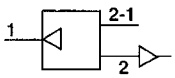	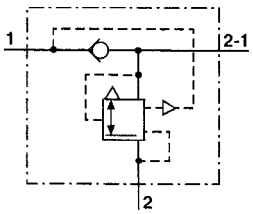	Trailer brake valve: single line
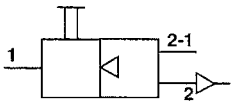	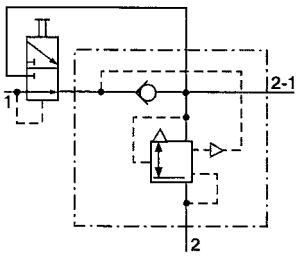	with release valve
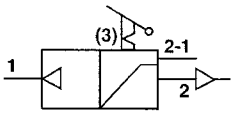	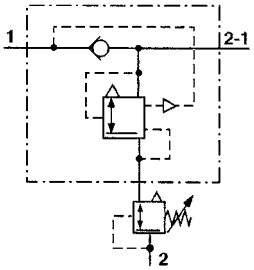	with manually adjustable braking force regulator
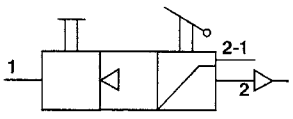	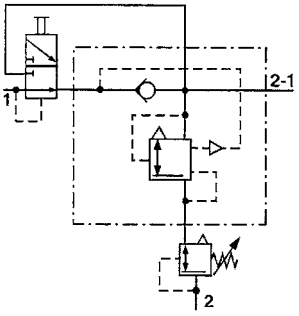	with release valve and manually adjustable braking force regulator

Drawing symbols in accordance with DIN 74253	Function symbols in accordance with DIN ISO 1219	Description
Valves		
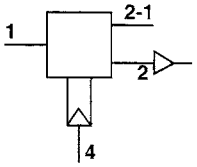	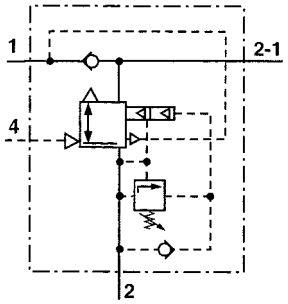	Trailer brake valve dual line without release valve
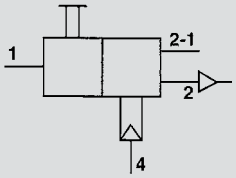	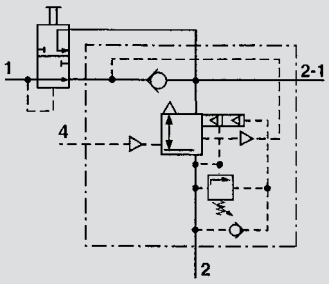	Trailer brake valve dual line: with release valve
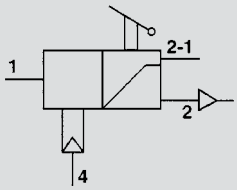	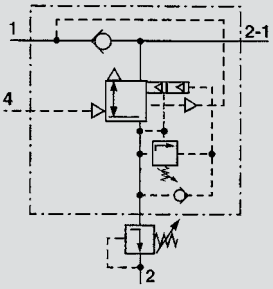	with manually adjustable braking force regulator
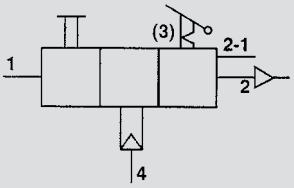	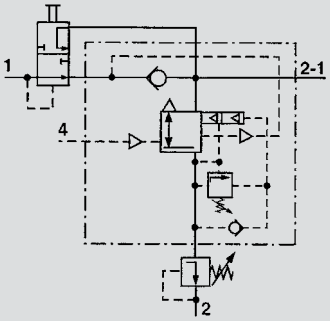	with manually adjustable braking force regulator and release valve
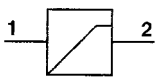	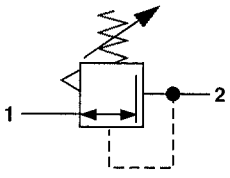	Pressure control valve
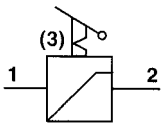		Manually operated

Drawing symbols in accordance with DIN 74253	Function symbols in accordance with DIN ISO 1219	Description
Valves		
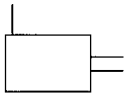	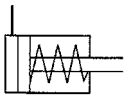	Compressed air cylinder
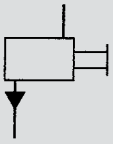		Hydraulic cylinder: master cylinder, single circuit
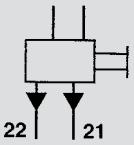		master cylinder, dual circuit
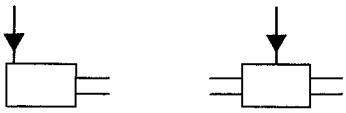		Hydraulic cylinder: slave cylinder, single circuit
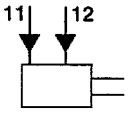		slave cylinder, dual circuit
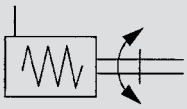	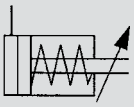	Piston spring brake: pulling with release device
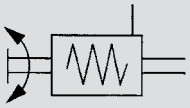	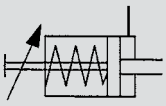	pressing with release device
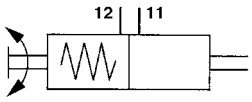	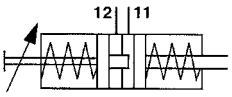	Double diaphragm spring brake: pressing with release device
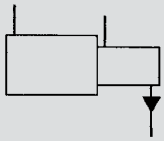	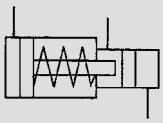	Servo cylinder with hydraulic master cylinder
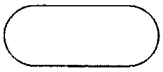	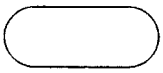	Air brake tank
	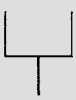	Fluid container

Drawing symbols in accordance with DIN 74253	Function symbols in accordance with DIN ISO 1219	Description
Valves		
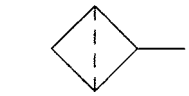		Suction filter
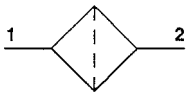	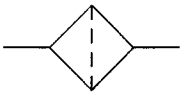	Line filter
		Shut-off valve: without venting
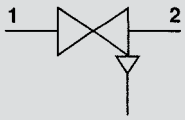		with venting
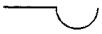		Coupling head : without shut-off device
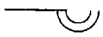		with shut-off device
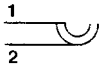	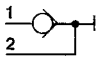	with shut-off device and two connection
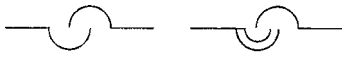		Coupled
		with filter
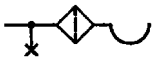		with filter and test connection
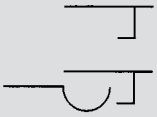		Dummy coupling coupled
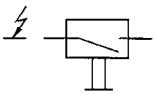	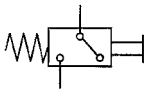	Electric switch, no contact, mechanically controlled
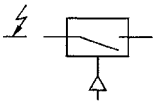	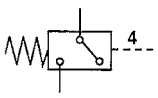	No contact, pneumatically controlled
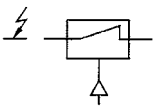	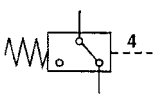	Contact, pneumatically controlled
		General symbol

Drawing symbols in accordance with DIN 74253	Function symbols in accordance with DIN ISO 1219	Description
Valves		
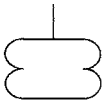		Pneumatic bellows
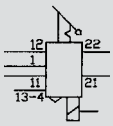		COLAS: dual circuit
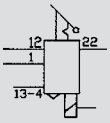		single circuit
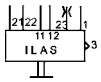		ILAS: manually controlled
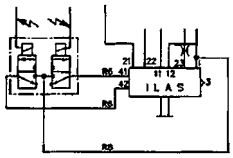		manually controlled and electrically controlled
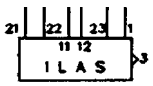		automatically controlled
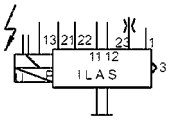		automatically controlled with electric control
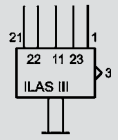		ILAS III: manually controlled
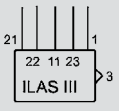		automatically controlled
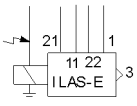		ILAS-E
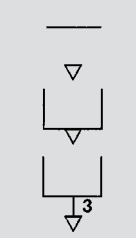		Venting Venting outlet ventilation With vent line
		Metal bellows

Ports

Identification of ports on components in air braking systems as per DIN ISO 6786

A standard has been drawn up in FAKRA and ISO regarding the identification of ports on components in air braking systems, and appeared as a Standard under the number DIN ISO 6786 in December 1981.

This Standard includes DIN 74 254, 04/1976 edition, in which the international standard ISO 6786, 06/1980 edition was incorporated unchanged.

The main features of the standard are that ports on components are:

Identified by numbers and not letters. This avoids the possibility of letters being incorrectly understood in different countries.

Not numbered consecutively, but instead the numbers of the port identification should themselves give an indication of the function of the port in the unit.

The identification consists of a number with up to two digits. The meaning of the first digit are:

- 0 vacuum connection
- 1 supply port
- 2 delivery port
- 3 port to atmosphere (exhaust)
- 4 control port
- 5 not used
- 6 not used
- 7 antifreeze port
- 8 lub. oil port (compressor)
- 9 coolant port (compressor)

A second digit is then to be added if a number of ports of the same kind are possible or present, e.g. where there are several circuits. The meaning of the second digit is left to the manufacturer. It should start at 1 and rise consecutively, e.g. 21, 12, 43, etc.

For example:

› 21 = 1st delivery port

› 12 = 2nd supply port

› 43 = 3rd control port

If a modular system is employed, it may be necessary to deviate from this.

The following numbers may not be freely allocated:

› 71 antifreeze inlet

› 72 antifreeze outlet

› 81 lub. oil inlet

› 82 lub. oil inlet

› 91 coolant inlet

› 92 coolant outlet

Where there are a number of ports of the same kind coming from a single space, they are not distinguished. They are given the same identification. If a port can fulfil several functions in one and the same installation, it must be identified by two (first) digits. These are to be separated by a horizontal dash. See the example.

If a connection can fulfil different functions in different installation instances, the identification must be agreed between the operator and manufacturer (e.g. directional control valves). The identification should be shown on the components next to the ports, and can also be situated next to the drawings of the ports in braking system layout diagrams. It applies to air braking systems for motor vehicles and their trailers, including cases where the transmission equipment to the part is in part hydraulic.

A relay emergency valve is given here as an example.

The ports here are:

› 1 supply port from the supply coupling head

› 2-1 delivery and supply port (connection to the air tank)

› 2 delivery port to the next brake component

› 4 control port from maintenance coupling head

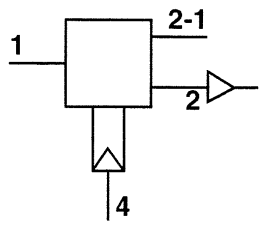



SCHEMATIC DESIGN

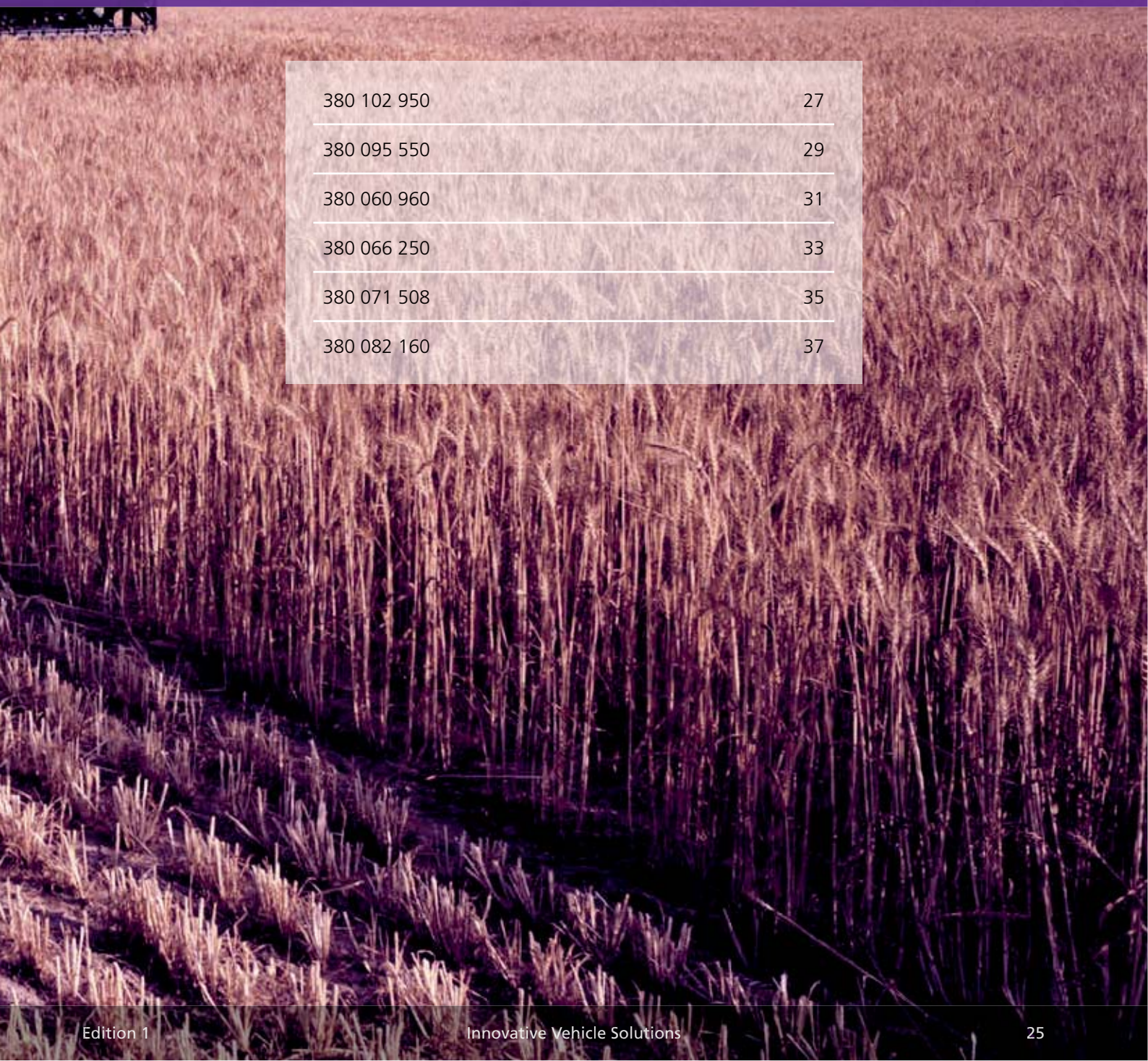

380 102 950	27
380 095 550	29
380 060 960	31
380 066 250	33
380 071 508	35
380 082 160	37

Item	Quantity	Description	Part number
1	1	Coupling head (emergency)	334 086 ...
2	1	Coupling head (service)	334 085 ...
3	3	Line filter (an option if no coupling head is used with filter)	310 005 011
4	3	Dummy coupling	334 028 001
5	1	Shunt valve, automatic (single line)	352 001 001
6	1	Relay emergency valve, single/dual line	351 001 141
7	1	Air tank (EN), V = ... litres	030 09
8	1	Manual drain valve	315 019 001
9	2	Yoke	003 6164 09
10	2	Diaphragm chamber, type	120 / 123 ...
11	2	Yoke	003 0336 09
12	2	Diaphragm chamber, type	120 / 123 ...
13	2	Test point (ISO 3583), M 16*1.5	... ...
14	1	Test point (ISO 3583), M 22*1.5	... ...
15	1	Drain valve	356 005 ...
16	1	Pressure limiting valve, settable	357 012 031
17	1	2-way valve	333 001 201
18	1	Coupling head, single-line, with pin	334 007 ...
19	1	Coupling head, single-line, automatic	334 082 ...
20	1	Coupling head, dual-line, automatic (emergency)	334 063 ...
21	1	Coupling head, dual-line, automatic (service)	334 064 ...
22	2	LSV, mechanically controlled	601 ... ...
23	2	Test point (ISO 3583), M16*1.5-D=10mm	... ...

Dual-line braking system in accordance with the German road traffic licensing Act; agricultural or forestry vehicles (StVZO/lof) for twin-axle trailers (max. <= 25 km/h)

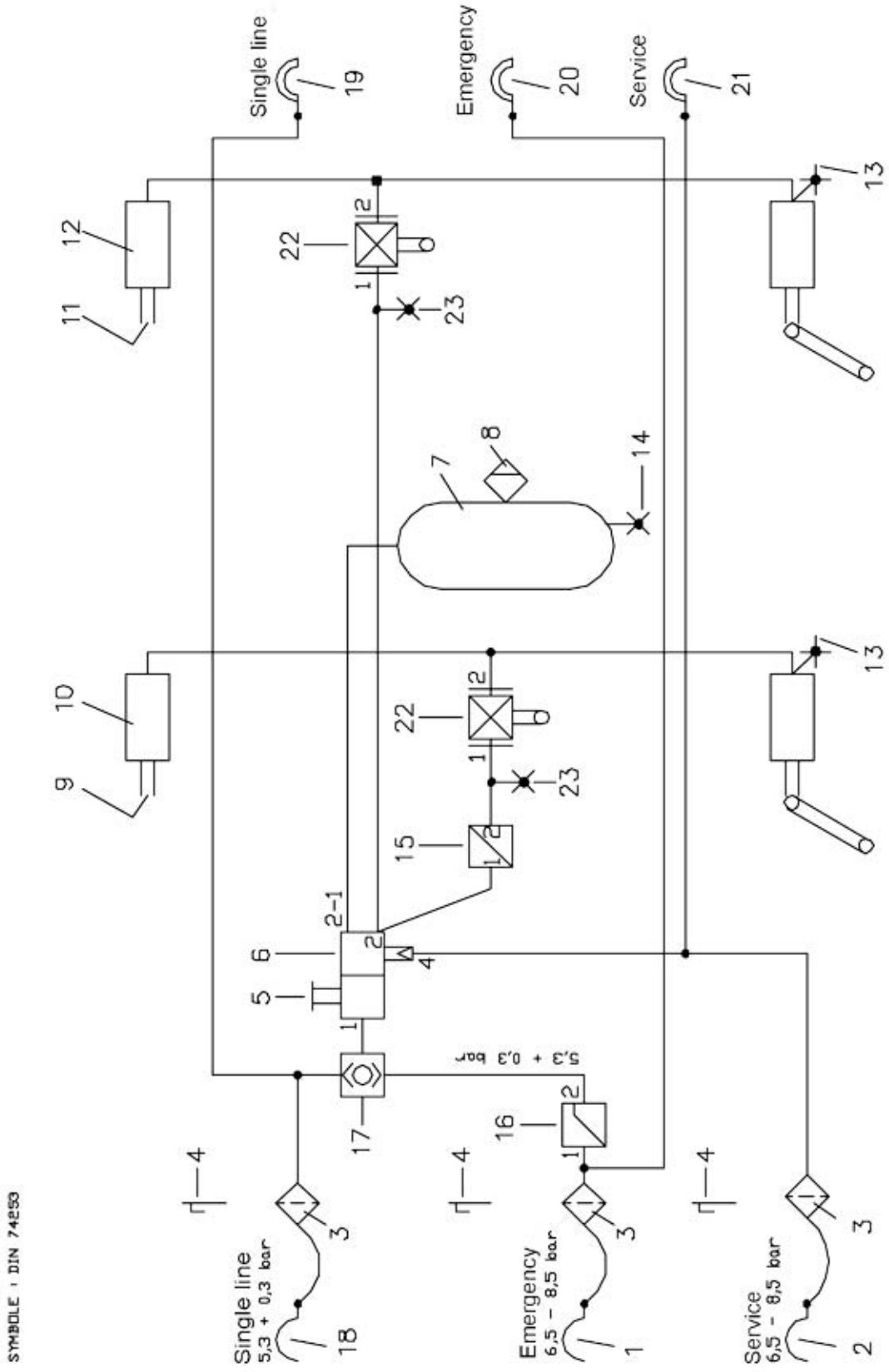

Item	Quantity	Description	Part number
1	1	Coupling head (emergency)	334 086 ...
2	1	Coupling head (service)	334 085 ...
3	2	Line filter (an option if no coupling head is used with filter)	310 005 011
4	1	Dummy coupling	334 028 001
5	1	Relay emergency valve with shunt valve	350 026 ...
6	1	Manual load valve	352 011 ...
7	2	Test point (ISO 3583) , M 12*1.5	318 036 001
8	1	Drain valve with regulation control	356 005 ...
9	1	Air tank (EN), V >=...litres	030....09
10	1	Manual drain valve	315 019 ...
11	2	Yoke	003 6164 09
12	2	Diaphragm chamber, type...	120 / 123 ...
13	2	Yoke	003 0336 09
14	2	Diaphragm chamber, type.....	120 / 123 ...
15	2	Test point (ISO 3583), M 16*1.5	032 790 060 00
16	1	Test point (ISO 3583), M 22*1.5	032 790 070 00
17	1	Relay valve option	355 018 ...
18	1	Coupling head, dual-line, automatic (emergency)	334 063 ...
19	1	Coupling head, single-line, automatic (service)	334 064 ...
20	1	Pressure control valve, adjustable	357 012 031

Dual-line braking system in accordance with the German road traffic licensing Act; agricultural or forestry vehicles (StVZO/lof) for twin-axle trailers with relay emergency valve

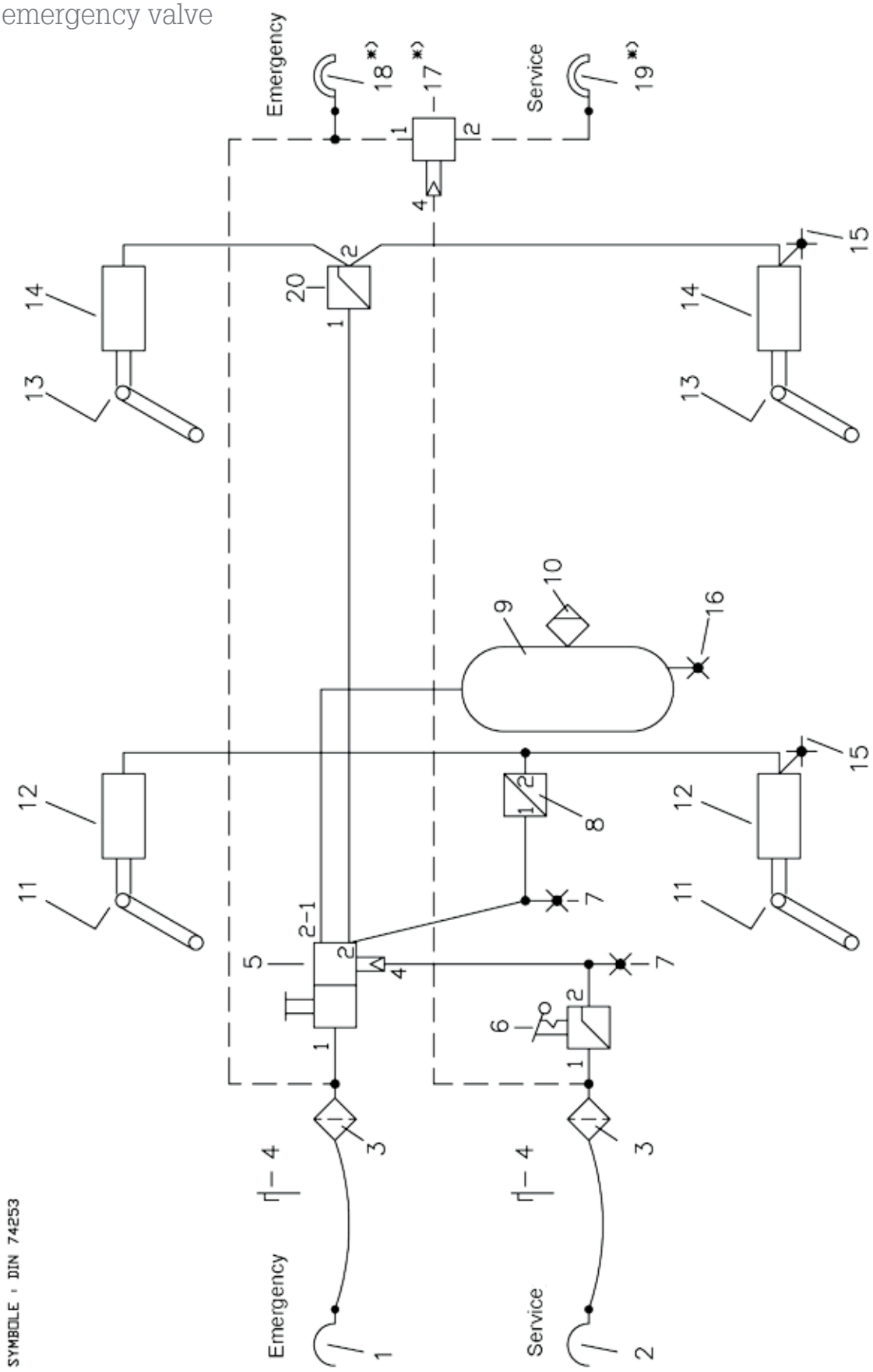

*) Second trailer connection pos. 17, 18, 19 = option !

Item	Quantity	Description	Part number
1	1	Coupling head (emergency)	334 086 ...
2	1	Coupling head (service)	334 085 ...
3	2	Line filter (an option if no coupling head is used with filter)	310 005 011
4	2	Dummy coupling	334 028 001
5	1	Relay emergency valve with shunt valve	350 026 ...
6	1	Air tank (EN), V = ... litres	030 09
7	1	Manual drain valve	315 019 ...
8	1	Load sensing valve, mechanically controlled	601 ... ...
9	1	Load sensing valve, pneumatically controlled	602 005 ...
10	1	Load sensing valve, mechanically controlled	601... ...
11	1	Load sensing valve, pneumatically controlled	602 005 ...
12	1	Drain valve	356 005 ...
13	1	Shunt valve for 1 axle	352 005 101 or 352 007 401
14	2	Yoke, round hole (if needed)	003 6164 09
15	2	Diaphragm chamber, type	120 / 123 ...
16	2	Yoke, slot (if needed)	003 0336 09
17	2	Diaphragm chamber, type	120 / 123 ...
18	1	Test point (ISO 3583), M 22*1.5	... ...
19	2	Test point (ISO 3583), M 16*1.5	... ...
20	2	Test point simulator for pneumatic load sensing valve	... ...
21	1	Test point (ISO 3583) , M 12*1.5	... ...

Dual-line compressed-air braking system for twin-axle trailers

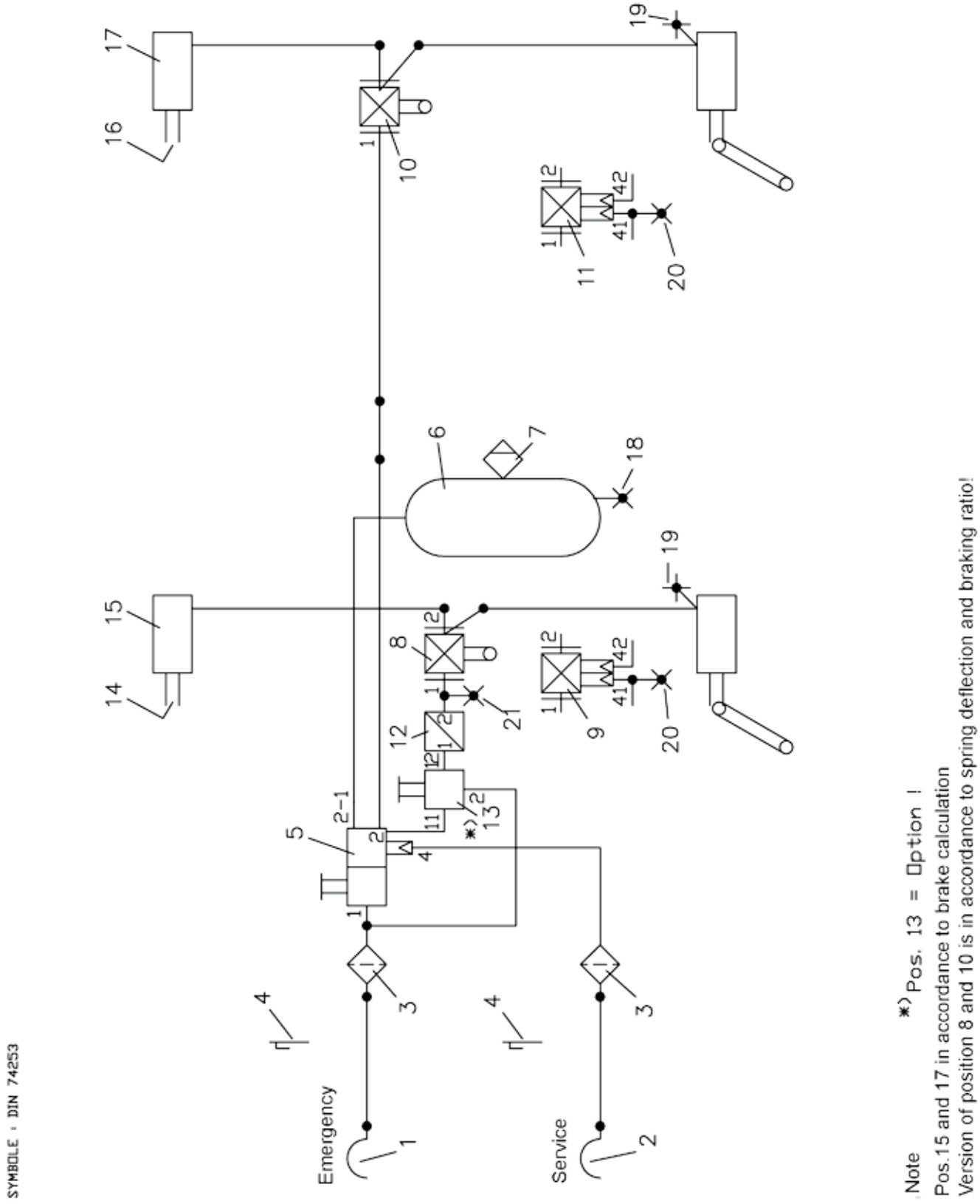

Item	Quantity	Description	Part number
1	1	Coupling head (emergency)	334 086 ...
2	2	Line filter (an option if no coupling head is used with filter)	310 005 011
3	1	Relay emergency valve with manual low load adjustment valve	350 027 ...
4	1	Relay emergency valve with shunt valve	350 026 ...
5	1	Relay emergency valve with manual low load adjustment valve and shunt valve	350 028 ...
6	1	Coupling head	334 085 ...
7	1	Air tank (EN), V = ... litres	030 09
8	1	Manual drain valve	315 019 ...
9	2	Saddles for air tank, D = ...mm	030 ... .09
10	2	Diaphragm chamber, type	120 / 123 ...
11	2	Diaphragm chamber, type	120 / 123 ...
12	1	Test point (ISO 3583), M 16*1.5	... ...
13	1	Test point (ISO 3583), M 22*1.5	... ...
14	2	Dummy coupling	334 028 000
15	1	Manual screwing jack (option)	... ...
16	4	Yoke, slot	003 ... .09

Notes:

Items 3 and 5 are alternatives for different unladen weights
Item 4 replaces item 3 or 5 where there is a constant load

Dual-line compressed-air braking system up to 40 km/h for for centre-axle trailers

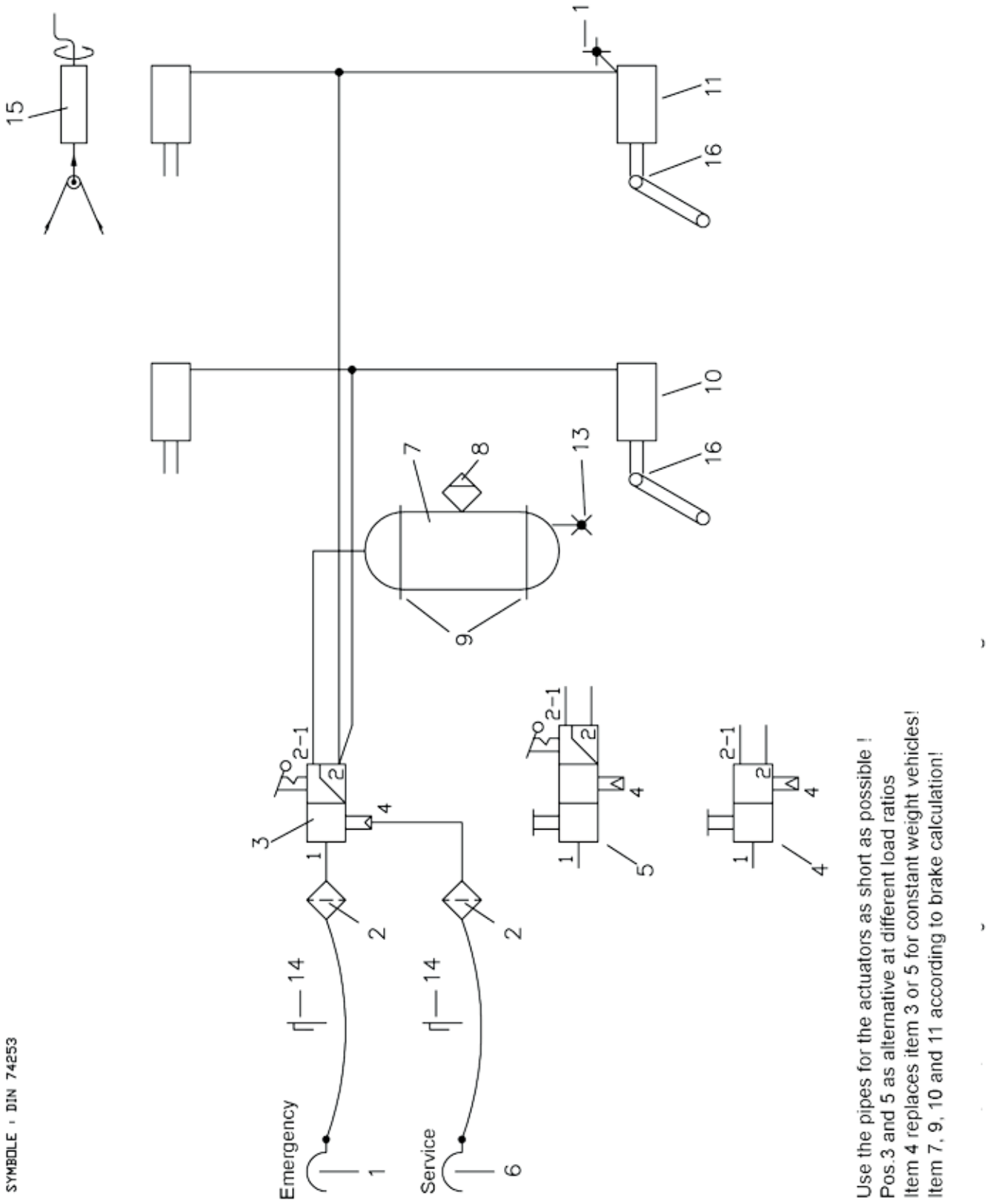

Item	Quantity	Description	Part number
1	1	Coupling head (emergency)	334 086 ...
2	1	Coupling head (service)	334 085 ...
3	2	Line filter (an option if no coupling head is used with filter)	310 005 011
4	1	Relay emergency valve with shunt valve	350 026 ...
5	1	Air tank (EN), V = ... litres	030 09
6	1	Manual drain valve	315 019 ...
7	1	Test point (ISO 3583), M 22*1.5	032 780 070 00
8	1	Load sensing valve, mechanically controlled	601 ... ...
9	1	Test point (ISO 3583), M 12*1.5	032 465 171 22
10	1	Drain valve	356 005 ...
11	2	Yoke, slot	003 0336 09
12	2	Diaphragm chamber, type	120 / 123 ...
13	1	Yoke, slot	003 0336 09
14	2	Diaphragm chamber, type	120 / 123 ...
15	2	Test point (ISO 3583), M 16*1.5	032 790 060 00
16	2	Dummy coupling	334 028 000
17	2	Spring block for load sensing valve with twin axle	003 4802 09

Dual-line compressed-air braking system for centre-axle trailers (two axles)

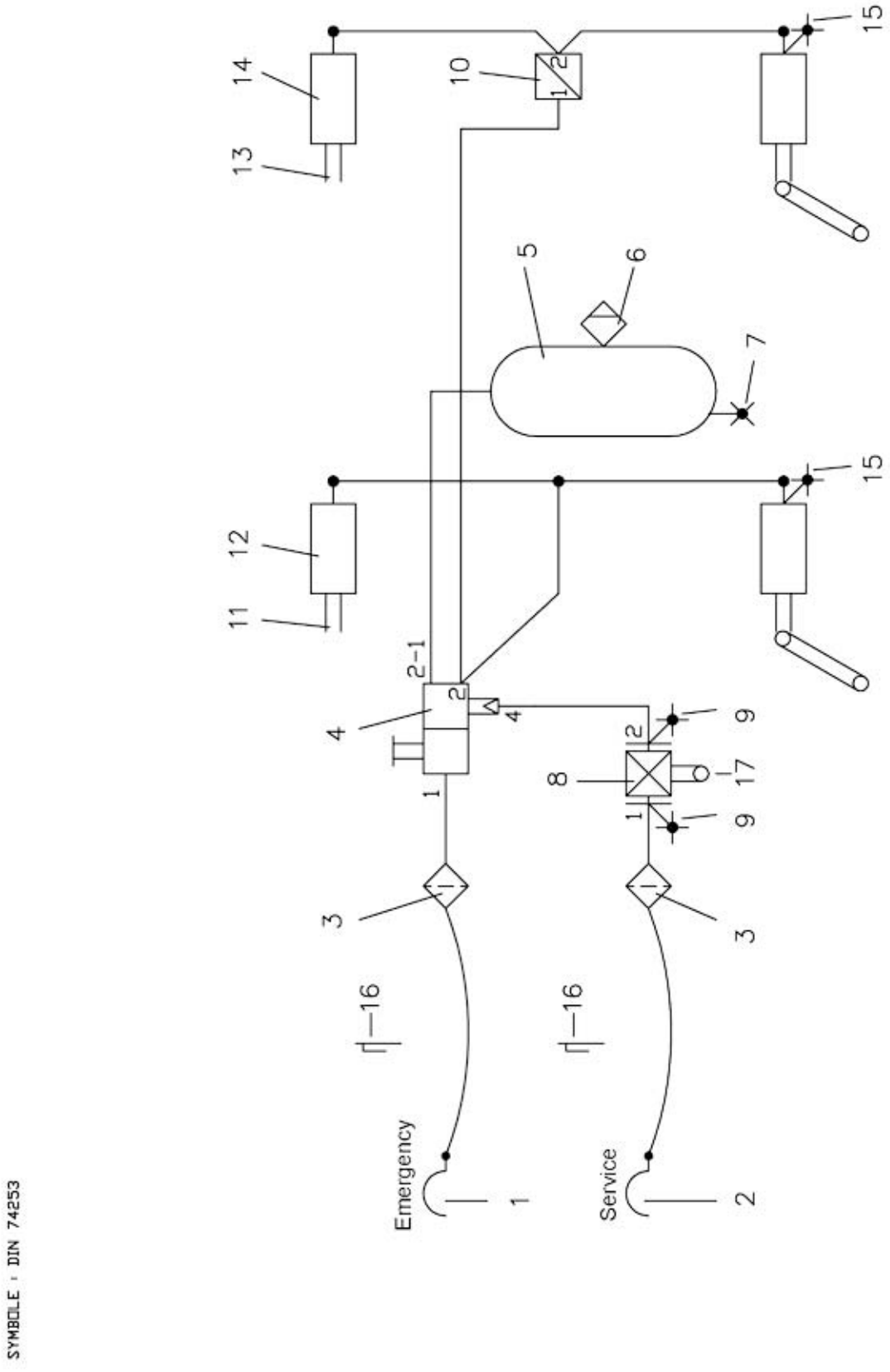

Item	Quantity	Description	Part number
1	1	Coupling head (emergency)	334 086 ...
2	1	Coupling head (service)	334 085 ...
3	2	Line filter (an option if no coupling head is used with filter)	310 005 011
4	1	Relay emergency valve with shunt valve	351 008 ...
5	1	Air tank (EN), V = ... litres	030 09
6	1	Manual drain valve	315 019 ...
7	1	Load sensing valve, mechanically controlled	601 ... ...
8	1	Drain valve	356 005 ...
9	2	Dummy coupling	334 028 000
10	1	Shunt valve	352 018 ...
11	2	Yoke, round hole	003 6164 09
12	2	Diaphragm chamber, type	120 / 123 ...
13	2	Yoke, slot	003 0336 09
14	2	Diaphragm chamber, type	120 / 123 ...
15	2	Test point (ISO 3583), M 16*1.5	032 790 060 00
16	2	Test point (ISO 3583), M 22*1.5	032 790 070 00
17	2	Test point (ISO 3583), M 12*1.5	032 465 171 22
18	2	Spring block for load sensing valve with twin axle	003 4802 09

Dual-line compressed-air braking system for centre-axle trailers with bogie-axle assembly

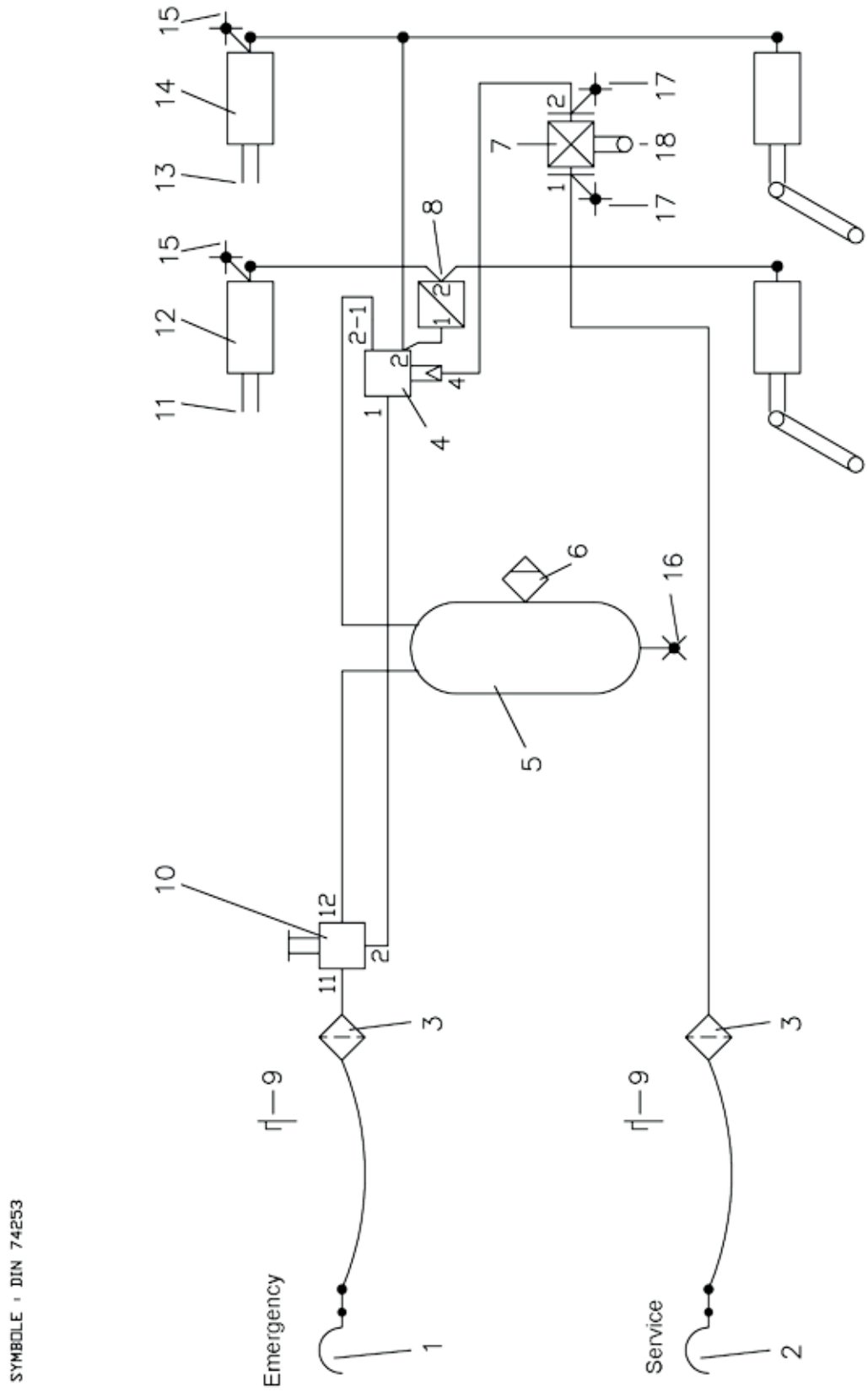



AIR DISTRIBUTION

Saddle for air tank	40
Air tank	42
Air coil	44

Saddle for air tank

Use

Securing the air tank

Installation

The tank is secured using the saddle or the bracket on the tank, if there is one. The saddle must be mounted clear of the seams at the tank ends and must not exert any stresses on the tank that might adversely affect its safety in operation. Insulation strips must be placed between the tank and saddle if necessary. Tanks can be installed horizontally or vertically. Make sure that a water drain connection is at the lowest point of the tank. Take appropriate measures to ensure that all condensation is drained or that condensation cannot accumulate.

Testing

- Mounting
- Cracks
- Check the insulation strips for damage



032500001S (Option A)



0307031000 (Option B)

Versions

Part number	Diameter (mm)	Belt	Nut	Version	Note
0 307 020 600	206	with	1	B	
0 322 000 01S	206	with	2	A	pair
0 307 024 600	246	with	1	B	
0 324 000 01S	246	with	2	A	pair
0 307 027 600	276	with	1	B	
0 304 060 01	276	with	2	A	pair
0 307 031 000	310	with	1	B	
0 327 530 01S	310	with	2	A	pair
0 307 039 600	396	with	1	B	
0 325 000 01S	396	with	2	A	pair
0 324 000 01S	246	with	2	A	pair
0 325 000 01S	396	with	2	A	pair

Air tank

Use

The air reservoir stores the compressed air produced by the compressor.

Description

The air reservoir consists of a cylindrical body and dished ends with sockets welded into them. A connection is provided for draining the reservoir. Both interior and exterior surfaces of the reservoir are coated with an anti-rust agent. The reservoirs correspond with DIN 74281.

One of the dished ends bears the brand plate showing following data:

- Manufacturer
- Part No.
- Factory No.
- Maximum operating pressure in bar
- Year of manufacture
- Volume in litres
- ZU-No (approval No)



030 3.. ... Steel tank

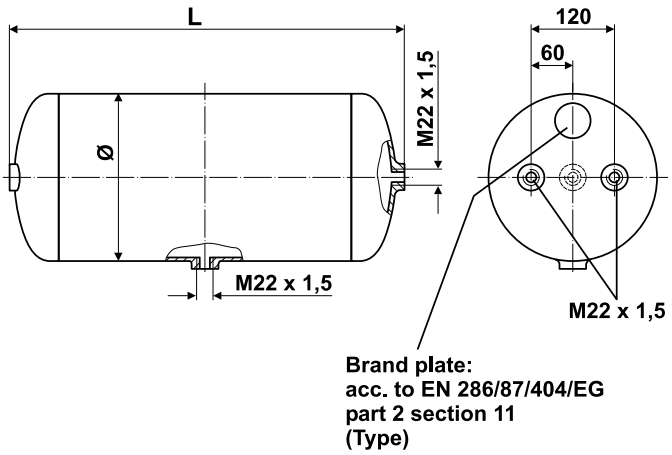

Installation

The air reservoir should be mounted by means of brackets, in the lowest position possible so that the supply from the compressor and pressure governor runs downwards to the reservoir. It is particularly important that the pipe line to the air reservoir cannot form water traps, in order to prevent water in the system freezing. The connection for the drain valve must point downwards and be easily accessible. The reservoirs are subjected to a type approval test, therefore welding on reservoirs is not permitted.

Maintenance

- Drain air reservoir daily
- Replace damaged air reservoirs

Testing

- Check that air tank is securely attached and free from leaks
- Check for leaks, check line ports or manual drain valve
- Check pressure loss as per the statutory requirements of the StVZO or EC guidelines
- No interior or exterior corrosion or other damage visible
- The air tanks must have the specified labelling (data plate)
- After installation has been completed, the braking system must be checked for correct function and roadworthiness

Technical data

Operating pressure max.	12.5 bar
Operating temperature	-40°C + 100°C
Thread	M 22 X 1.5
Surface protection:	Corrosion protection by powder coating (black RAL 9005)

Versions

Steel tank (p_e max. 12,5 bar)

version according to EN 286 Part 2

Versions

Part number	Volume (litres)	Diameter (mm)	Length L (mm)	Ports
030 3502 09	10	206	370	3
030 3505 09	20	206	690	4
030 3506 09	20	246	500	4
030 3509 09	30	246	720	4
030 3512 09	40	276	760	4
030 3501 09	8,5	206	320	4
030 3515 09	40	246	940	4
030 3516 09	60	276	1100	4
030 3517 09	60	396	580	4
030 3518 09	60	246	1350	4
030 3520 09	80	396	750	4
030 3522 09	100	396	915	4
030 3608 09	60	310	895	4
030 3620 09	40	310	620	4
030 3636 09	15	206	530	3

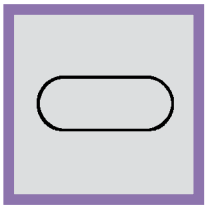

Symbol

Air coil

Use

Connecting the air braking system of the tractor unit to that of the semi-trailer, or connecting different length components within an air braking system.

Description (TÜV-tested)

Certificate no. TÜV EMA-7.970185378

All compressed air coils with plastic colour-coded kink protection are TÜV-tested in order to comply with the demanding safety parameters of DIN 74323 - the acknowledged standard for compressed air coils.

- M18 (internal thread) connectors to push on with “rotating nuts”
- Moulded colour-coded kink protection
- Supplied with unique retaining loops as standard
- 20-turn coloured coils printed as per DIN 73378
- Tested with 10,000 bends (to ISO 7375)



033 016 009



033 016 509

Installation

Where two matching coupling heads need to be coupled together, particularly when they are fitted with covers, make sure that there is sufficient free space around the fixed coupling head.

Road trains and articulated trains

The position and length of the lines is governed by the arrangement of the coupling heads and the maximum angle of 75° (90° for an articulated train) between the centre line of the drawbar and the longitudinal axis of the tractor unit. Complete freedom of movement without any tensile force in the lines and without the lines chafing against each other must be ensured up to an angle of 60° (75° in the case of articulated trains). Movement without damaging the lines must be possible at angles between 60° and 75° (75° and 90° for articulated trains).

Testing

For condition, porosity, cracks, chafing and leaks

Technical data

Tubing:	12 x 1.5
Medium:	air
Operating pressure:	p_e max. 10 bar
Operating temperature:	-40°C to +70°C
Thread:	M 18 x 1.5

Versions

033 0160 09: 4 metres effective length for service (yellow)

033 0165 09: 4 metres effective length for supply (red)

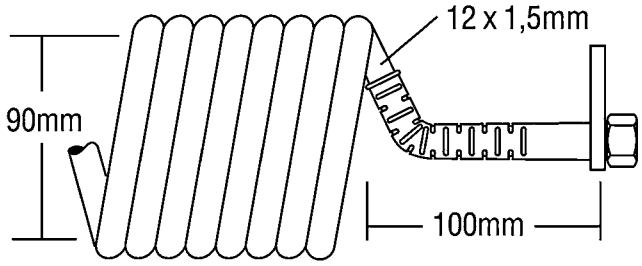

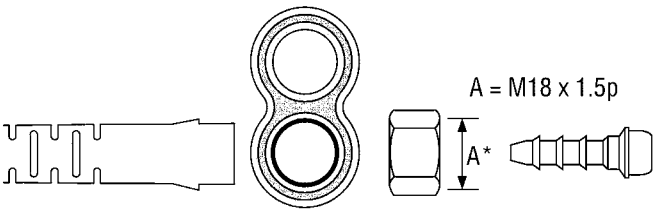

Matching fittings

- 032 0411 09, reducer, M 18 x 1.5 to M 22 x 1.5
- 032 0415 09, bulkhead connector, M 18 x 1.5 to M 22 x 1.5
- 032 0418 09, elbow, M 18 x 1.5 to M 22 x 1.5
- 032 0417 09, elbow, M 18 x 1.5 to M 16 x 1.5
- 032 0513 09, hexagon nut, M 16 x 1.5
- 032 0599 09, seal, M 16 x 1.5

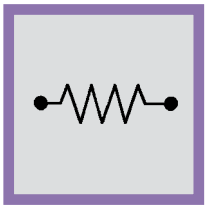

Symbol



AIR TREATMENT

In-line filter	48
Manual drain valve	49
Automatic drain valve	50

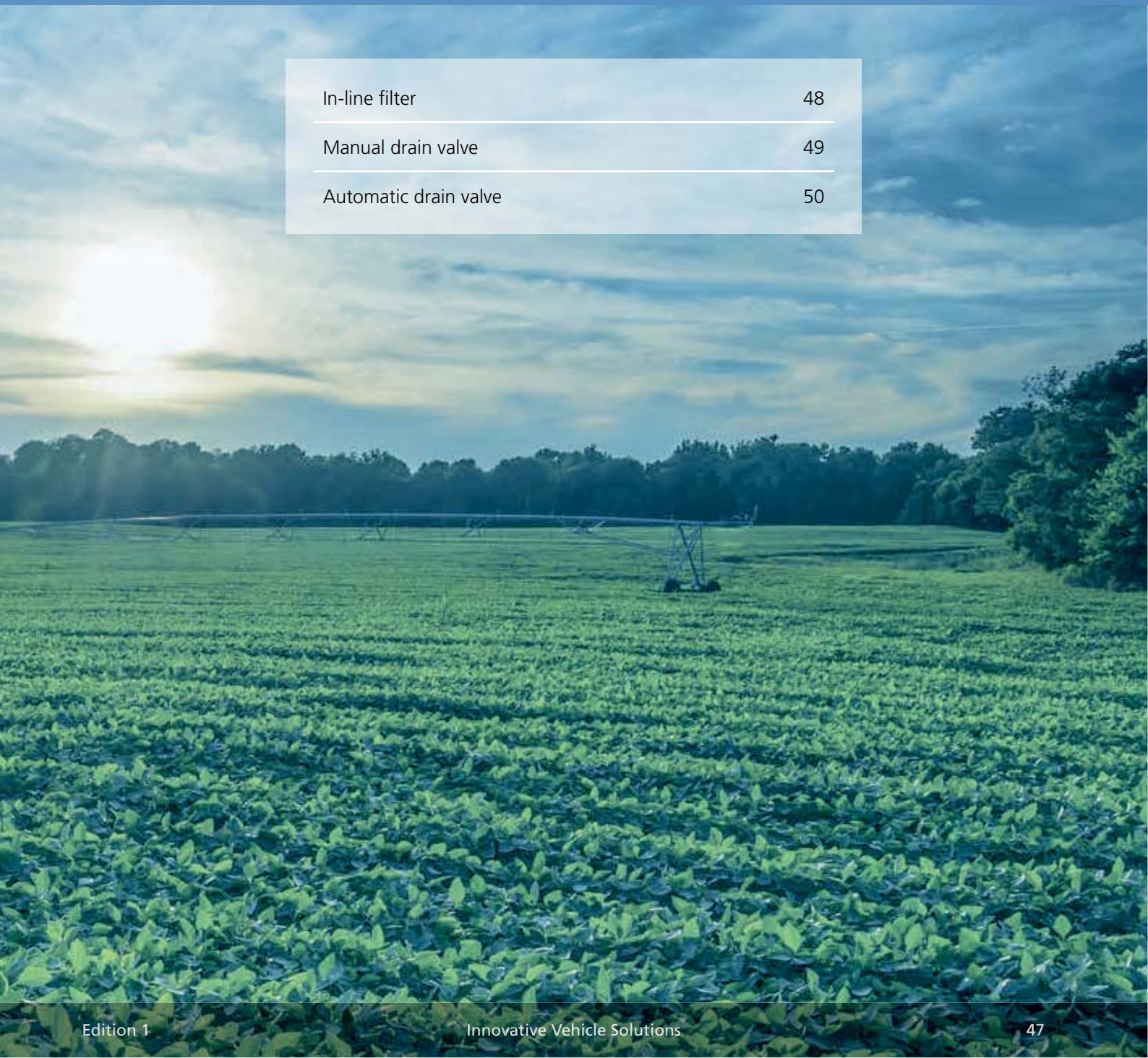

In-line filter

Use

The line filter is installed in air brake systems. It cleans the compressed air, thereby protecting the equipment from faults and defects. The brake system remains operable in both directions, even when the filter element is blocked.

Function

The filter element comprises a plastic sump reinforced by longitudinal ribbing and a sealing seat. Two springs firmly hold the filter element in position. If the filter element is blocked, the filter lifts from its seat and the compressed air flows unfiltered through the line filter.

Installation

The line filter is installed in the pipeline so that the hook-type snap ring faces downwards. Sufficient space for removing the filter insert must be left beneath the line filter. The direction of flow is arbitrary, however, flow from 1 to 2 is preferred.

Maintenance

The filter element should be cleaned at regular maintenance intervals. The element can be removed by pressing in the cover and releasing the hook-type snap ring without it being necessary to remove the filter body from the brake line.

Testing

Check the line filter for blocking and leaks

Technical data

Medium:	Air
Operating pressure:	max. 20 bar
Operating temperature:	-40°C + 80°C
Port description:	1 = Supply 2 = Delivery

Versions

310 005 001: M16x1.5

310 005 011: M22x1.5

Note:

Haldex coupling heads are available with integrated filter



310 005 ...

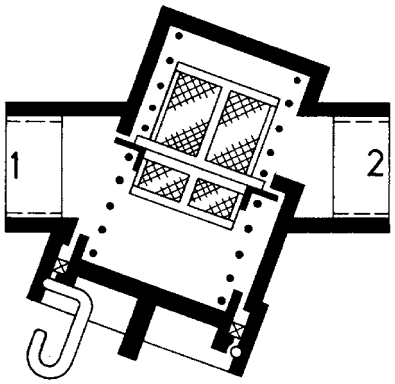

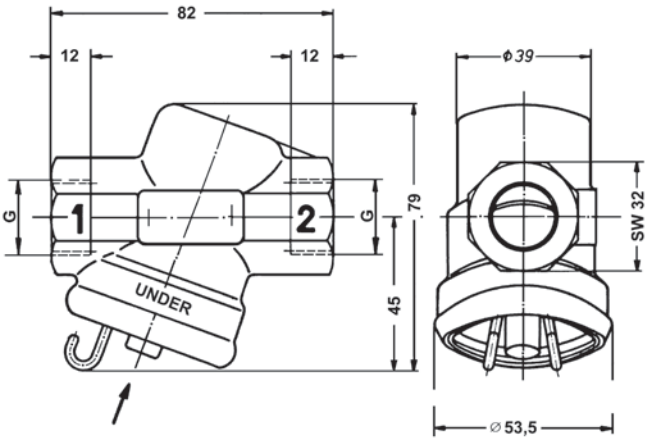

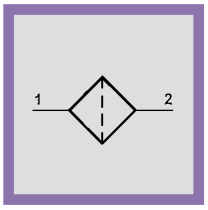

Symbol

Manual drain valve

Use

The drain valve is used for venting and draining the air tank.

Function

In the neutral position, the valve plunger together with the seal is pressed onto the housing seat by the compression spring. By laterally pulling or pushing the valve plunger, the seal is raised from the housing seat allowing the water/moisture to drain off.

Installation

The drain valve is screwed into the lowest connection socket of the air tank.

Care must be taken if a linkage or cable is used for actuating the valve to ensure that, after actuation, the valve plunger once again returns into the neutral position.

Testing

In addition to checking its function, the valve must also be checked for leaks.

Technical data

Operating pressure:	p_e max. 20 bar
Operating temperature:	-46°C to +80°C
Fixing torque:	40 Nm
Thread:	M 22 x 1.5

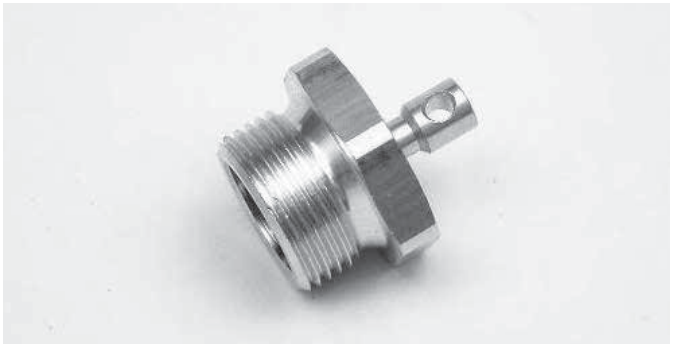

315 019 001

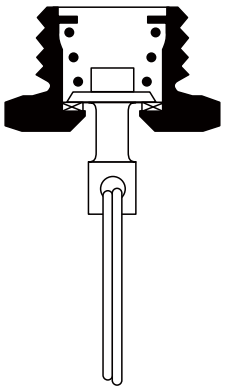

315 019 011

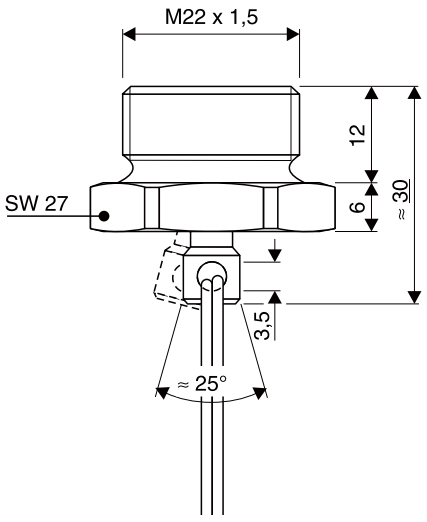

Versions

Part number	Ring	Operating pressure p_e	DIN Description
315 019 001	without	20,0 bar	DIN 74292-B-20
315 019 011	with	20,0 bar	DIN 74292-B-20

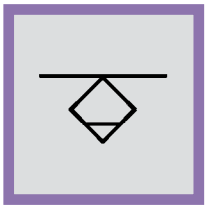

Symbol

Automatic drain valve



315 016 ....

Use

The automatic drain valve automatically drains the water/ moisture collected in the air reservoir.

Function

The diaphragm covers the outlet port. Compressed air and water/ moisture arrive through the filter and in the circular sealing area released by the diaphragm in the pressure chamber underneath the diaphragm. If the operating pressure falls in the air reservoir, then the diaphragm is pressed on the circular sealing area and removed from the outlet port. The water/moisture is expelled through the outlet port.

The outlet port is closed, as soon as the pressure is equalized above and below the diaphragm.

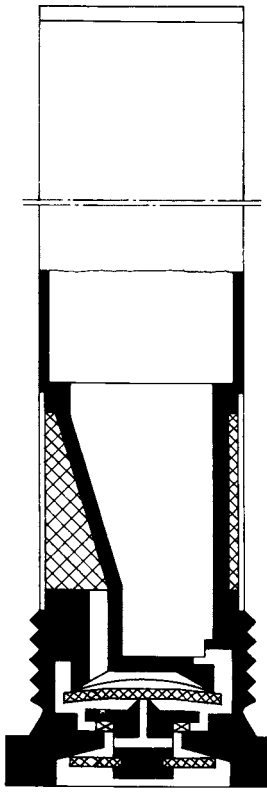

315 016 ...

Installation

The drain valve is screwed into the lowest connection port of the air reservoir M22 X 1.5 using a backing washer & O ring.

Testing

- Examine function and leak-tightness of the drain valve
- Function is to drop pressure to approx. 0.2 - 0.8 bar in the air reservoir. Residual pressure after draining should be checked against the table of types

Technical data

Operating pressure:	max. 20 bar
Operating temperature:	-40°C +80°C
Fixing torque:	40-50 Nm
Water/Moisture output:	ca. 0.5 cm3
Thread:	M 22 x 1.5
Version A	without O-ring 0320601 09
Version B	with O-ring 0320601 09

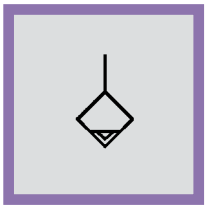

Symbol

Versions

Part number	Version	Operating pressure p_e	Residual pressure
315 016 001	A	8,0 bar	ca. 0,2 bar
315 016 011	A	8,0 bar	ca. 0,8 bar
315 016 021	B	8,0 bar	ca. 0,2 bar
315 031 001		8,0 bar	ca. 0,2 bar

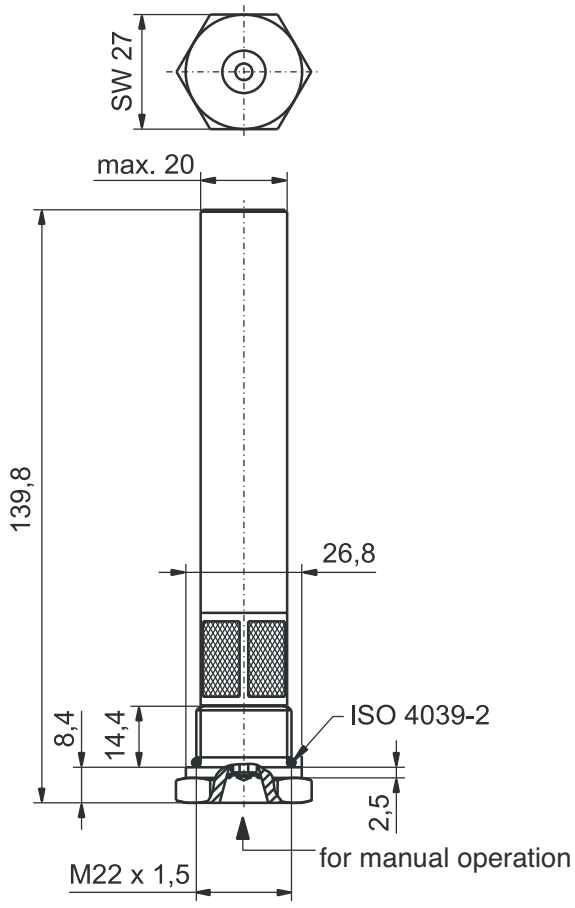

315 031 ...

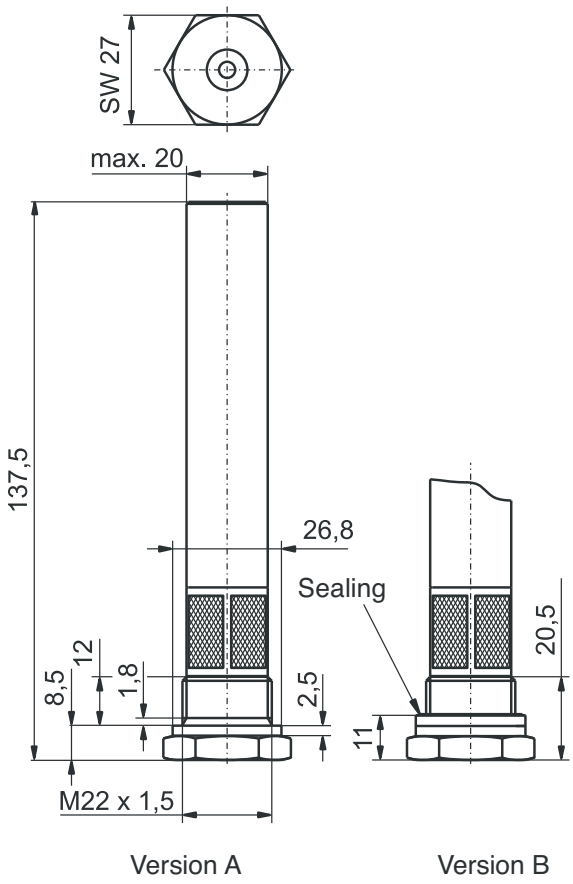

315 016 ...



AIR BRAKE

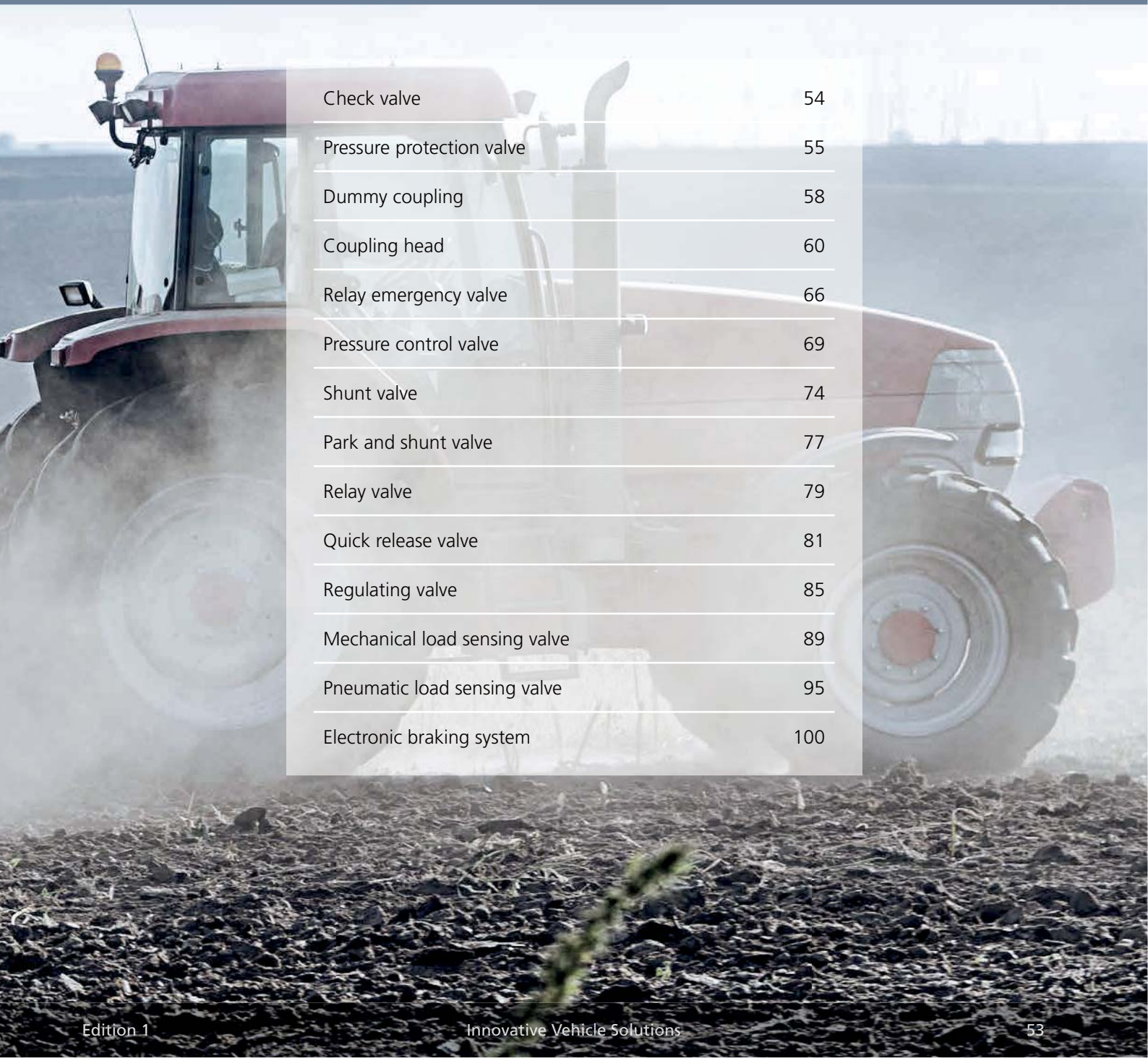

Check valve	54
Pressure protection valve	55
Dummy coupling	58
Coupling head	60
Relay emergency valve	66
Pressure control valve	69
Shunt valve	74
Park and shunt valve	77
Relay valve	79
Quick release valve	81
Regulating valve	85
Mechanical load sensing valve	89
Pneumatic load sensing valve	95
Electronic braking system	100

Check valve

Use

The check valve secures lines in which compressed air is to flow in only one direction, protecting against return flow and a corresponding undesirable drop in pressure.

Function

The compressed air flowing in at connection 1 lifts the check valve from its seat against the force of the spring and flows to port 2.

If the pressure is reduced at port 1, the check valve is pressed against its seat, return flow of the compressed air is no longer possible.

Installation

The valve can be installed in any position while the direction of flow from 1 to 2 must be observed.

Testing

Functional check: when the pressure is reduced at connection 1, there must be no drop in pressure at connection 2.

Technical data

Medium:	Air
Operating pressure:	p_e max. 10 bar
Operating temperature:	-40°C +80°C
Flow cross-section:	45 mm² (according DIN 74280-22)
Port description:	1 = Supply 2 = Delivery

Versions

314 001 001:	M22x1.5



314 001 ....

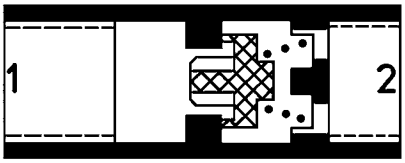

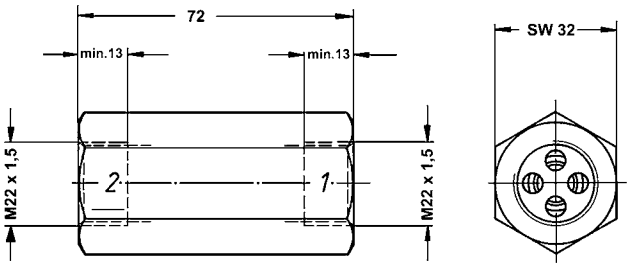

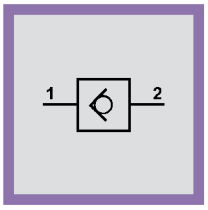

Symbol

Pressure protection valve

Use

Feeding of auxiliary circuits (e.g. air suspension) with air from another circuit. Protection of the different air circuits.

There are 3 types of pressure protection valves:

- Without back flow 314 012 ...(C)
- With back flow 314 013 ...(A)
- With limited back flow 314 014 ...(B)



314 01. ....

Function

Charge position

Air flows through port 1 and pressurizes the underside of the diaphragm. After reaching the adjusted opening pressure, the diaphragm moves off its seat and air flows through port 2 and thus to the auxiliary circuit. On the valve without back flow in addition the before port 2 located check valve is opened.

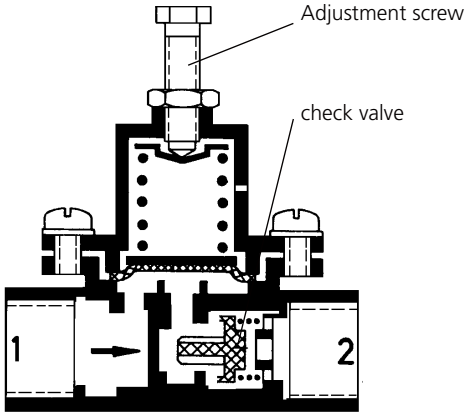

314 012 ...

Protect position

At a relatively large drop in pressure at port 2, e.g. a defect in the auxiliary circuit, air from port 1 flows into port 2, until the spring presses the diaphragm onto its sealing seat. In port 1 the protected pressure remains.

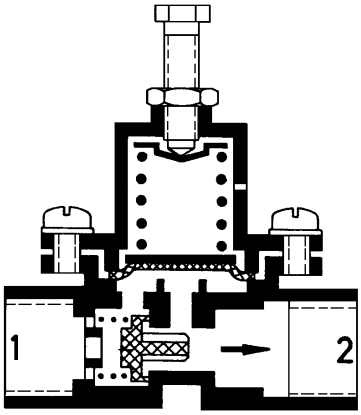

314 013 ...

Back flow position

In the back flow position in port 2, the pressure indicated in the index remains.

1. Valve without back flow C
   A drop in pressure at port 1 the check valve closes resulting in no back flow from 2 to 1.
2. Valve with back flow A
   A drop in pressure at port 1 the check valve opens, whereby air from port 2 can flow to port 1.
3. Valve with limited back flow B
   A drop in pressure at port 1, air flows from 2 to 1, until the power of the spring over comes the pressure beneath the diaphragm, sealing the protected pressure in port 2.
   If a defect occurs in port 2 (ventilation to 0 bar) protected pressure must remain in port 1 (on all versions).

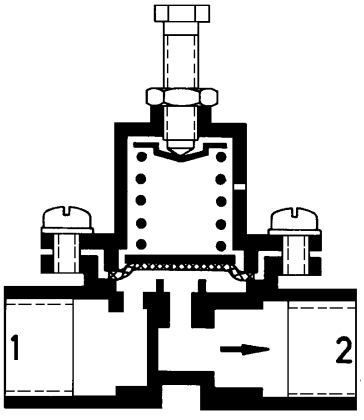

314 014 ...

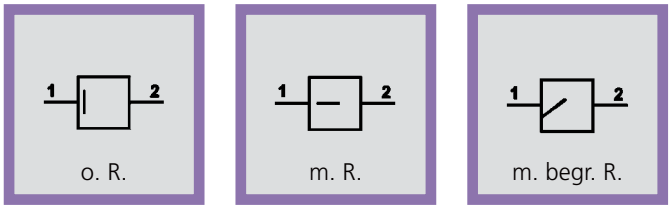

Symbols

Installation

The pressure protection valve is normally installed directly into the vehicle reservoir using an M22 bulkhead connector (vehicle piping diagram required before installation). The air flow direction from 1 to 2 (see arrow on valve) must be observed.

Port 1	IN from reservoir
Port 2	OUT to auxiliary

Testing

- Check for correct function and air leaks
- Check opening and closing pressures with test gauges. In the port 1 and/or 2 the pressures must be in according to the index versions and data of the vehicle manufacturer
- Leak-tightness check

Technical data

Medium:	Air
Operating pressure:	maximum 20 bar
Operating temperature:	- 40°C + 80°C
Ports:	M 22 x 1.5
Port description:	1 = inlet port 2 = delivery port

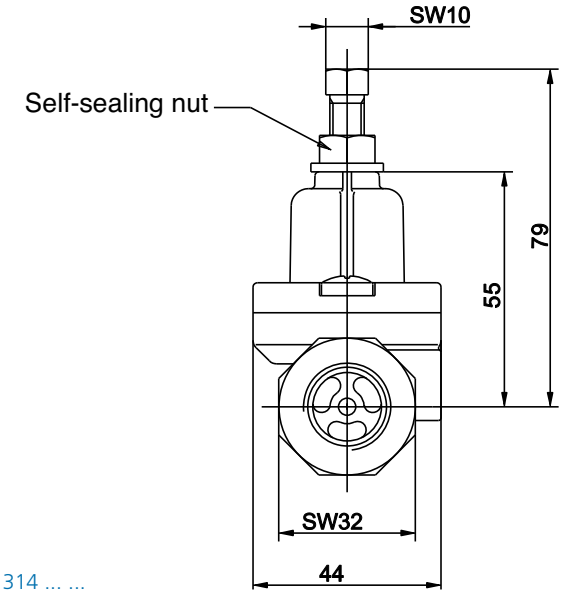

314 ... ...

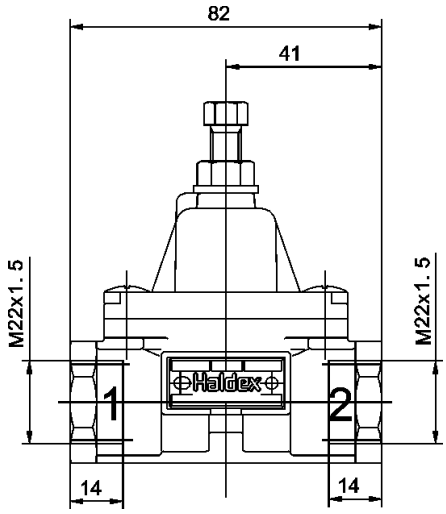

314 ... ...

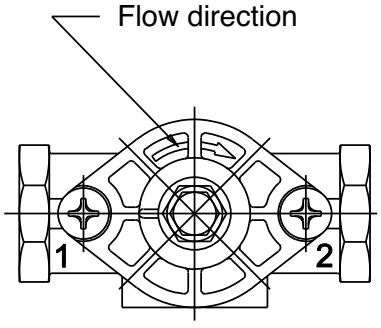

Versions

Without backflow

Part number	Description to DIN	Opening pressure in p_e ... bar
314 012 001	C4,5 DIN 74279	4,5 - 0,3
314 012 002	C5,0 DIN 74279	5,0 - 0,3
314 012 003	C5,5 DIN 74279	5,5 - 0,4
314 012 004	C6,0 DIN 74279	6,0 - 0,4
314 012 005	C6,5 DIN 74279	6,5 - 0,4
314 012 104*	C6,0 DIN 74279	6,2 - 0,2

With backflow

Part number	Description to DIN	Opening pressure in p_e ... bar
314 013 001	A 4,5 DIN 74279	4,5 - 0,3
314 013 002	A 6,0 DIN 74279	6,0 - 0,4
314 013 003	A 5,5 DIN 74279	5,5 - 0,4
314 013 005	A 6,5 DIN 74279	6,5 - 0,4
314 013 006	A 3,5 DIN 74279	3,5 - 0,3
314 013 008	A 7,3 DIN 74279	7,3 - 0,4
314 013 023	A 8,3 DIN 74279	8,3 - 0,4
314 013 012**	A 0,8 DIN 74279	0,8 - 0,3
314 110 001	A 4,5 - 22	4,5 - 0,3

With limited backflow

Part number	Description to DIN	Opening pressure in p_e ... bar	Closing pressure in p_e ... bar
314 014 001	B 4,5 DIN 74279	4,5 - 0,3	3.5
314 014 002	B 6,0 DIN 74279	6,0 - 0,4	5
314 014 003	B 6,2 DIN 74279	6,2 - 0,4	5,7 ± 0,2
314 014 005	B 5,5 DIN 74279	5,5 - 0,4	
314 014 008	B 7,3 DIN 74279	7,3 - 0,4	
314 014 012	B 0,5 DIN 74279	0,5 + 0,2	0,8 - 0,2
314 014 013	B 8,5 DIN 74279	8,5 - 0,3	

* = Mainly to protect air suspension system.
** = For protection pressure in lift bag. Port 1 mounted in direction to lift bag.

Dummy coupling



334 028 001

Use

The dummy coupling is used for locking and retaining the coupling heads on tractors and semi trailers so that the flexible coupling lines can be correctly held in position when the coupling head is uncoupled. In this way, the lines are protected against damage and dirt is prevented from entering the brake system.

Function

The coupling heads are turned until they are engaged in the retainer of the dummy couplings.

Installation

In the case of semi -trailer tractors, the dummy coupling is installed on the rear wall of the driver's cab, on centre axle trailers and full draw bar trailers a suitable position on the front wall of the trailers must be found and the dummy couplings mounted in such a way as to ensure that the connected air lines cannot become loose.

Maintenance

The support surface for the sealing ring of the coupling head must be cleaned. Care must be taken to ensure that the vent hole is not blocked. Check the mounting of the dummy coupling, ensure the sealing surfaces and the vent hole are clean.

Technical data

Operating pressure:	-46°C +80°C

Versions

334 028 001 for coupling heads w/o automatic shut off.
334 066 001 for coupling heads with automatic shut off.

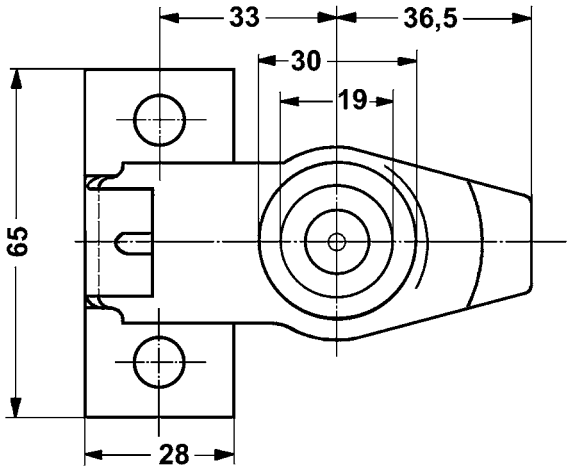

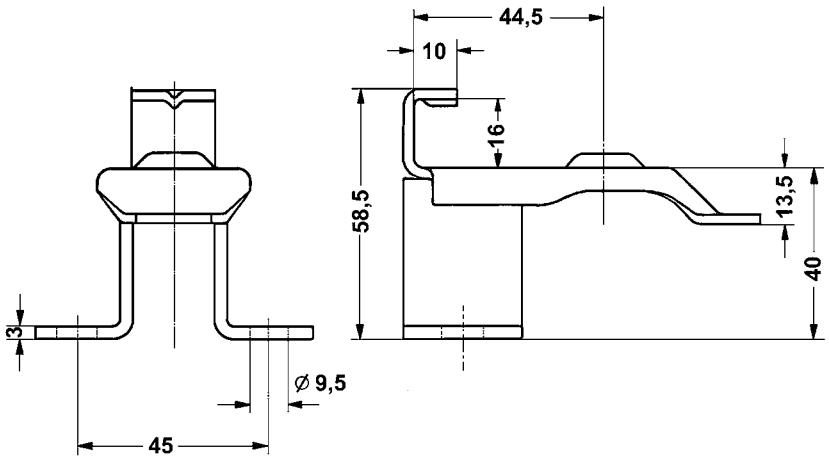

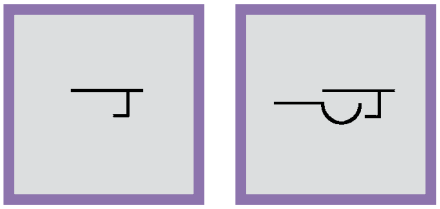

Symbols



334 066 001

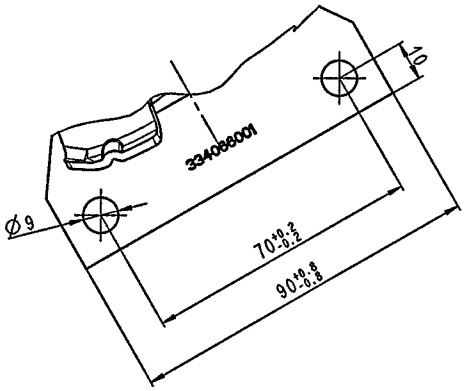
10
334066001
Ø9
70
90

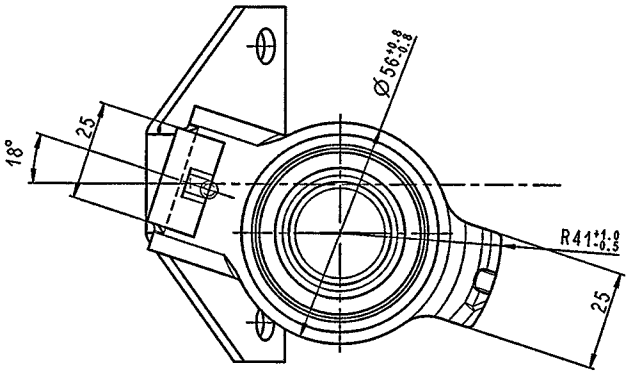
Ø56
18°
25
R41
25

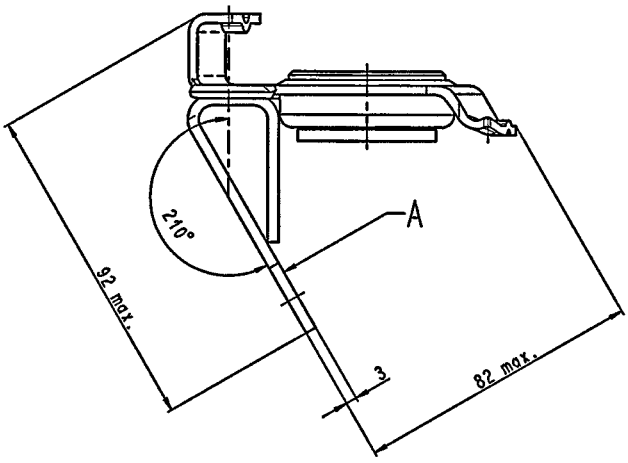
210°
A
92 max.
3
82 max.

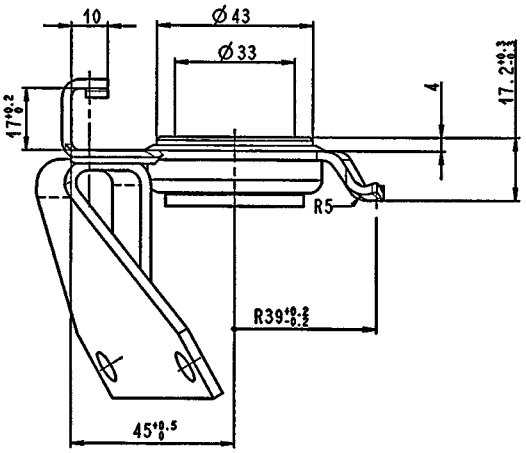
10
Ø43
Ø33
4
R5
R39
45

Coupling head

Use

The coupling head with valve is used in the tractor unit, and the coupling head with pin in the trailer, to connect the control lines in single-line air braking systems.

Function

When connecting the coupling heads of trucks or tractors and trailers, the pin pushes the valve downwards and the valve seal is opened. The sealing rings are pressed against each other and seal off the coupling connection.

After the shut-off cock is opened, compressed air flows from the tractor unit air tank through the connected coupling heads into the air tank of the trailer. The shut-off cock must be shut off before uncoupling.

After uncoupling, the cover must be closed or the coupling head connected to the dummy coupling provided so as to prevent ingress of dirt.

If the tractor unit breaks away and the coupling heads disconnect, the spring presses the valve on to the valve seat and closes the passage. The control line exhausts completely through the coupling head in the trailer, and the relay emergency valve initiates emergency braking of the trailer.

Installation

The coupling head with valve must be mounted at the rear of the truck or tractor unit. The coupling head must be fitted to the right of the trailer coupling, looking in the direction of travel. The coupling face must point to the left. The coupling head

must be positioned so that coupling poses no difficulty. The coupling head with pin must be mounted on the brake hose on the trailer. The coupling face must point to the right. If the trailer breaks away, the hose coupling must disconnect automatically.

Note:

Single-line operation is only permitted by StvZo up to a maximum of 25 km/h.





334 0.. ...

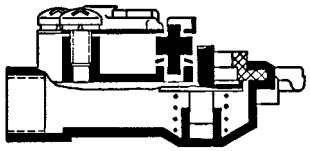

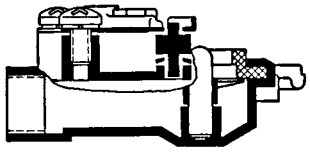



334 007 ...

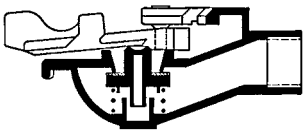

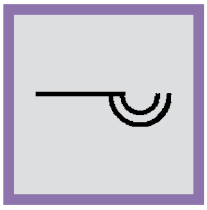

Symbol

Maintenance

Replace damaged sealing rings.

Testing

Check that the coupling head latches into place and does not leak.

Technical data

Service pressure:	see the table of versions
Service temperature:	-40°C to +80°C

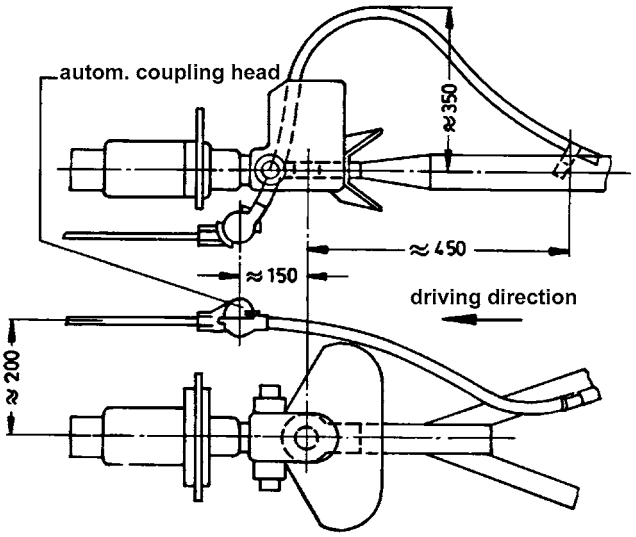

Versions

Part number	Colour	1-Line	Port	Operating pressure	Note
334 004 001	Black	Emergency/service	M 22 x 1,5	8,0 bar	automatic shut, plastic cover
334 007 001	Black	Emergency/service	M 22 x 1,5	8,0 bar	with pin, plastic cover
334 082 001	Black	Emergency/service	M 22 x 1,5	10,0 bar	automatic shut, plastic cover

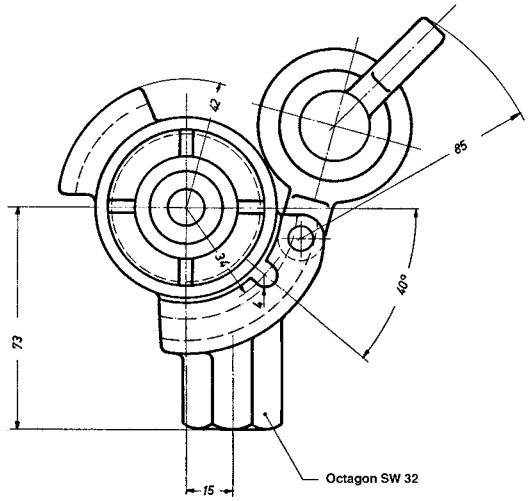

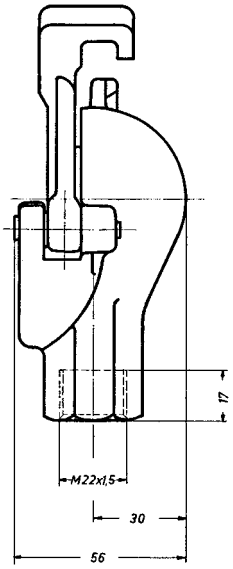

334 004

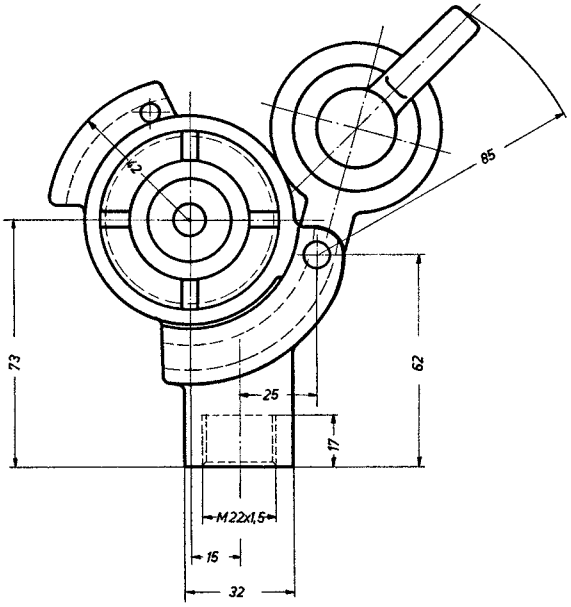

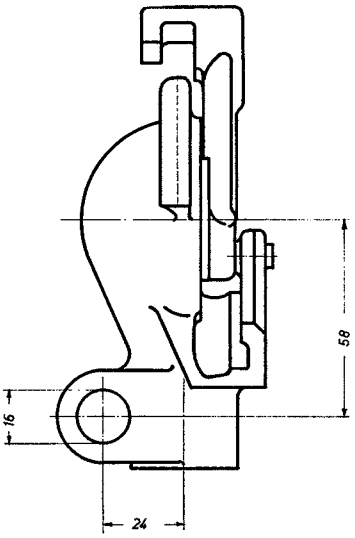

334 007

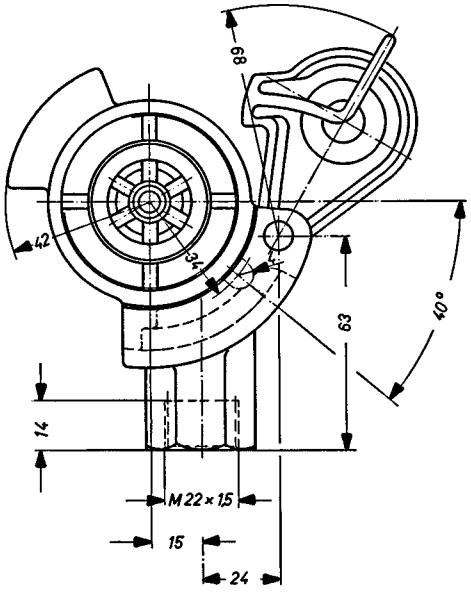

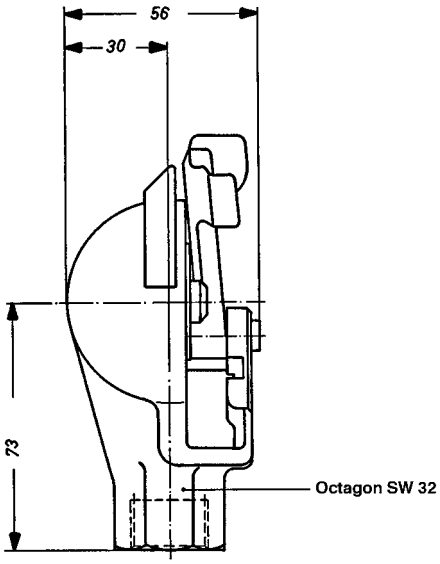

334 043

Use

The coupling heads are installed in dual-line air brake systems for connecting the supply and brake lines of the towing vehicle to the trailor. The coupling heads comply with ECE/EC regulations and ISO specifications R 1728. They can be coupled with coupling heads corresponding to the standard SAE J 318 or VG 74342. The coupling heads are installed only on towing vehicles.

The coupling heads must be installed in accordance with the ISO standard 1728.



334 08. ...

Function

Stop lugs which prevent the coupling head "supply" (red cover) being coupled with the coupling head "brake" (yellow cover) are provided on the housing of the coupling heads. When coupling together, the sealing ring of the mating coupling head presses the pressure piece downwards on to the rocker valve. The through passage at the sealing seat is opened and the compressed air flows through the coupled connection.

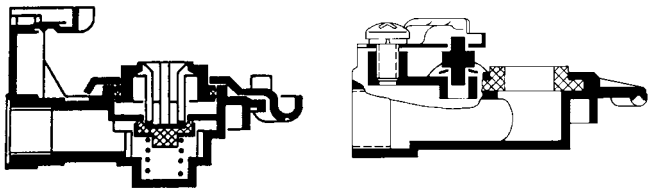

Installation

The coupling head for the supply line is installed on the towing vehicle on the right-hand side as viewed in the direction of driving and the coupling head for the brake line to the left. The coupling surfaces must point to the right, coupling must take place without difficulties.

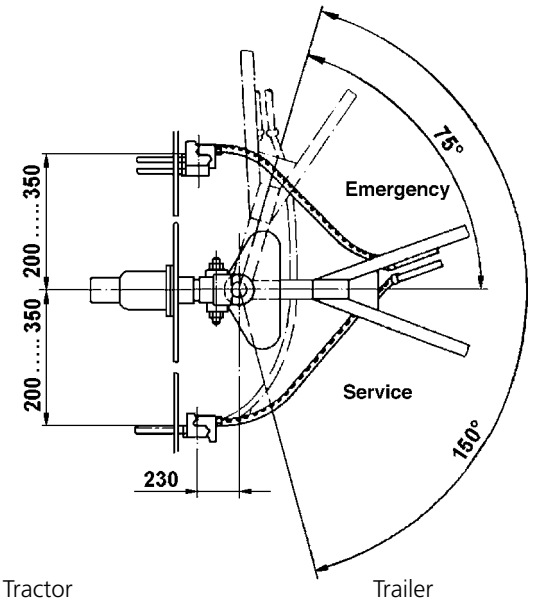

Tractor Trailer

Maintenance

After uncoupling, the cover must be closed in order to prevent dirt from entering. Damaged sealing rings must be renewed. The coupling heads must be maintained as part of the legal regulations.

Testing

- Check whether the coupling head engages correctly
- Ensure it does not leak
- Check sealing rings for damage

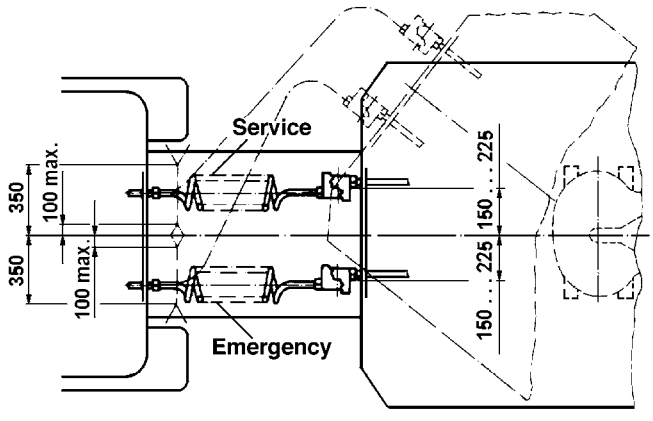

Tractor Trailer

Technical data

Medium:	Air
Operating pressure:	see table versions
Operating temperature:	-40°C to +80°C

Truck

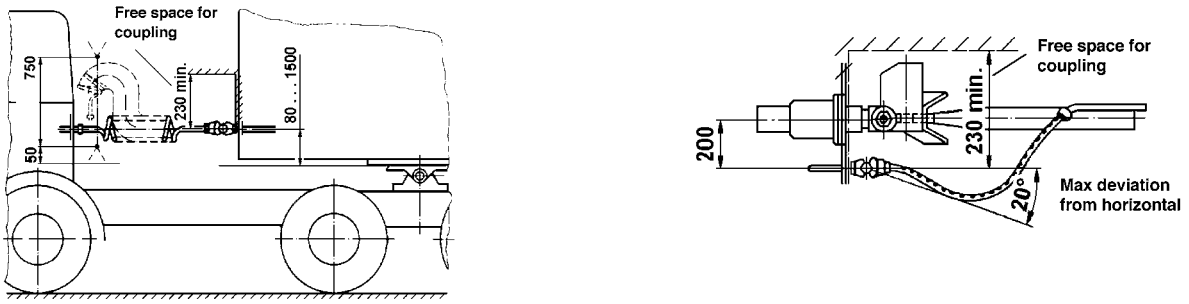

334 086 101

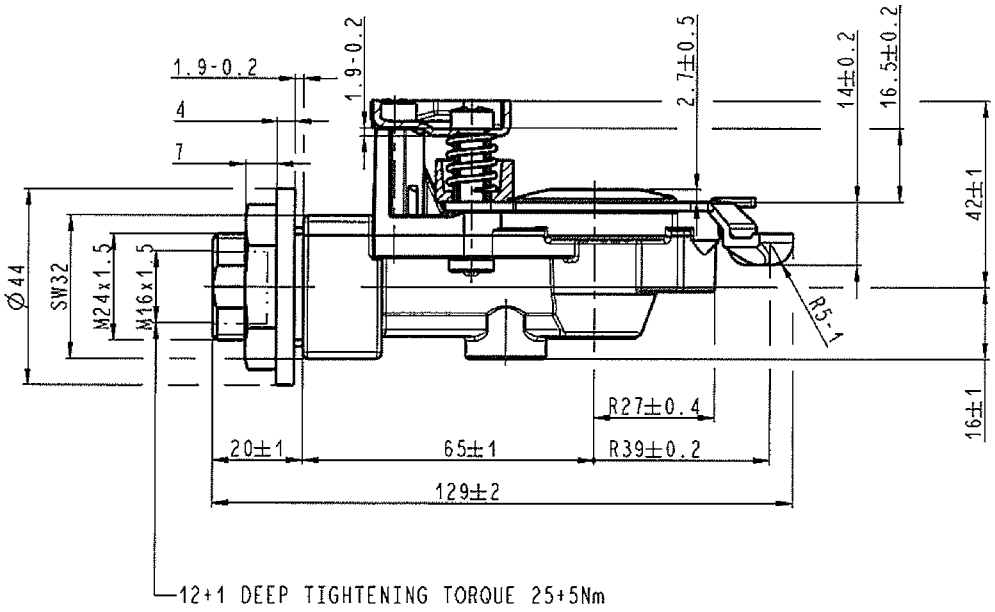

334 085 111

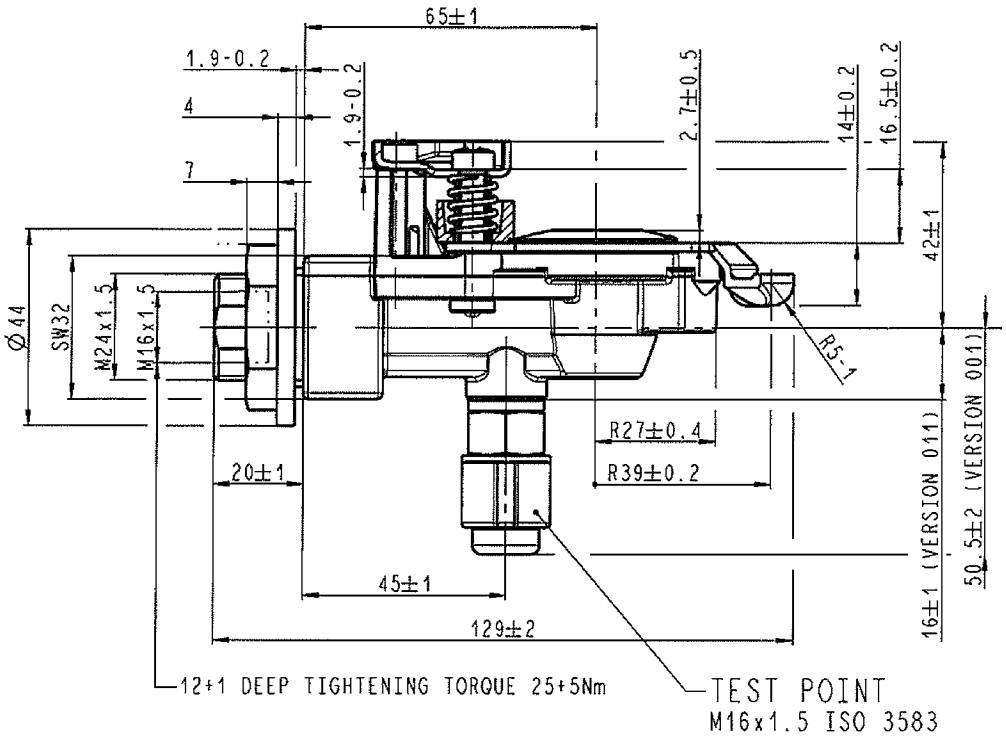

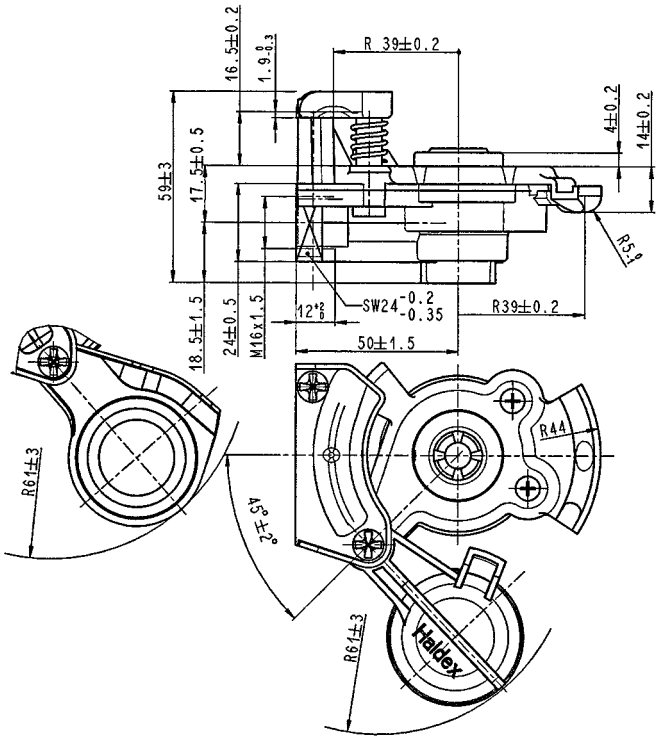

334 071 001

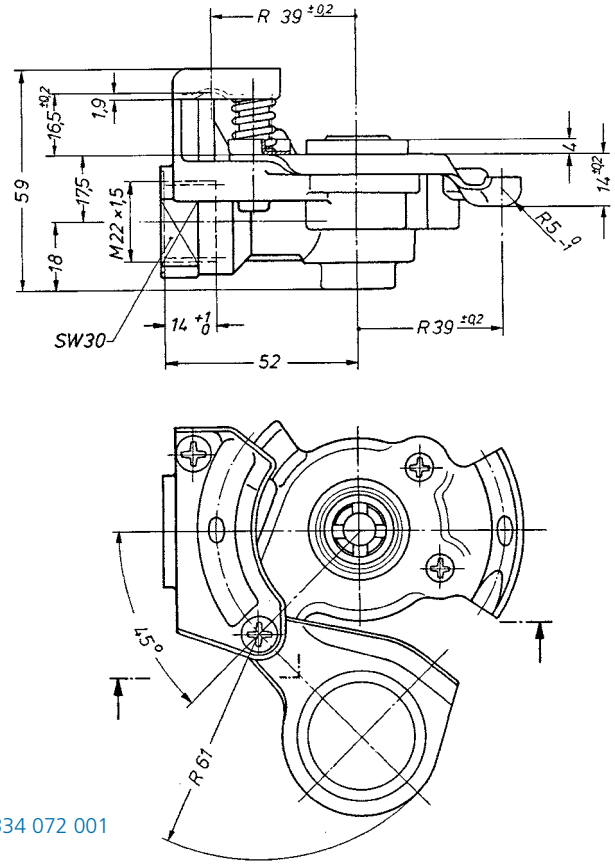

334 072 001

Versions

Part number	Colour	Line	Port	Operating pressure	Note	Nut and disc
334 085 111	Yellow	Service	M 16 x 1,5	10,0 bar	with filter, plastic cover	with
334 085 101	Yellow	Service	M 16 x 1,5	10,0 bar	with filter + test point, plastic cover	with
334 086 101	Red	Emergency	M 16 x 1,5	10,0 bar	with filter, plastic cover	with
334 063 001	Red	Emergency	M 16 x 1,5	10,0 bar	automatic shut, metal cover	without
334 063 011	Red	Emergency	M 16 x 1,5	10,0 bar	automatic shut, plastic cover	without
334 064 001	Yellow	Service	M 16 x 1,5	10,0 bar	automatic shut, metal cover	without
334 064 011	Yellow	Service	M 16 x 1,5	10,0 bar	automatic shut, plastic cover	without
334 071 001	Red	Emergency	M 22 x 1,5	10,0 bar	automatic shut, metal cover	without
334 072 001	Yellow	Service	M 22 x 1,5	10,0 bar	automatic shut, metal cover	without

Relay emergency valve

Use

The R.E.V. controls the dual-circuit air brake system of the trailer. The valve complies with the requirements of EC regulations regarding brake systems. Versions with a predominance device can adapt the braking effect between the towing and towed vehicle.

Function

As long as there is a pressure difference between ports 1 and 2-1, the supply air flows through power inlet 1 past the overflow seal to port 2-1 and from here to the air tank of the trailer. At the same time, the supply air passes through the hole in the valve spindle and is applied in the chamber between the control piston and valve spindle piston. When released, the inlet is closed and the outlet opened. Air is allowed to escape from ports 2 via the opened outlet. Air is allowed to escape from the control port 4 via the actuation valve (trailer control valve). If the vehicle brake system is actuated, pressure is applied to port 4 of the emergency relay valve via the brake line. The control piston moves downwards together with the valve spindle. The outlet is closed and the inlet opened. The compressed air flows from port 2-1 to the ports 2 and from here into the brake chamber of the trailer. The pressure in ports 2 is also applied to the control piston from below. The inlet closes and the outlet remains closed when the pressure forces acting on the control piston have equalized. This provides a partial braking position. Any change in pressure at port 4 results in a corresponding change in pressure at the ports 2.

In the full braking position, the piston spindle moves downwards to such an extent that the outlet remains closed and the inlet fully opened.

Air is allowed to escape from port 1 out to atmosphere by uncoupling the coupling head "emergency" or by disconnecting the supply line.

Since air is also allowed to escape from the chamber between the control piston and the valve spindle piston, the spring forces the valve spindle downwards, the outlet is closed and the inlet opened. The full pressure from port 2-1 is directed to the ports 2.

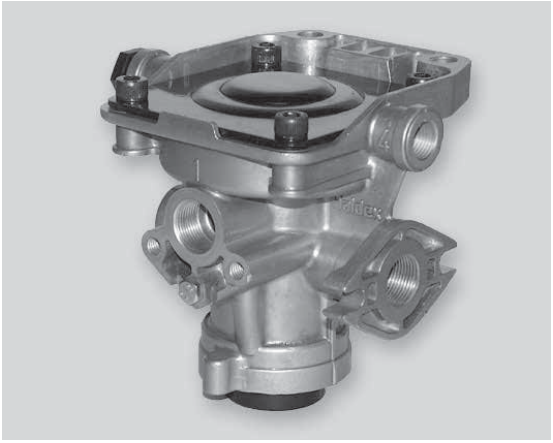

351 008 ...

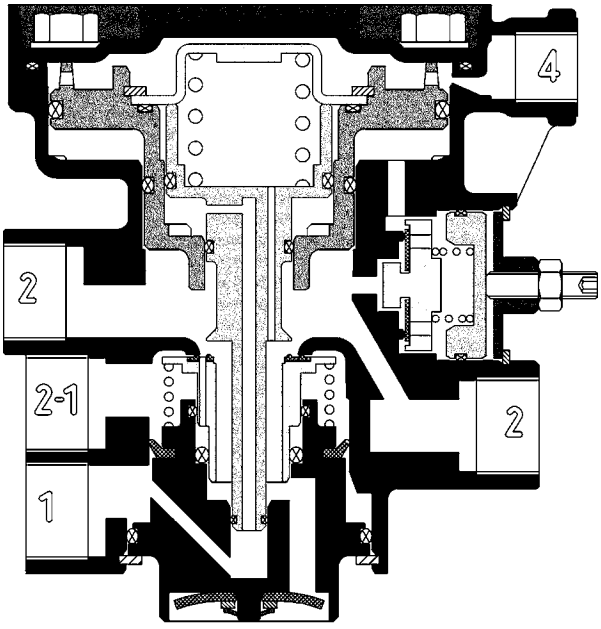

351 008 ...release position

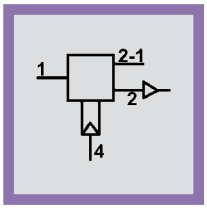

Symbol

Predominance device

Emergency relay valves with a predominance device can be set in such a way that the pressure at the ports 2 is increased with respect to port 4 in the partial braking range from p_e = 0... 1.5 bars.

Depending on the set spring force on the predominance device, the compressed air in the ports 2 is directed via a hole under the entire surface beneath the control piston after an increased pressure in ports 2 has been reached and after the valve plate of the predominance device has been raised. Only now can the final position, i.e. closed inlet and outlet be obtained.

If the trailer vehicle is to be manoeuvred in an uncoupled condition, then the automatic release valve (if fitted) flange-mounted on the R.E.V. must be actuated.

The port is opened between port 2-1 and the valve spindle piston by depressing the pushbutton in the release valve. Compressed air flows from the air tank under the valve spindle piston and presses it upwards against the force of the spring. As a result, the inlet is closed, the outlet opened and air is allowed to escape from the wheel brake cylinders via the vent. A so-called "safety pressure" has been reached if the pressure in the air tank is no longer adequate to force the valve spindle piston upwards against the force of the spring. The brake can now no longer be released with the release valve. The trailer vehicle must once again receive a supply of compressed air by connecting the red supply line, only now can the trailer brake be released once again using the release valve.

The release valve automatically returns to the operating position when the red supply line is connected. The brake can now be applied in the trailer vehicle.

The relay emergency valve combined with the automatic release valve is mainly used on trailers with brake systems equipped with automatic load sensing valves.

The emergency combination relay valve with manual load valve does not comply with EC requirement. An automatic release valve is not required if this manual load valve is equipped with a release setting.

Functional diagrams

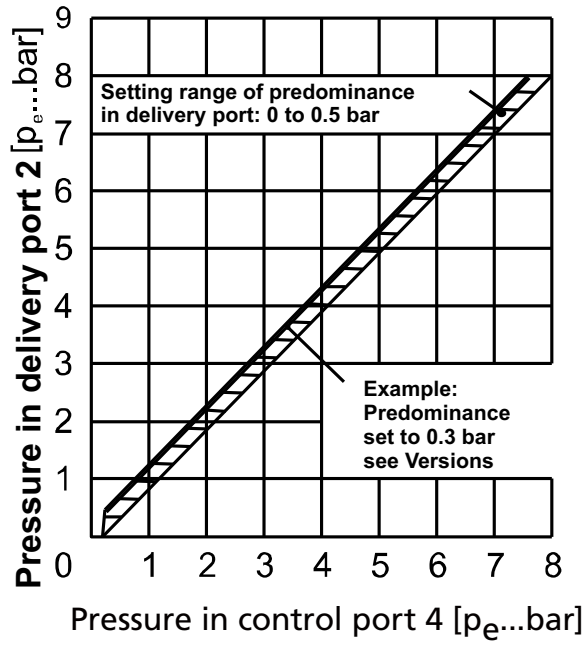

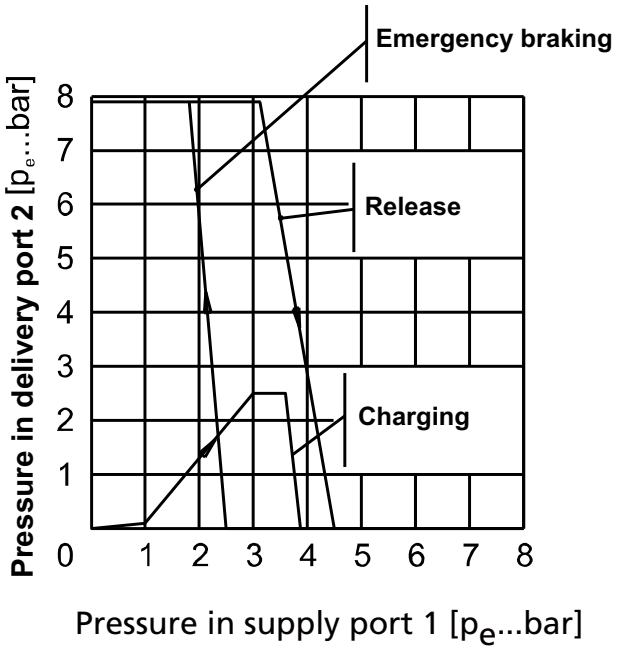

Installation

The relay emergency valve should be installed with the vent facing downwards and with its mounting flange secured by two bolts on the vehicle frame. The automatic release valve, Part No. 352 012 001 is flange-mounted onto the relay emergency valve by means of two socket head cap screws M 8 x 20, Part No. 051 0109 09. An O-ring, Part No. 024 0331 09 and a sealing ring, Par No. 025 0021 09 must be used for sealing the flange port (refer to types for part numbers of combinations).

Care must be taken in the case of combined versions to ensure that the actuation devices are easily accessible.

Maintenance

The relay emergency valve, together with its combinations, must be maintained as part of legal regulations.

Testing

Ensure the function of the relay emergency valve meets the corresponding functional diagrams.

The functionality of the automatic release valve must also be checked, in addition to the above check for leaks. With the vehicle stationary, and the brake system ready for operation, the supply line to the trailer vehicle is uncoupled. The piston rods of the brake chambers on the trailer must extend quickly. The brake must be released when the push button of the automatic release valve is depressed against the stop.

The push button must return to its initial position when it is in the position for manoeuvring and air is once again allowed to enter the supply line of the trailer.

In order to check the predominance device, apply p_e 4 = 3.5 bar at port 4 and measure the modulated pressure p_e 2 at outlet port 2. In order to adjust the predominance, allow air to escape at port 4 to atmosphere. Using a 10 mm open-ended spanner, loosen the locknut on the adjusting screw of the predominance device and turn the adjusting screw with an 8 mm open-ended spanner.

Turning in clockwise direction = Increasing the predominance setting

Turning counter clockwise = decreasing the predominance setting

Note the specifications of the vehicle or brake manufacturer when adjusting the predominance.

Technical data

Operating pressure:	p_e = 10 bar
Operating temperature:	- 40°C - + 80°C
Medium:	Air
Ports:	1, 4: M 16 x 1.5 1-2, 2: M 22 x 1.5
Port description:	1 = Supply 2 = Delivery 4 = Control 2-1 = Delivery/Supply

Versions

Part number	Version	Flange for shunt valve	Predominance set (bar)	Availability
351 008 111	A	yes	0,5	on request
351 008 112	A	yes	0	on request
351 008 113	A	yes	0,2	on request
351 008 121	B	yes, but closed	0,5	on request
351 008 122	B	yes, but closed	0	yes
351 008 123	B	yes, but closed	0,2	on request
351 008 124	B	yes, but closed	0,3	on request
351 009 121	B	yes, but closed	without	yes
351 033 001	for EB+	no	without	yes
351 022 001		yes	0,2	yes

Combinations

Part number	Relay emergency valve	Shunt valve	Manual load sensing valve	Availability
350 026 102	351 008 122	352 012 001		yes
350 027 202	351 008 122		352 011 102	yes
350 028 101	351 008 122	352 012 001	352 011 122	yes

Pressure limiting valve

Use

The pressure limiting valve limits the pressure in the brake chambers of the trailer depending on the load status.

Function

The lever of the pressure limiting valve must be set manually, corresponding to the load status of the trailer. Depending on the type, the settings "no-load", "half load", "full load", and in some cases "1/4 load", "3/4 load" and "release" are provided.

When the service brake system of the trailer is actuated, the compressed air from the relay emergency valve flows into inlet port 1 of the pressure limiting valve and then through the open outlet port 2 and onto the brake chambers.

At the same time, the pressure in outlet port 2 is also applied via a hole to the control piston. When a pressure corresponding to the lever setting has been reached in the brake cylinders, the control piston is shifted downwards against the force of the spring until both inlets close. The outlet remains closed. Further increase of pressure in the brake cylinders is not possible. A drop in pressure in outlet port 2 (e.g. as a result of a leak between the pressure limiting valve and brake cylinder) is immediately compensated by the control piston moving upwards and opening the upper inlet.

The spring under the control piston is preloaded corresponding to the lever position by means of the cam arranged on the lever shaft. In the lever position "full load", the control piston is prevented from moving downwards so that the inlet remains open and during full braking, the brake cylinders receive the full operating pressure.

The lever must be moved into the position "release" (if provided) in order to manoeuvre the uncoupled trailer vehicle with the brakes applied. In this way, the spring under the control piston is completely relieved, the inlet closed, the outlet opened and the compressed air escapes from the brake cylinders into the atmosphere via the vent holes in the protective cap.

In the case of versions without the "release" setting, a release valve flange-mounted on the relay emergency valve must be actuated for releasing the brake system for manoeuvring purposes

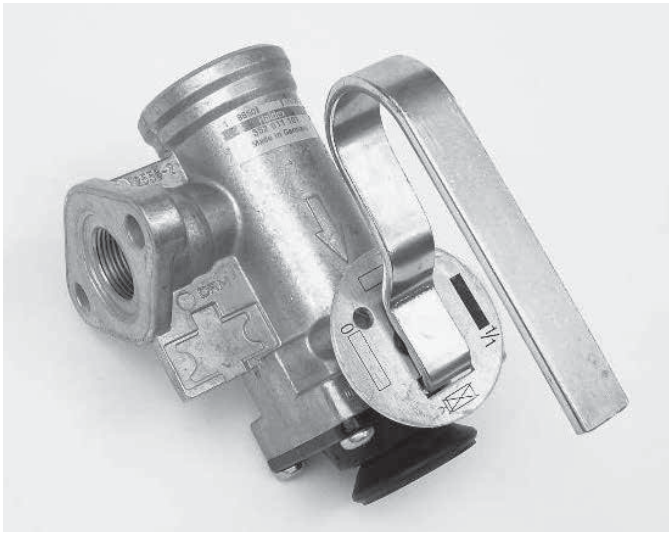

352 011 ...

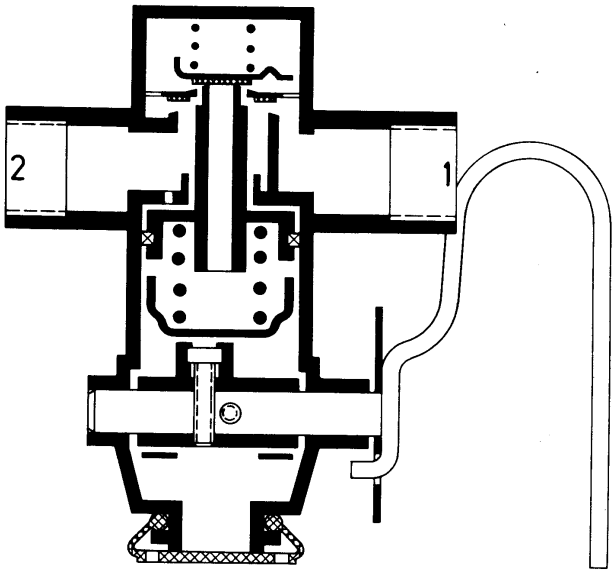

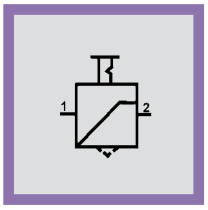

Symbol

Installation

The pressure limiting valve can be installed either directly flanged on the relay emergency valve (using a sealing ring Part No, 025 0021 09) or installed in the line between the relay emergency valve and brake cylinder.

Care must be taken to ensure the lever is adequately accessible. The vent must face downwards.

It is recommended to install a pressure limiting valve for each axle or axle pair if the front and rear axle(s) of the trailer are subjected to different loads during operation. Each pressure limiting valve then limits the brake pressure in the corresponding axle independently of the other. The allocation of the pressure limiting valve should be indicated by means of an information plate.

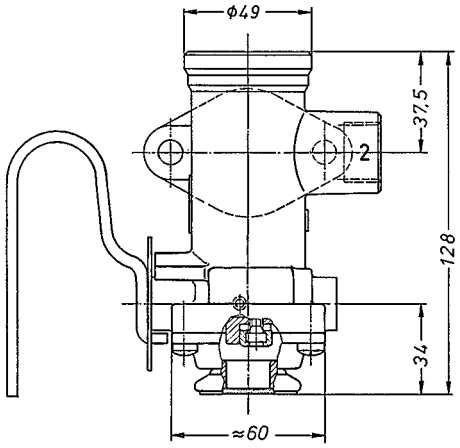

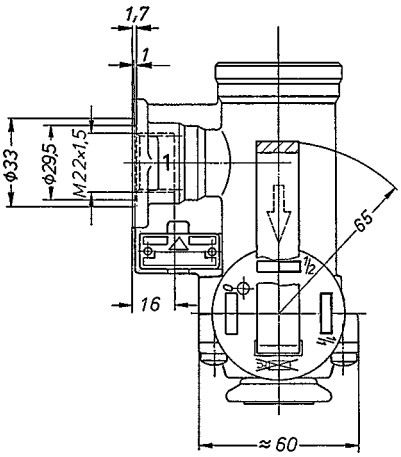

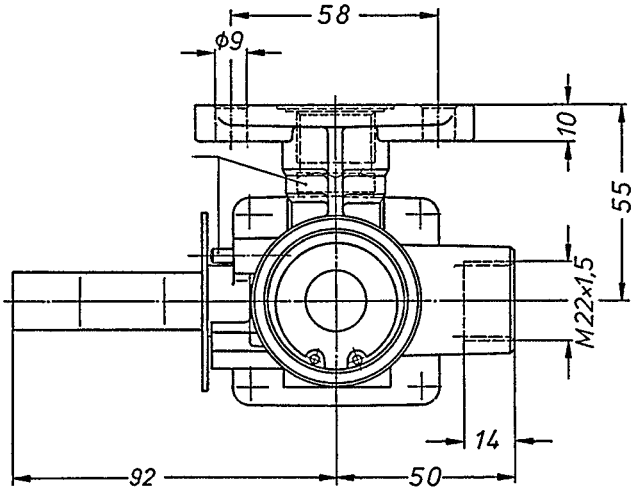

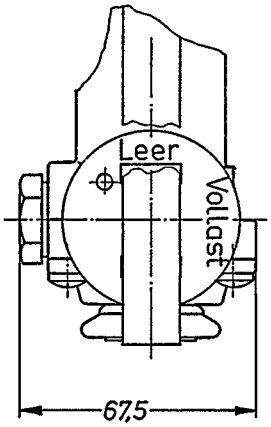

Maintenance

The pressure limiting valve must be maintained as part of the legal regulations. Renew damaged dust caps. Pressure setting of manual load valve. Depending on the version, the pressure setting of the pressure limiting valve can be adjusted for the settings "no load", "1/4 load" or "1/2 load" by turning the adjusting screws. It is not possible to adjust the pressure for the "full load" setting. A screwdriver DIN 911-4 (key for socket head cap screws 4 mm) is required for adjustment work. The lever position for adjusting the pressure in "no load", "1/2 load", "1/4 load" and "3/4 load" setting is specified in the following.

Turning the adjusting screw in a clockwise direction = pressure reduction
Turning the adjusting screw in a counter clockwise direction = pressure increase
The pressure value to be adjusted depends on the specifications of the vehicle manufacturer.

Testing

Check pressure setting in the individual lever positions (note specifications of vehicle manufacturer). For reference values, refer to types or information on carrying out special brake inspections. Check release position (if available). The brakes must be free in the "release" position. Check dust cap.

Technical data

Operating pressure:	up to 10 bar
Operating temperature:	-40°C to +80°C
Ports:	M 22 x 1.5
Port description:	1 = Supply 2 = Delivery

Versions

Part number	Brake system	Operating pressure p_e in bar	Release	Empty	1/4	1/2	3/4	Load	Empty	1/4	1/2
			Setting at position (p_e in bar)						Possible pressure settings (p_e in bar)		
352 011 101	Single line	5,3	with	1,5 - 1,9	-	3,0 - 3,5	-	Tank pressure	1,0 - 2,0	-	3,0 - 4,5
352 011 102	Dual line	7,35	with	2,0 - 2,5	-	4,0 - 4,5	-	Tank pressure	1,3 - 2,5	-	3,0 - 4,5
352 011 121	Single line	5,3	without	1,5 - 1,9	-	3,0 - 3,5	-	Tank pressure	1,0 - 2,0	-	3,0 - 4,5
352 011 122	Dual line	7,35	without	2,0 - 2,5	-	4,0 - 4,5	-	Tank pressure	1,3 - 2,5		3,0 - 4,5

Use

In compressed air systems to limit the output pressure, but also for changed but increased input pressure.

Function

The compressed air entering at port 1 flows over the open valve seat to port 2, where it also acts on the spring-loaded diaphragm.

If the set spring force is reached by the compressed air acting on the diaphragm, the valve inlet closes so that no more compressed air can flow to port 2. Pressure losses due to leaks on the outlet side are automatically compensated by the pressure limiting valve.

If the pressure are port 2 rises above the set value, the surplus compressed air is discharged to atmosphere through the valve outlet.

When exhausting the inlet side (port 1), the pressure opens the outlet side (port 2) of the valve inlet. The pressure relief allows the diaphragm to return to its initial position. Port 2 is exhausted to port 2 via the open valve inlet.

Installation

A stub with an M 10 thread is provided for mounting. The valve can also be installed in the piping without any particular mounting bracket. The attitude must be selected so that the adjuster screw points downwards.

Adjustment

The pressure can be adjusted with the adjusting screw within certain limits after undoing the lock nut (see the table of versions).

Rotation to the right = pressure increase

Rotation to the left = pressure decrease

Testing

Check that the pressure setting is correct (observe the vehicle manufacturer's data).

Technical data

Service pressure:	see the table of versions
Service temperature:	-40°C to +80°C
Ports:	M 22 x 1.5
Port designation:	1 = supply port 2 = delivery port



357 001 ...



357 004 ...



357 012 ...

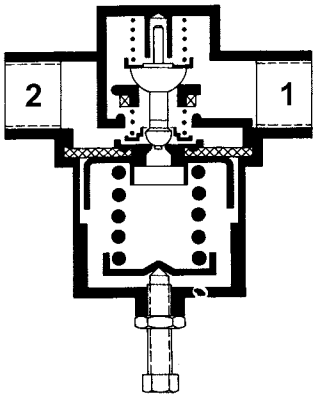

Versions

Part number	Settable pressure (bar)	Preset pressure (bar)	Operating pressure (bar)
357 001 002	0 - 1,6	0,5	8
357 004 021	0 - 7,5	6	10
357 004 024	0 - 7,5	3,5	10
357 004 025	0 - 7,5	4,5	10
357 004 051	5 - 10	5	10
357 012 021	6,5 - 8,5	7,3	12
357 012 022	6,5 - 8,5	7,5	12
357 012 031	0 - 8,5	5	12
357 012 032	0 - 8,5	6	12

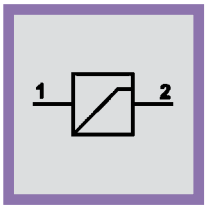

Symbol

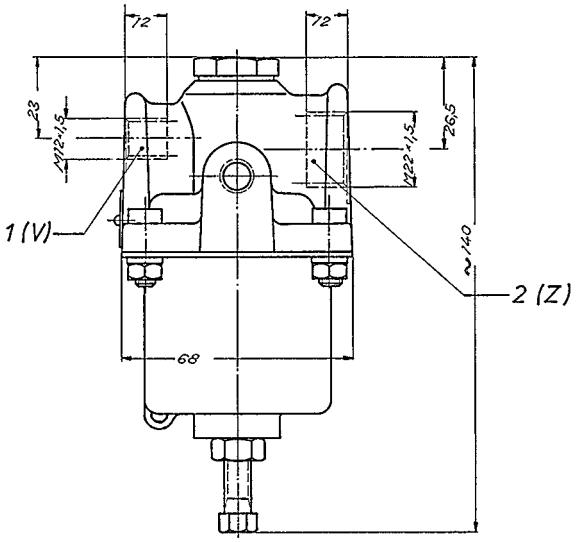

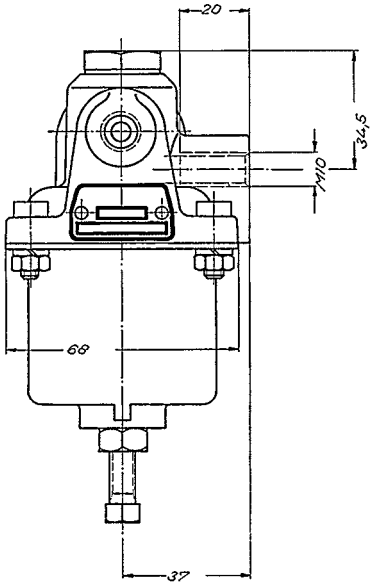

357 001

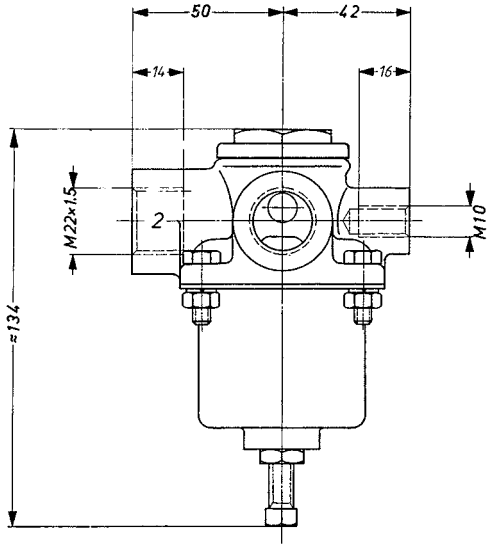

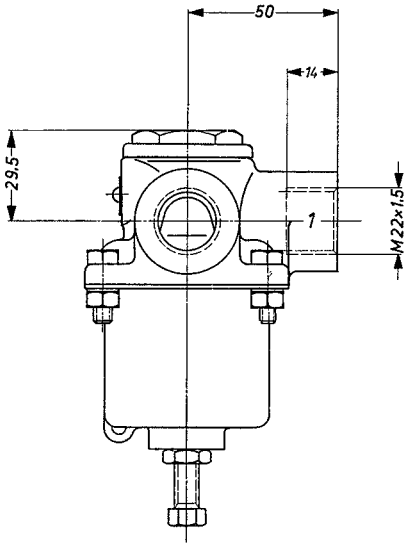

357 004

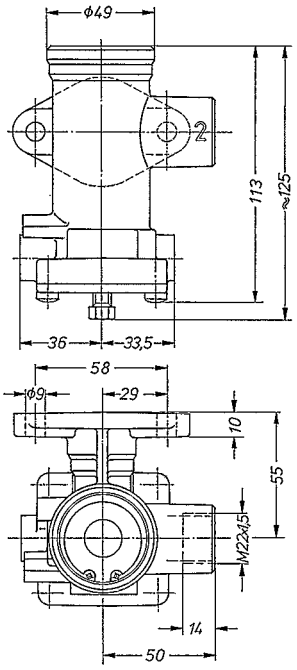

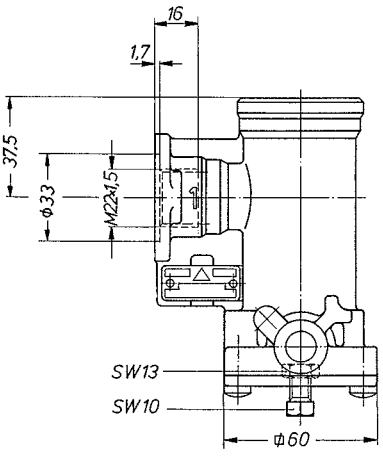

357 012

Shunt valve



352 005 401

Use

The special shunt valve enables the separate release of the front axle brakes (on the turntable) of drawbar trailers in order to facilitate coupling (pivotable drawbar). The rear axle brake remains activated during this operation.

Function

When coupling the supply line, the supply air flows to port 4 and pushes the piston with the control button into the upper end position. Port 1 is now connected to port 2. To disengage the front-axle brakes for re-coupling an uncoupled trailer, you must press the activation knob into the housing.

Port 2 is now connected via Port 3 and the front-axle brakes are disengaged. The rear-axle brakes remain activated. To re-activate the front-axle brakes after coupling, the activation knob must be pulled out of the housing to its stop.

Port 2 is now re-charged with air by the relay emergency valve/TrCM via Port 1, which re-activates the brakes.

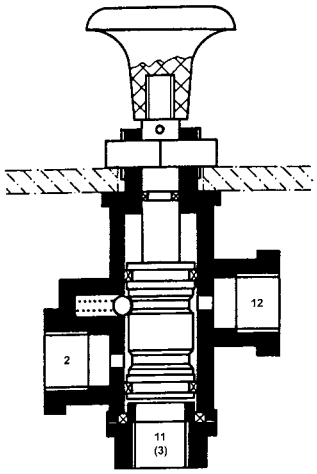

Installation

Depending on the version, the device is attached to the relay emergency valve either by two M8 screws or by flanged port. Ensure the activation knob can be accessed easily.

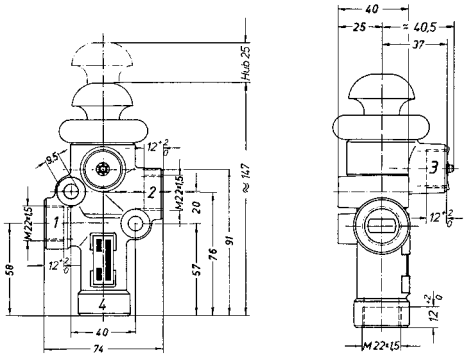

Testing

- Check that the valve functions correctly and is free from leaks
- When coupling the supply air, the valve must automatically switch into the filling position (at 2.5 bar)

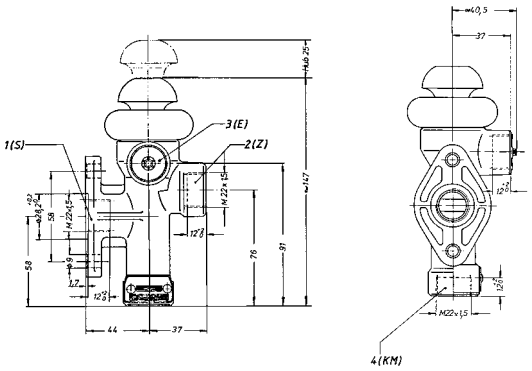

Technical data

Operating pressure:	p_e 8 bar
Operating temperature:	-40°C to +80°C
Medium:	Air
Changeover pressure:	p_e 2.5 bar
Ports:	M 16 x 1.5
Port description:	11 = 1st energy inflow 12 = 2nd energy inflow 2= energy outflow

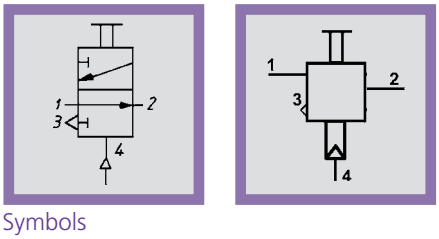

Symbols

Versions

Part number	Boot	Exhaust valve	Colour of knob	Attachment
352 005 401	with	with	black	with 2 screws M8
352 007 401	with	with	black	flange for relay emergency valve

Use

The automatic shunt valve, also known as the release valve, is used to release the trailer brakes when uncoupled if there is no shunt valve flanged to the relay emergency valve.

Function

When the supply line is coupled, supply air flows through port 11 and if the valve has been previously actuated, presses the piston with the switching knob screwed on to it into its top end position. The supply air can then flow from port 11 to port 2 and from there to the trailer brake control valve, which releases the brake. The compressed air flows from the tank to port 12 through a connecting line.

If the brake has to be released for manoeuvring purposes after uncoupling the trailer, the actuator knob must be pressed into the body.

If the brake needs to be re-actuated after manoeuvring, the actuator knob must be pulled out of the body as far as it will go.

Port 2 is then exhausted again through port 11 and the coupling head supply, and the Relay Emergency Valve initiates braking again.

Installation

Mounted with SW 27 or 32 union nuts in a hole for M 22 x 1.5. Tightening torque: 40 - 50 Nm. When removing/mounting the actuator knob, secure the actuator rod with a suitable means. Make sure that the actuator knob can move freely.



352 018 ...

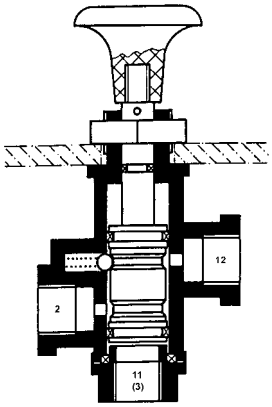

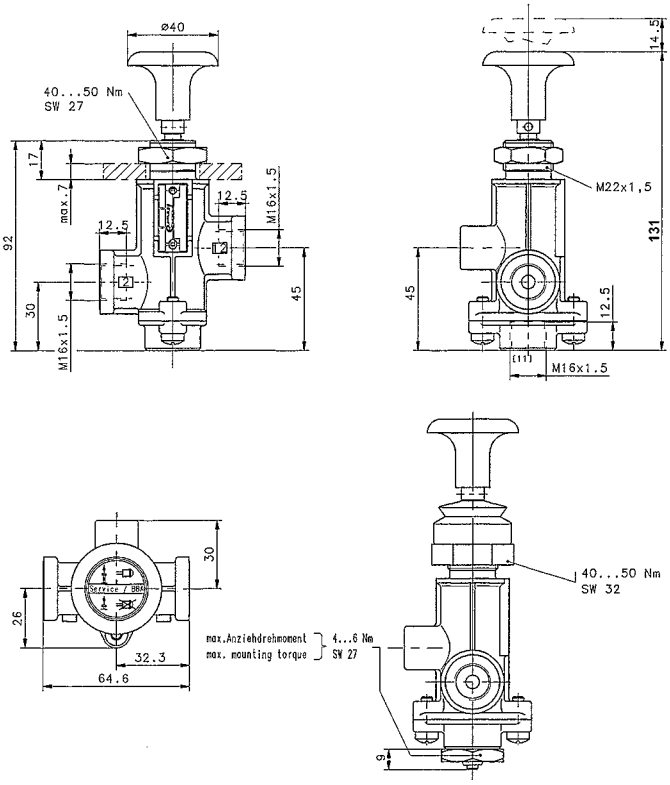

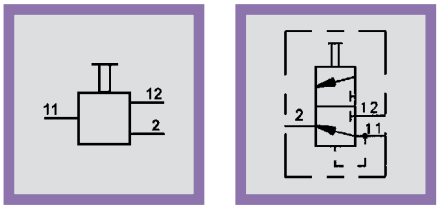

Symbols

Testing

› Test the valve for operation and leaks

› When the supply line is connected, the valve must automatically switch to the filling position (at p_e 2.5 bar)

Technical data

Service pressure:	p_e 8 bar
Service temperature:	-40 °C to +80°C
Medium:	air
Switching pressure:	p_e 2.5 bar
Ports:	M 16 x 1.5
Port designation:	11 = 1. supply port 12 = 2. supply port 2 = delivery port

Versions

Part number	Boot	Exhaust valve	Plate	Colour of knob	Nut
352 018 001	with-out	without	with	blue	SW 27
352 018 011	with	without	with	blue	SW 32
352 018 021	with	without	without	black (BW)	SW 32
352 018 031	with	with	without	black (BW)	SW 32

Park and shunt valve

Use

The park and shunt valve is used to actuate and release the spring brakes (park), and also release the automatic emergency braking (shunt), on uncoupled trailers.

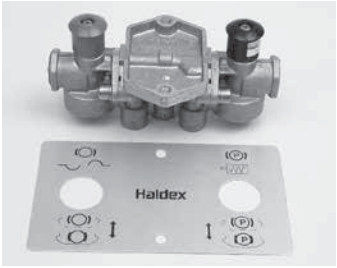

352 04. ...

Function

352 044/045 ...

Vehicle uncoupled, black knob pulled out, red knob pressed in. System pressure is present at port 11. Port 21 is exhausted via the supply coupling head. The service brake has been put into the emergency braking position by the Relay Emergency Valve/ emergency brake valve. Port 22 is charged with air (spring brakes released).

When the shunt valve (black knob) is pushed in, port 11 is connected to port 21 (service brake released). The service brake is actuated again by pulling out the shunt valve (black knob).

When the parking valve is pulled out (red knob), port 22 is exhausted. The spring brake is not exhausted (immobilised) until the two-way valve in the system reverses.

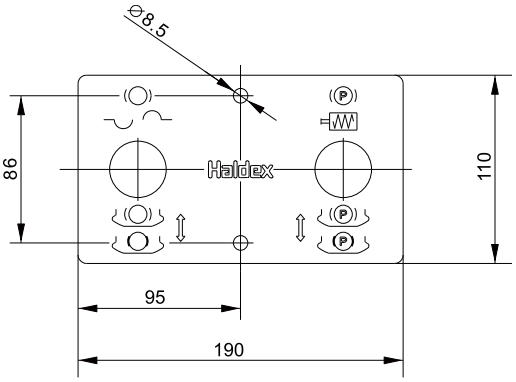

028 0383 09 instruction plate

352 046 ...
(emergency braking using the spring brakes)

Vehicle uncoupled, black knob pulled out, red knob pressed in. System pressure is present at port 11. Port 22 is exhausted via the supply coupling head (spring brakes immobilised). When the shunt valve (black knob) is pushed in, port 11 is connected to port 22 (spring brakes released).

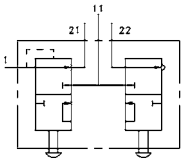

352 044 ...

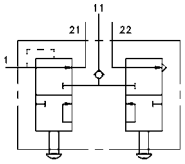

352 045 ...

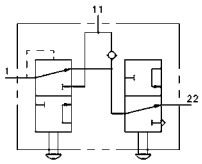

352 046 ...

Versions

Part number	Single check valve	Integrated emergency brake function	Instruction plate 028 0383 09
352 044 001	without	No, relay emergency valve required	with
352 044 011	without	No, relay emergency valve required	without
352 045 001	Port 11	No, relay emergency valve required	with
352 045 011	Port 11	No, relay emergency valve required	without
352 046 001	for park valve	Yes, via spring brakes	with

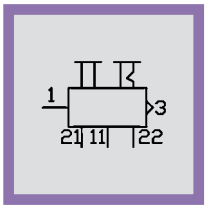

Symbol

Installation

The combined park and shunt valve should be mounted on the vehicle frame with its mounting flange, using two M8 bolts.

Actuator knobs between horizontal and 90° upwards. When painting, protect against the ingress of paint.

Testing

Check the combined park and shunt valve for operation and leaks.

Technical data

Service pressure:	p_e = 8.5 bar
Service temperature:	-40°C to +80°C
Tightening torque:	34 Nm
Medium:	air
Ports:	1, 11, 21, 22: M 16 x 1.5
Port designation:	2 = supply port 11 = 1. supply port 21 = 1. delivery port 22 = 2. delivery port

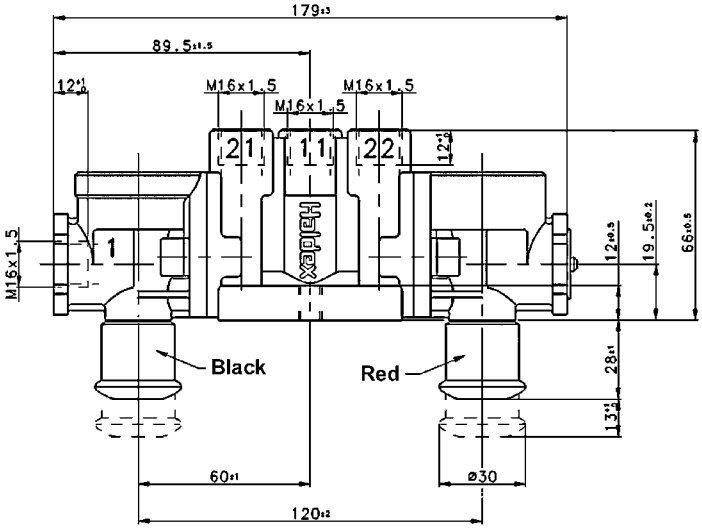

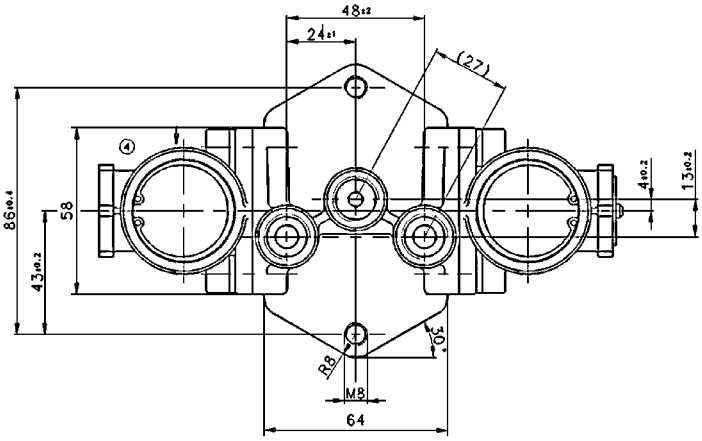

352 044 ... / 352 045...

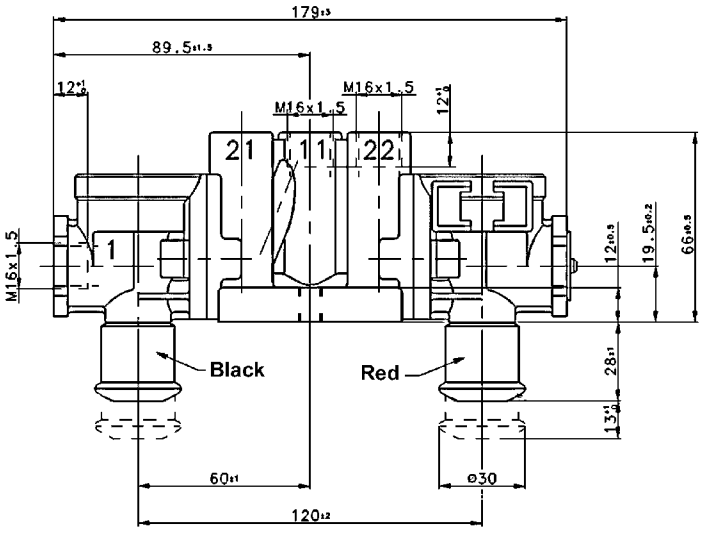

352 046 ...

Relay valve

Use

By installing a relay valve, air can enter and escape in large volumes quickly and proportionally. It therefore serves the purpose of shortening the response and threshold times in air brake systems.

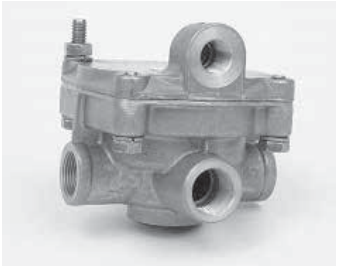

355 018 ... / 355 093 ...

Function

If compressed air is applied at Control Port 4, the control piston moves downwards, the outlet is closed, the inlet opened and the Reservoir pressure at Port 1 is directed to the Delivery Port 2 corresponding to the control pressure.

The inlet is closed and the outlet remains closed when the pressure at the Port 2 (this pressure is also applied to the underside of control piston) is equal to the pressure at Port 4. A termination setting is provided. Each change in pressure at Port 4 results in a change in pressure at Port 2.

If air is allowed to escape at Port 4, then the inlet is closed, the outlet opened and air escapes from Port 2 via Exhaust Port 3.

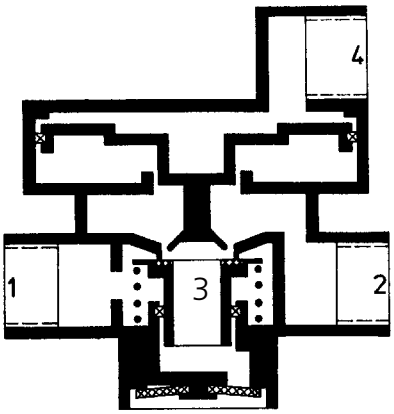

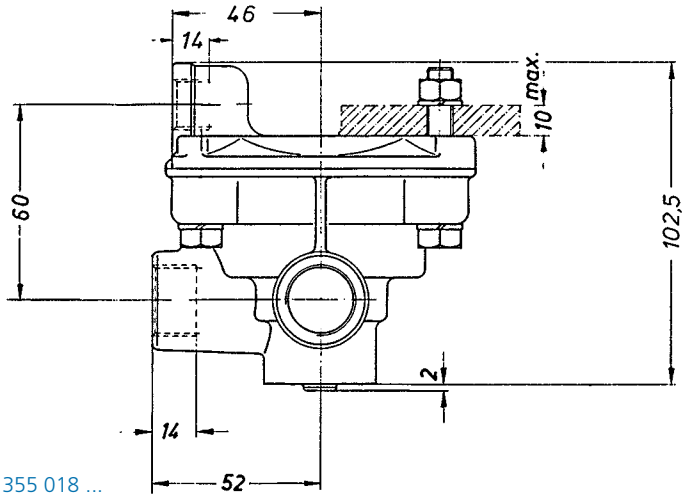

355 018 ...

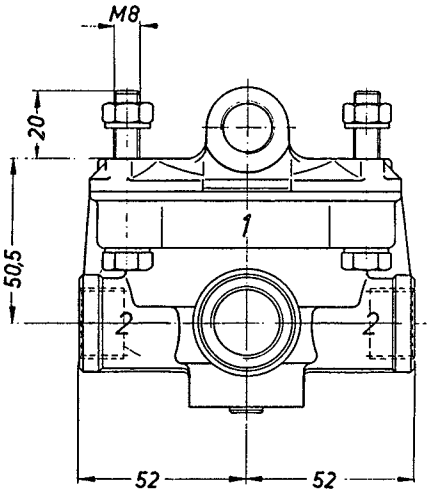

Installation

The stud bolts provided are used for mounting the valve. The vent must face downwards.

Testing

If defects are found during brake tests, brake inspections or when driving, the relay valve must be thoroughly inspected and replaced if necessary. Checking check function and for leaks.

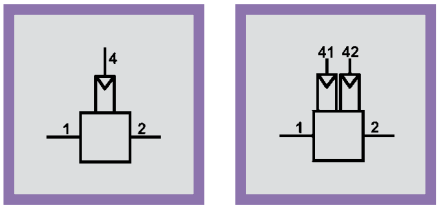

Symbols

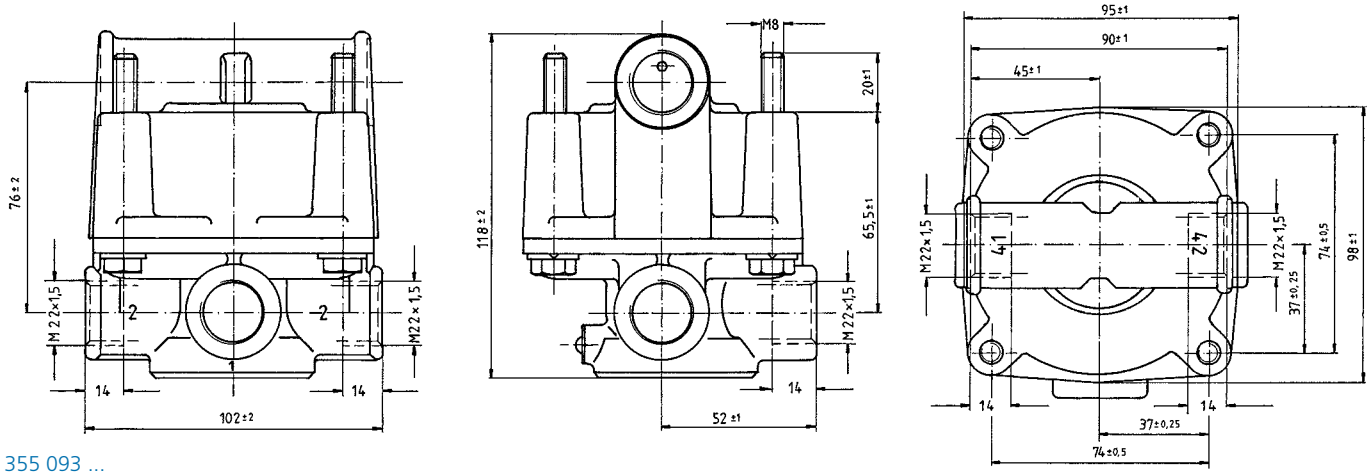

355 093 ...

Technical data

Operating pressure:	p_e max 10 bar
Operating temperature:	- 40°C to + 80°C
Ports:	see versions
Port description:	1 = supply 2 = delivery 4 (41/42) = control

Functional diagram

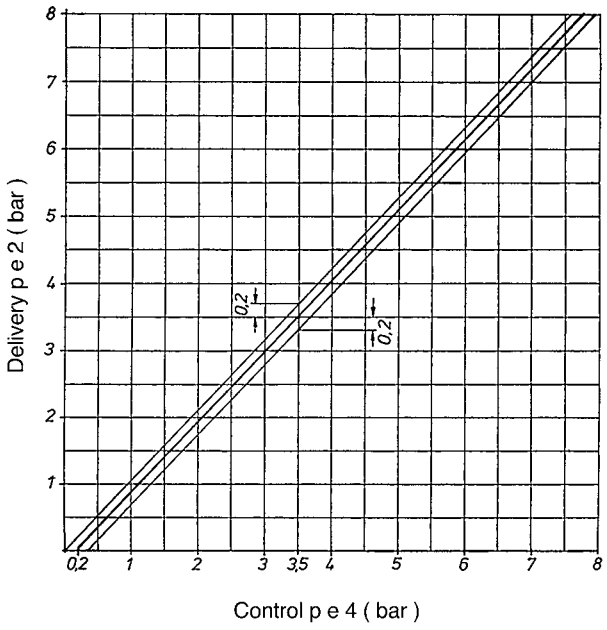

Versions

Part number	1	2	4	Mounting
	Threads on ports			
355 018 001	M 22 x 1,5	M 22 x 1,5	M 16 x 1,5	2 Bolts with nuts and spring lock washer
355 018 011	M 22 x 1,5	M 22 x 1,5	M 22 x 1,5	4 Bolts without Nuts and lock washer
355 018 071	M 22 x 1,5	M 16 x 1,5	M 16 x 1,5	4 Bolts without Nuts and lock washer
355 093 001	M 22 x 1,5	M 22 x 1,5	M 22 x 1,5	4 Bolts without Nuts and lock washer

Quick release valve

Use

Air can be quickly exhausted by fitting a quick release valve.

The top port is connected to the actuator valve, and the side ports to the brake chambers. Another typical application is to use as a dump valve in air suspension systems, e.g. with tipper vehicles (only 356 001 011).



356 001 ...



356 022 ...

Function

When air is applied to the top port, the outer edge of the diaphragm folds over and compressed air flows to the side ports. If the application of air through the top port is interrupted by the actuator valve, the volume from the actuator valve to above the diaphragm is exhausted via the actuator valve. The compressed air from the brake chambers passes through the side ports and pushes the outer edge of the diaphragm against the seat and lifts the inner seat. The volume from the brake chambers to under the diaphragm is exhausted via the quick-release valve.

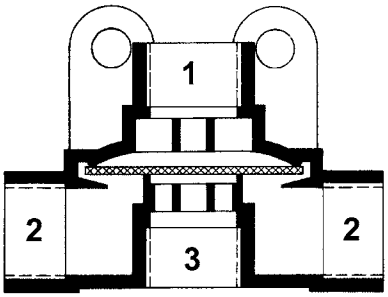

Installation

The quick-release valve should be installed directly in the piping near the brake chamber, with the exhaust port pointing downwards. A filter, or in the case of vehicles with a fording capability a snorkel, can be screwed into the exhaust port if desired.

A bracket with two M10 holes is provided on the quick-release valve for mounting it on the vehicle.

Note that on 350 036/037 the holes in the two-way valve must not be used for mounting.

Functional diagram

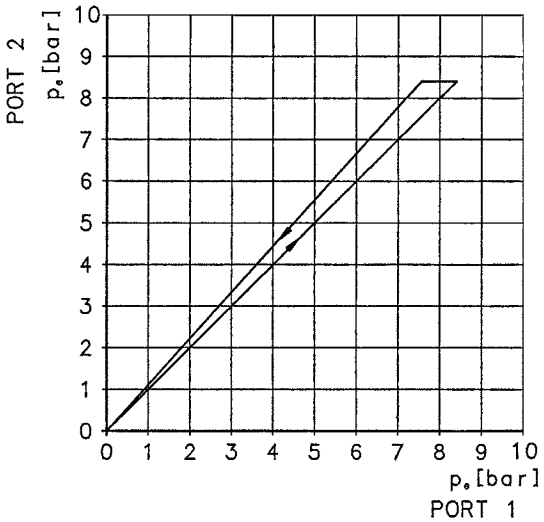

Testing

- Check that the stepped variability of the actuator valve is not adversely affected when the quick-release valve is actuated
- Test the operation of the quick-release valve

Technical data

Service pressure:	10.5 bar
Service temperature:	-40°C to +80°C
Ports:	see the table of versions
Port designation:	2 = supply port 11 = 1. supply port 12 = 2. supply port 2 = delivery port 3 = exhaust

Combinations of quick release valve and two-way valve

Part number	11 + 12	2	3
	Threads on ports		
350 036 201	M 16 x 1,5	4 x M 16 x 1,5	without thread
350 036 211	M 16 x 1,5	4 x M 16 x 1,5	M 22 x 1,5
350 037 201	M 22 x 1,5	2 x M 16 x 1,5	without thread
350 037 211	M 22 x 1,5	2 x M 16 x 1,5	M 22 x 1,5

Versions

Part number	1	2	3	Note
356 001 001	M 22 x 1,5	M 22 x 1,5	M 22 x 1,5	-
356 001 011	M 22 x 1,5	M 22 x 1,5	M 22 x 1,5	with reinforced diaphragm
356 006 011	M 22 x 1,5	M 22 x 1,5	without thread	
356 022 001	M 22 x 1,5	4 x M 16 x 1,5	without thread	-
356 022 011	M 22 x 1,5	4 x M 16 x 1,5	M 22 x 1,5	-
356 022 021	1/2" -14NPTF	4 x 1/4" -18 NPTF	without thread	-
356 022 031	M 22 x 1,5	4 x M 16 x 1,5	M 22 x 1,5	-
356 023 001	M 22 x 1,5	2 x M 16 x 1,5	without thread	-
356 023 011	M 22 x 1,5	2 x M 16 x 1,5	M 22 x 1,5	-
356 023 021	1/2" -14NPTF	2 x 1/4" -18 NPTF	without thread	-
356 023 031	M 22 x 1,5	2 x M 16 x 1,5	M 22 x 1,5	-

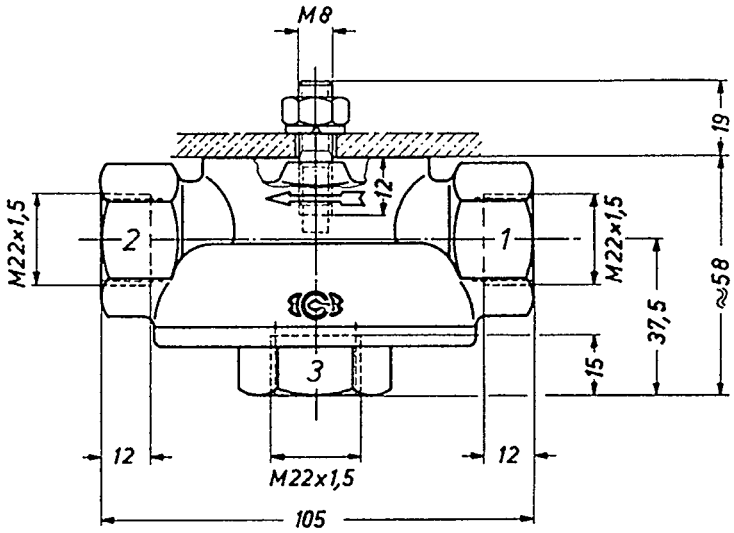

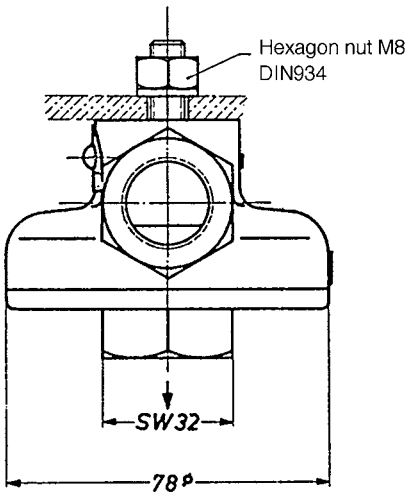

356 001

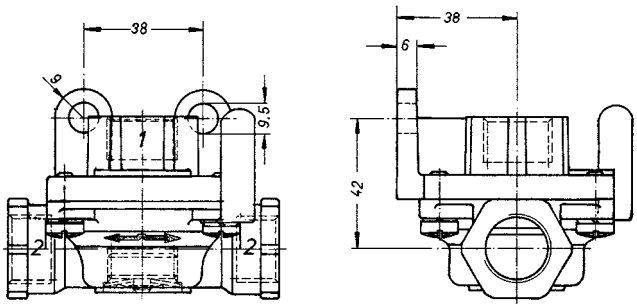

356 006 011

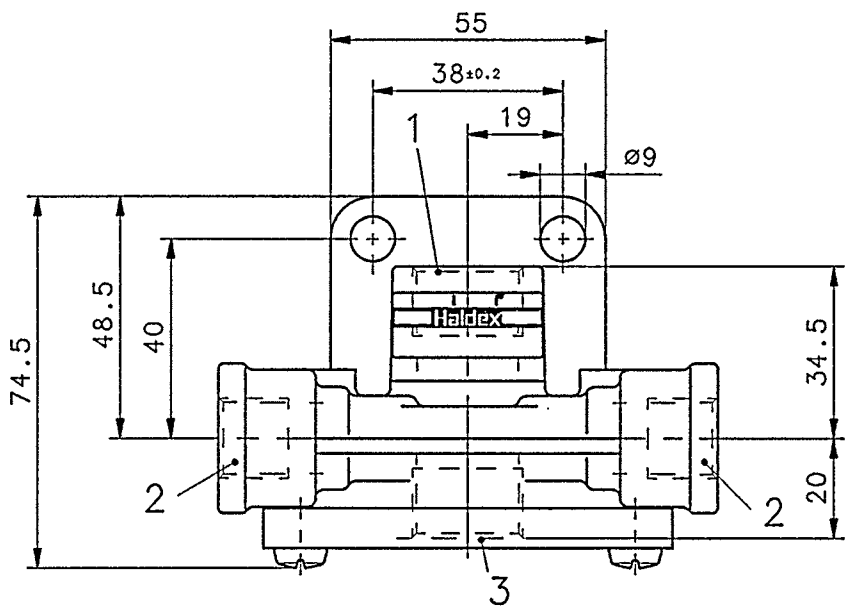

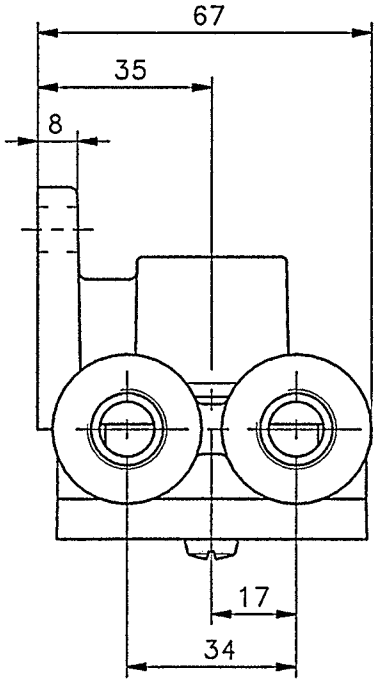

356 022

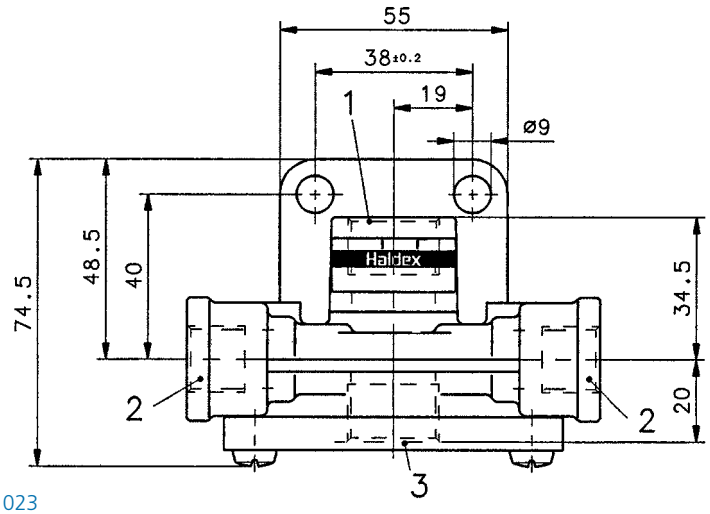

356 023

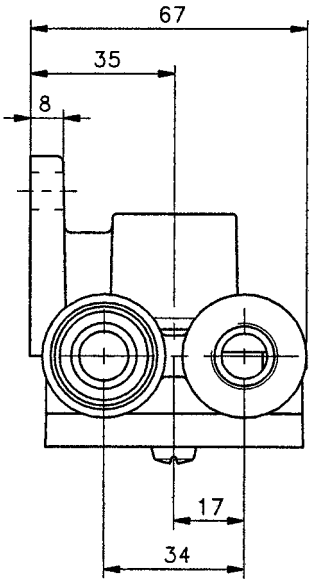

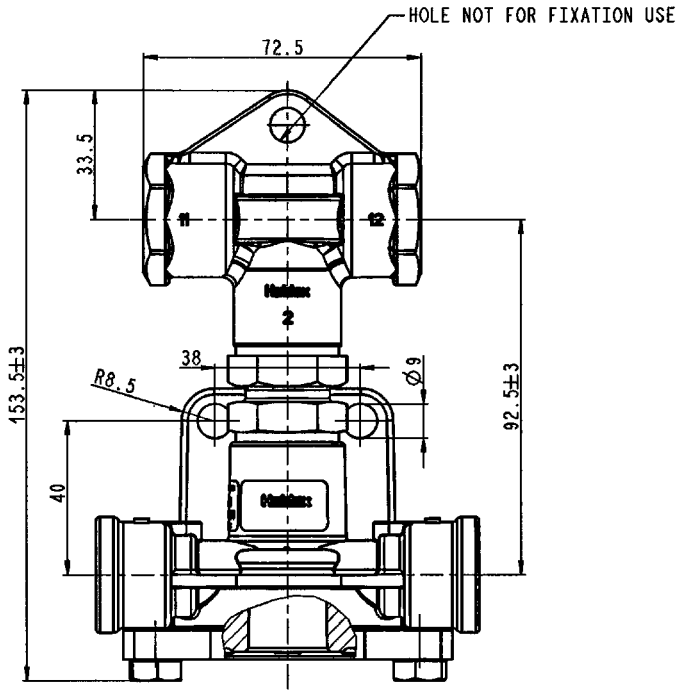

350 036 / 037

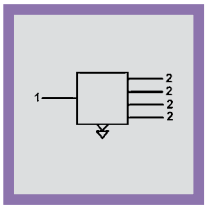

Symbol

Regulating valve

Use

During the braking procedure, a dynamic axle load displacement occurs, i.e. the rear axle is relieved, and the front axle is additionally loaded. For this reason, larger air brake chambers are generally installed on the front axle. In the partial braking range, i.e. at low dynamic axle load displacement, a built-in pressure regulating valve (with kinked characteristic curve) reduces the pressure in the large air brake chambers enabling, in this way, matching of the brake forces between the individual axles of the vehicle. A quick release effect is also provided.

The pressure regulating valve has a 1:1 pressure advance control up to approx. 0.5 bar in order to facilitate overcoming the response stages of the brakes and of any subsequently connected valves. The pressure is reduced from applied pressures 0.5 bar onwards.

Function

Port 1 is connected to the actuation valve, the ports 2 are linked to the brake chamber. When air is allowed to enter port 1, initially the compressed air flows in unreduced through ports 2 to the brake chambers. The balance piston moves upwards when a pressure $p_e2 > 0.5$ is reached on the underside of the piston. The inlet seat is closed as soon as the ratio of applied to modulated pressure corresponds to the area ratio (underside/top side) of the balance piston. The pressure at port 2 is therefore reduced corresponding to the surface area ratio of the balance piston (phase 1 in functional diagram). The piston is raised from its seat against the force of the spring when the applied pressure p_e 1 has reached the value of the "kink" in the functional diagram. Compressed air can now be applied to the upper annular surface of the balance piston via the bore holes. This means that the pressure-loaded areas of the upper and lower side of the balance piston are equal. As a result, the rate of pressure reduction is reduced and completely stopped at an applied pressure p_e 1 = 3.0 ± 0.2 bar (356 005 101) or 4.0 ± 0.2 bar (356 005 102), (p_{End}) (phase II in functional diagram).

If the pressure drops at port 1, the balance piston is pressed upwards, the inlet seat is closed, the outlet seat opened and air is allowed to escape from the brake chambers connected to ports 2.

Adjusting the pressure adaptation (p_{End})

The adjusting screw can be turned after releasing the counter nut

- In clockwise direction - retarded pressure matching (p_{End})
- In anti-clockwise direction - advanced pressure matching (p_{End})



356 005 ...

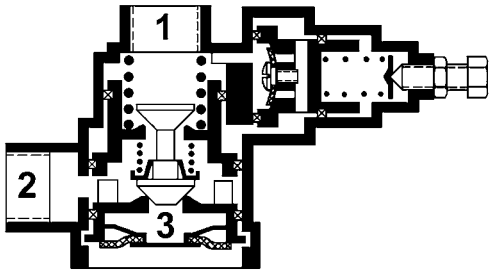

Functional diagram

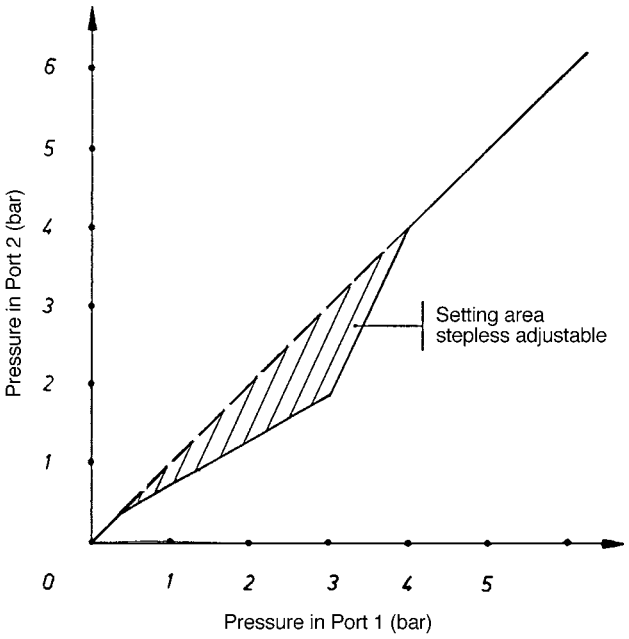

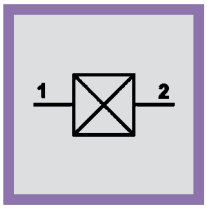

Symbol

Installation

Normally the pressure regulating valve is installed before the large brake chambers.

The vent must face downwards and the screw for adjusting the pressure balance must be easily accessible.

The valve is mounted by means of two M8 screws in the threaded holes M8.

Adjusting the adaptation pressure p_{End}

The adaptation pressure p_{End} must always be adjusted in accordance with the manufacturer's specifications for the relevant vehicle or trailer (e.g. brake calculation).

After releasing the locknut, the adaptation pressure p_{End} can be adjusted from 0 to approx. 4.0 bar.

Tightening the adjustment screw

Increasing the adaptation pressure and pressure reduction; p_{End} max. approx. 4.0 bar.

Loosening the adjustment screw

Decreasing the adaptation pressure and pressure reduction. After adjustment with the locknut, re-tighten and mark the position of the adjustment screw.

(Recommendation: Secure with shrink tube or mark with a coloured dot.)

Testing

- Testing that device functions correctly and is free from leaks
- Adaptation pressure p_{End} in accordance with vehicle/trailer manufacturer's specifications

Technical data

Operating pressure:	max. 8 bar
Operating temperature:	-40°C to +80°C
Adaptation pressure p_{End}:	0-4.0 bar
Ports:	1, 2: M 22 X 1.5
Port description:	1 = Supply 2 = Delivery

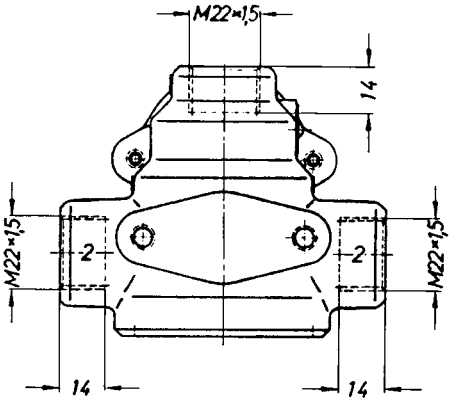

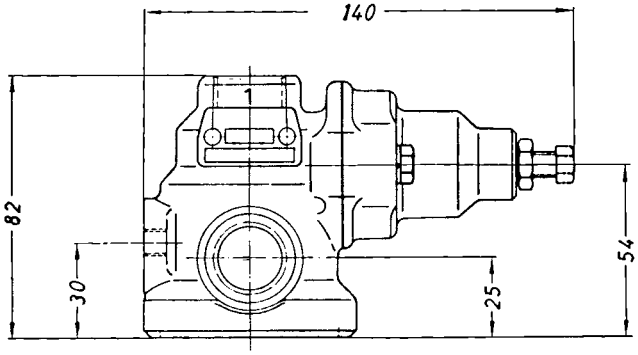

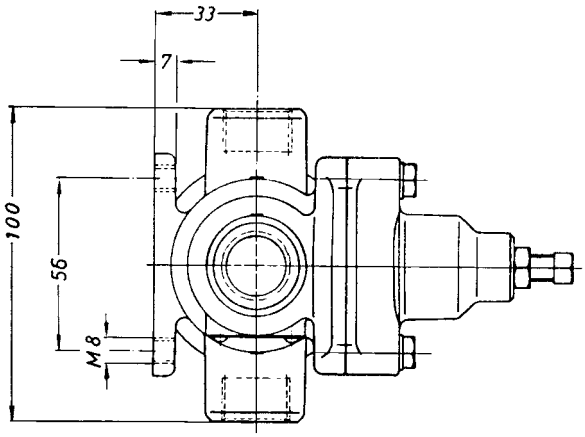

Versions

Part number	Pressure alignment at … bar
356 005 101	3,0
356 005 102	4,0
356 005 103	2,5
356 005 104	3,5

Use

During the braking procedure, a dynamic axle load displacement occurs, i.e. the rear axle is relieved, and the front axle is additionally loaded. For this reason, large brake chambers are normally installed on the front axle.

In the partial braking range, i.e. at low dynamic axle load displacement, a built-in pressure regulating valve (with straight characteristic curve) reduces the pressure in the large brake chambers, thereby making it possible to adapt the brake forces between the individual axles of the vehicle. The valve also features a quick release effect.

Function

Port 1 is connected to the actuating valve; port 2 is linked to the brake chambers.

When air is allowed to enter at port 1, the diaphragm and the piston are pressed downwards against the force of the preloaded compression spring when a set opening pressure has been reached.

The outlet seat is closed and the inlet seat opened. The compressed air flows through port 2 to the brake chambers.

The applied pressure p_e1 ($p_e1 = p_e2$) is no longer reduced when the set adaptation pressure (p_{End}) is reached.

Installation

The installation site should always be selected in accordance with the valve sequence, which is a constituent part of the brake calculation of each vehicle. In case of doubt, consult the vehicle manufacturer. The regulating valve is generally installed before the larger brake chambers.

The adjustment screw and the exhaust must point down. Any test point must be easily accessible for measuring the pressure (depending on the version).

The device is attached to whatever type of console is present in the particular version either with the two M6 screws provided or with two additional M8 screws, especially if the valves are attached to the ports 2 with flexible lines.

The exhaust must not be covered with paint when painting the vehicle.

Depending on the version, the device has been factory set to a particular adaptation pressure p_{End}. After completion of installation, check whether the equalisation pressure p_{End} corresponds to the manufacturer's specifications (brake calculation).

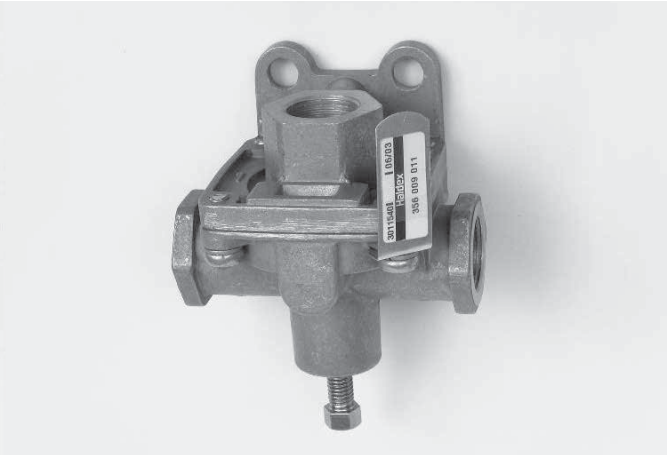

356 009 ... / 356 010 ...

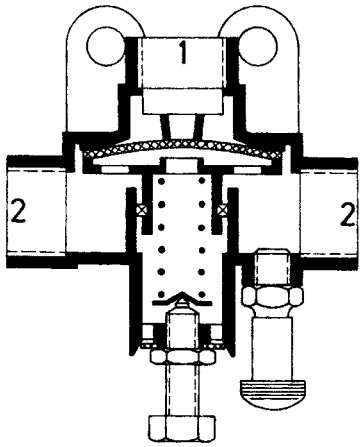

Functional diagram

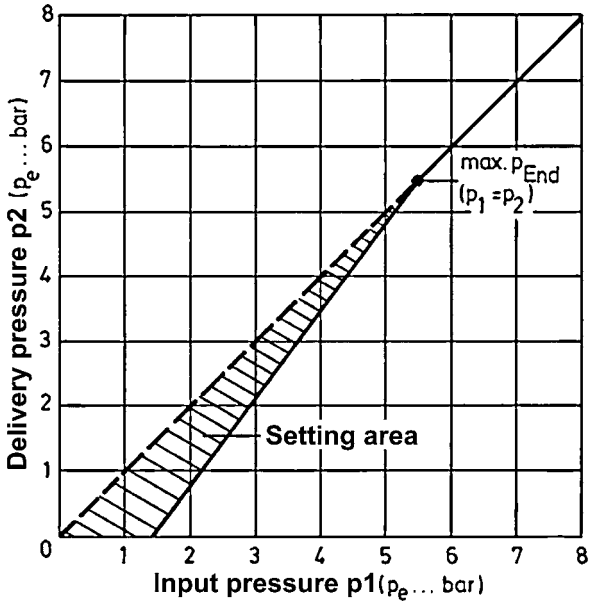

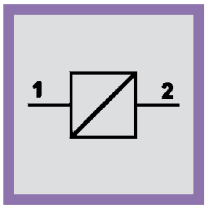

Symbol

Adjusting the equalisation pressure (p_{End})

The equalisation pressure p_{End} must always be adjusted in accordance with the manufacturer's specifications for the relevant vehicle or trailer (e.g. brake calculation).

After releasing the locknut, the equalisation pressure p_{End} can be adjusted from 0 to approx. 5.5 bar.

Tightening the adjustment screw

Increasing the equalisation pressure and pressure reduction; p_{End} max. approx. 5.5 bar.

Loosening the adjustment screw

Decrease the equalisation pressure and pressure reduction; p_{End} min. 0 bar.

The adjustment screw must never be loosened to its limit, because this can block the flow from Port 1 to Port 2.

After adjustment, re-tighten the locknut.

Testing

- Test that device functions correctly and is leak tight
- Equalisation pressure p_{End} in accordance with vehicle/trailer manufacturer's specifications

Technical data

Operating pressure:	max. 8 bar
Operating temperature:	-40°C to +80°C
Adaptation pressure p_{End}:	0-4.0 bar
Ports:	1, 2: M 22 X 1.5
Port description:	1 = Supply 2 = Delivery

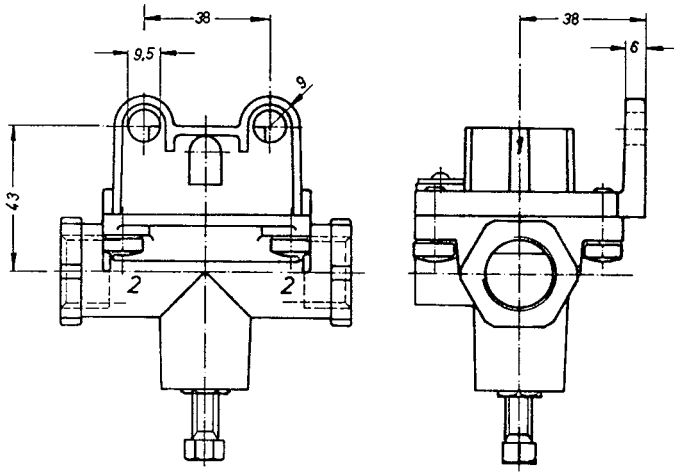

Version A

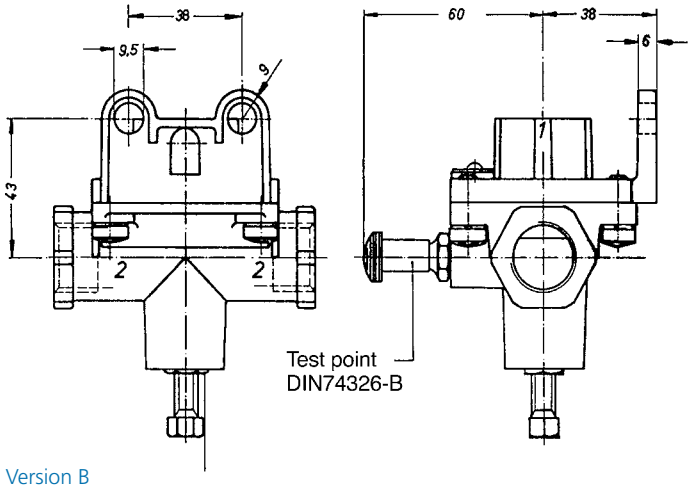

Version B

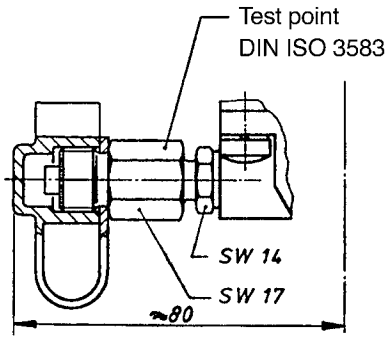

Version C

Versions

Part number	Version	Opening pressure (bar)	Adaptation at … bar	Bracket	Test point
356 009 011	A	0,5	2,0	Yes	No
356 009 012	A	0,3	1,3	Yes	No
356 010 011	B	0,8	3,5	Yes	Yes
356 010 031	B/C	0,8	3,5	Yes	Yes

Mechanical load sensing valve

Use

The load sensing valve (L.S.V.) serves the purpose of automatically adapting the brake pressure and therefore the brake force according to the load of the vehicle.

Automatic load-dependent brake force regulation is compulsory for semi trailer tractors with a permissible total weight of more than 7.5 t and semi-trailers with the sum of the permissible axle loads greater than 7.5 t when the vehicle was registered for the first time from 1st January 1963.

EC regulations (RKEG 74/132 EWG) as well as the ECE stipulation No. 13 specify automatic brake force regulation for all motor vehicles and trailers with a total weight exceeding 3.5 t provided brake force regulation is necessary.



601 002 ... / 601 013 ...

Function

If the load of the vehicle is changed, then as a result, the deflection of the vehicle springs also changes. While loading the vehicle, the vehicle body approaches the axles, when unloading the distance between the vehicle body and the axle becomes greater. The travel of the vehicle body can be used for controlling the load sensing valve. The load sensing valve is mounted to the chassis of the vehicle, the control cable together with the spring is mounted an a bracket bolted or welded to the axle.

The control cable is secured to the control lever of the load sensing valve by means of a clamp. When unloading the vehicle, the tension spring pulls the control lever downwards

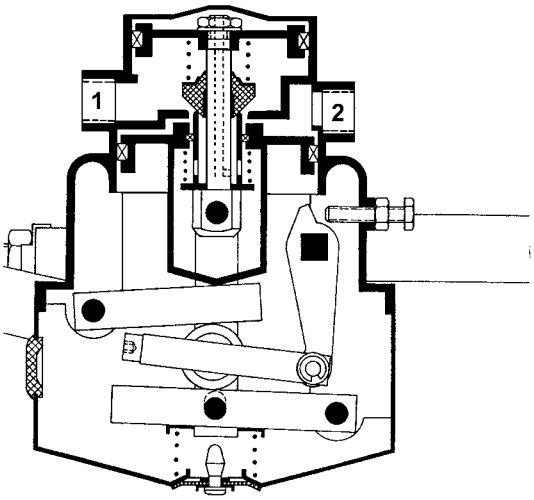

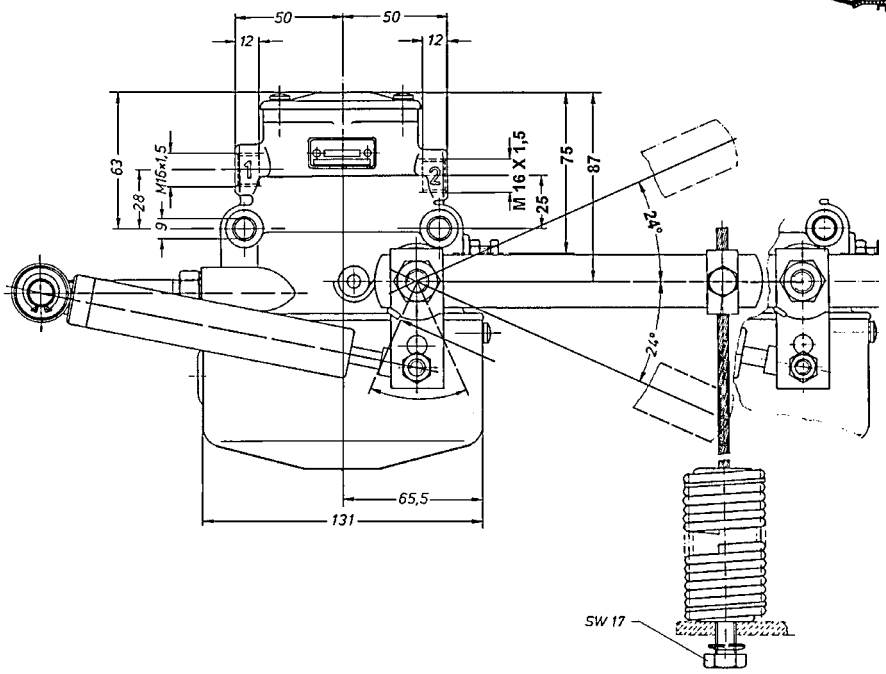

601 002 001

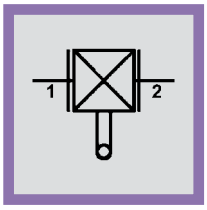

Symbol

over the cable. When the vehicle is loaded, the control lever is raised by a spiral spring until the control cable is tensioned. The shock absorber mounted on the control lever, together with the tension spring, takes up the dynamic impact caused by unevenness in the road. The load sensing valve operates statically, i.e. changes in the spring path which occur during braking do not change the control ratio. The load sensing valve is slightly locked during braking.

Release Position, Half Load

The brake piston moving in the upper part of the housing is connected to the valve sleeve by means of the piston rod on which the double valve cone is mounted in a floating arrangement. The valve sleeve guides the balance spring. The locating pin supported by a compression spring on the housing is connected to the thrust piece by means of the balance lever and the variable slide piece.

A change in movement downwards or upwards executed by the control lever results in the slide piece being shifted and therefore changes the effective transmission ratio between the brake piston and balance piston.

The ratio of the pistons and balance lever is set in such a way that, in setting "load", the pressure applied at port 1 is modulated at port 2 uncontrolled, i.e. control ratio p_e1/p_e2 = 1:1. In the position "no-load", the applied pressure p_e1 can be reduced in a control ratio of 6:1 with respect to the modulated pressure p_e2. Each control ratio between "no-load" and "load" is continuously variable. In the release position, the double valve cone closes
the inlet seat; port 2 is connected to atmosphere via the open outlet seat.

Brake Setting, Half Load

When the brake is actuated, compressed air flows through port 1 and presses the brake piston upwards while the valve sleeve is pressed against the double valve cone. The outlet seat is now closed, the inlet seat opened. The compressed air now flows to port 2 and is applied to the balance piston. The force acting on the balance piston is transmitted via the thrust piece and the balance levers to the brake piston thereby moving it downwards. The inlet seat is closed, the outlet seat remains closed. A so-called partial braking setting is obtained.

Each change in pressure at port 1 results in a change in pressure at port 2 corresponding to the set control ratio.

The brake piston moves back into its initial position if air is allowed to escape at port 1. Air escapes via port 2 via the now open outlet seat and the vent valve on the housing.

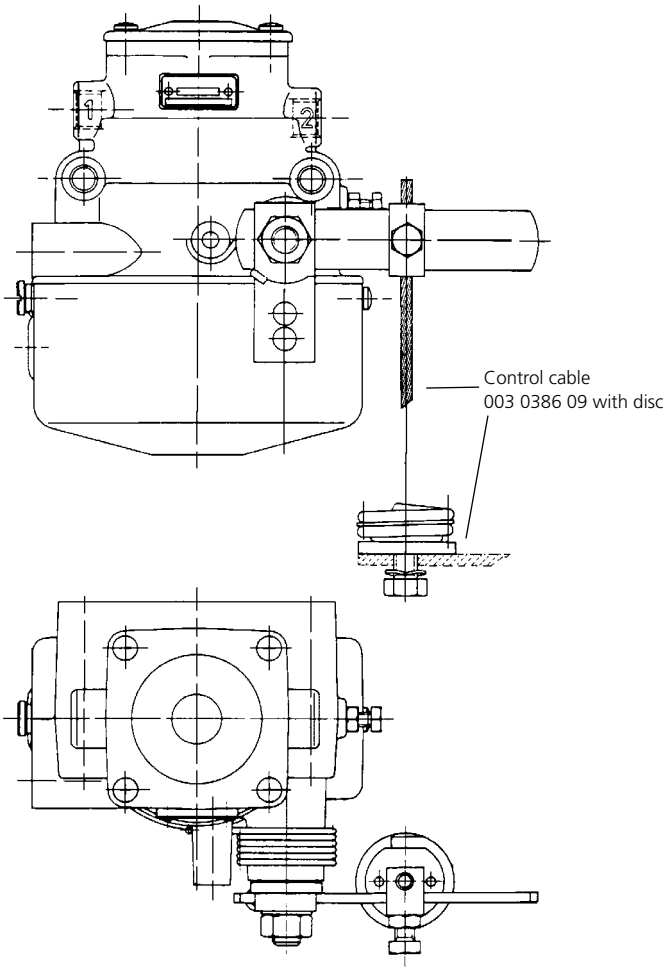

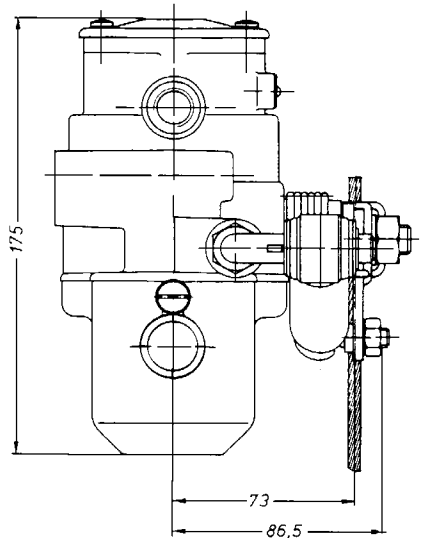

601 002 021

The load sensing valve has a proportional characteristic equipped with a pressure advance control of p_e = 0.3 ... 0.4 bar for overcoming in the response stages of subsequently connected brake devices.

In the event of the control cable breaking, the control lever is raised to the position "load" by the shock absorber or spiral spring. The pressure applied at port 1 is directed to port 2 uncontrolled.

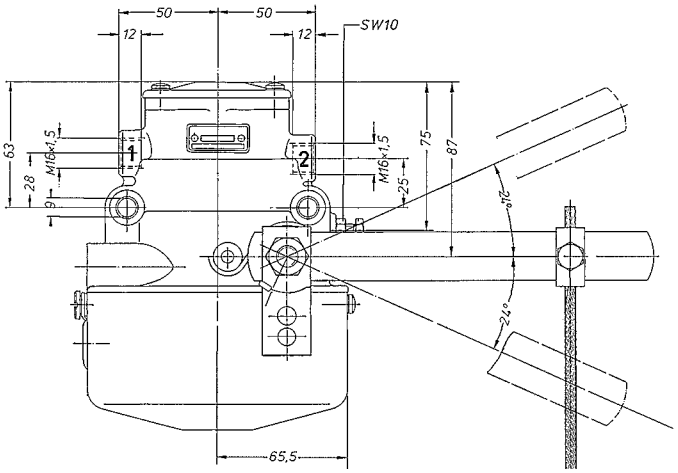

Brake setting, loading

The transmission of the pistons and weighing lever must be arranged in such a way that, when in the "loading" position, the pressure introduced in Port 1 p_e1 is controlled without regulation – i.e. the regulating ratio p_e 1/p_e 2 = 1:1 – from Port 2.

Installation

The load sensing valve regulator is attached with screws, nuts and washers to the attachment holes that are drilled into the assembly.

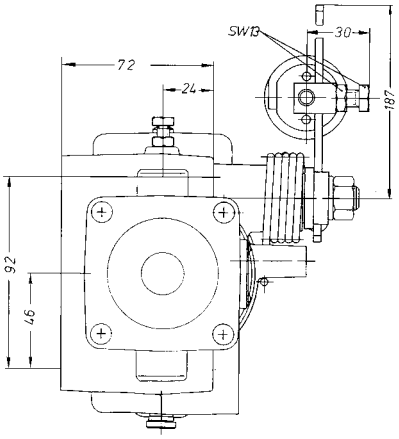

Attaching the control cable

The control cable's spring is attached via an M12 Allen bolt to the bracket that is fitted to the axle. The bracket should be at least 8 mm thick. If the bracket is welded in place, authorisation must be sought from the manufacturer for this. The welded seams must always be in the neutral zone. Attach the control cable with a cable clamp in the "Empty" control lever position at the calculated interval (lever length) from the pivot of the control lever (torque for control screw: 6 Nm). In order to balance the settling of the vehicle springs, the supplied 5 mm thick disc should be fitted underneath the control spring of the control cable. If the vehicle spring has settled by approx. 5 mm, this disc is removed. Further adjustment can be made by moving the control cable in the clamp.

In order to avoid damage or excessive wear on the linkage components, the following points must be noted when installing the cable link:

- The control cable should be as long as possible
- The control cable should be within the lever's level of movement.
- Ensure all parts can move easily
- Attach the control cable as close as possible to perpendicular from the control lever on the bracket

The control cable is attached to the control lever or the load sensing valve regulator with a different linkage component for

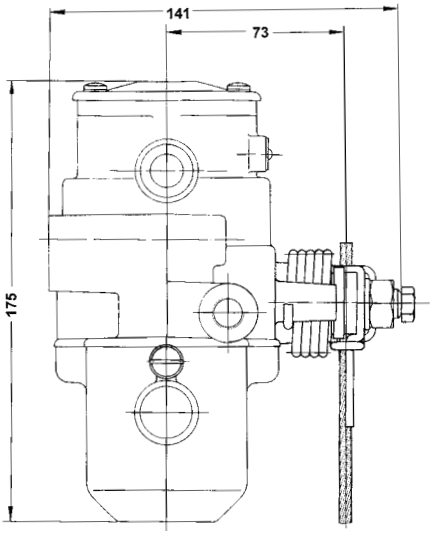

601 013 001 - 011

each version. When unloading the vehicle, the control springs pull the control lever downwards via the cable. If the vehicle is loaded, the control lever is lifted by a leg spring until the control cable is tensioned. Linking the cable and spring enables the spring deflection to be tapped from an axle even with twin-axle assemblies.

Example

Control ratio i R = 3:1

Control path fs = 30 mm

Derived from nomogram: lever length L = 52 mm

The unladen braking pressure must be adjusted after installing the load sensing valve on the vehicle.

The adjustment procedure is described in the following:

› Press control lever downwards as far as it will go.

› Apply a pressure p_e1 = 6.0 bar to port 1, measure the modulated pressure p_e2 from port 2.

Raise the control lever in stages - after venting p_e1 each time - until the required unladen braking pressure p_e2 is obtained for p_e1 = 6.0 bar.

› Hold control, lever in this position, screw in stop screw (M 6, 10 mm) until a resistance can be felt and tighten counter locknut.

Mounting the control cable: the spring of the control cable is secured by means of a hexagon bolt M 12 to the bracket mounted on the axle. The minimum thickness of the bracket should be 8 mm. If the bracket is welded, then permission must be obtained from the axle manufacturer for this purpose. The weld seams must always be in the neutral zone. With the control lever in unladen position, move the control cable together with the clip into the position (see 3.) at a determined distance (lever length) from the pivot point of the control lever (tightening torque of clamping screw 6 Nm).

A 5 mm thick washer is provided under the tension spring of the control cable in order to balance out the setting of the vehicle springs. This washer is removed when the vehicle spring has set by approx. 5 mm. Further readjustment is possible by moving the control cable in the clamp.

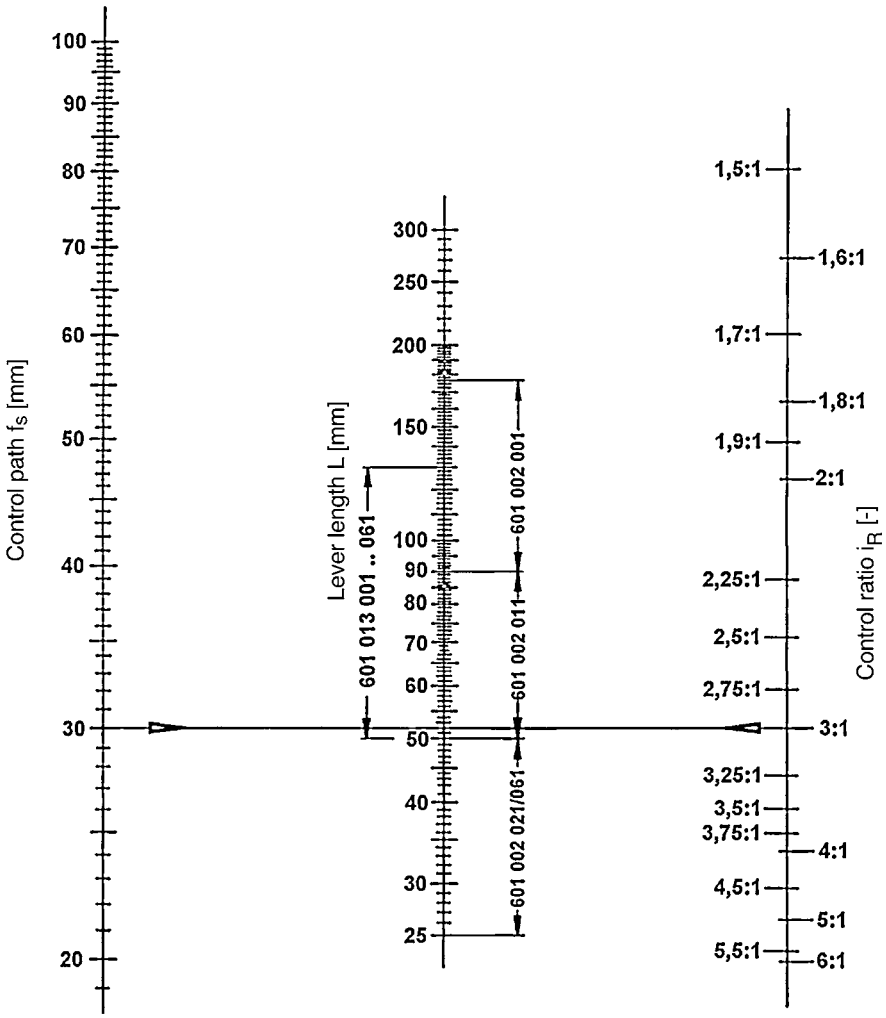

Alignment chart for ALB
601 002 ...
601 013 ...

This cable and spring arrangement makes it possible to measure the spring path of one axle even in the case of double axle units. In order to avoid damage or excessive wear of the link parts, the following points must be observed when installing the cable link:

› a) The control cable must be as long as possible.

› b) The control cable must be located within the moving plane of the lever.

› c) Ensure all parts move freely.

› d) Arrange control cable on the bracket as close to the vertical as possible with respect to the control lever.

Checking the modulated brake pressure in the control lever position "load":

Remove hexagon screw M 12 (for holding the control cable to the bracket).

The control lever or control cable moves upwards by the amount of the spring travel.

Apply 6.0 bar at port 1 and you should see 6.0 bar at port 2.

The technical data information is stamped on the separately supplied information plate, part No. 028 0216 09.

The information plate must be arranged securely and clearly visible in the vicinity of the vehicle chassis I.D. plate, i.e. on the front left of the vehicle viewed in the direction of travel.

Basic adjustment necessary when the values specified in point 3 and point 5 are not obtained.

The load sensing valve is adjusted at the manufacturer so that

At 6.0 bar input pressure at port 1 and with the control lever in the laden position

› 6.0 bar output pressure is obtained at port 2 (control ratio p_e1/p_e2 = 1:1)

› At 6.0 bar input pressure at port 1 and the control lever in the unladen position a 1.0 bar = + 0.3 bar pressure is obtained at port 2 (control ratio p_e1/p_e2 = 6:1).

This adjustment must not be changed.

However, basic adjustment is necessary if this setting has been changed.

Basic adjustment of the load sensing valve

› The control lever must be in the laden position as the result of the automatic return.

› Remove the rubber cap on the housing.

› Using screwdriver DIN 911-5 turn the screw for fine adjustment (on slide piece) as far as it will go in a clockwise direction.

› Apply a pressure of 6.0 bar at port 1 and measure the modulated pressure at port 2. If the basic adjustment is correct, p_e2 must be equal to p_e1. If this is not the case, the difference between p_e1 and p_e2 must be adjusted until equal.

› Allow air to escape at port 1 and turn fine adjustment screw in an anticlockwise direction.
The number of turns equals the difference determined in (d) multiplied by 10.

Example

› p_e1 = 6.0 bar
p_e2 = 5.7 bar
(d) = p_e1 - p_e2 = 6.0 bar - 5.7 bar = 0.3 bar
0.3 bars x 10 = 3 turn.

› Attach rubber cap to housing.

› Apply 6.0 bar at port 1, measure pressure at port 2.
it should now equal Port 1

› Vent port 1, press control lever downwards as far as it will go.

› Apply 6.0 bar at port 1, the pressure at port 2 must equal 1.0 + 0.3 bar,

If the value at port 2 is not obtained, release the counter nut of the stop screw and vary the screw-in depth of the stop screw so that at a pressure of 6.0 bar applied at port 1 and with the control lever in the unladen position, a pressure of 1.0 bar + 0.3 bar is obtained at port 2.

Technical Data

Operating pressure:	max 10 bar
Operating temperature:	-40°C to +80°C
Ports 1, 2:	M 16 X 1.5
Port description:	1 = Supply in 2 = Delivery out

Versions

Part number	Shock absorber	Cable	Washer	poss lever length	maximum deflection of the spring	smallest +maximum deflection	maximum
						Mounting height	
601 002 001	Yes	003 0380 09	no	90 - 176 mm	135 mm	140 mm	1045 mm
601 002 021	no	003 0386 09	Yes	25 - 50 mm	108 mm	120 mm	1025 mm
601 002 031	Yes	003 6340 09	no	90 - 176 mm	60 mm	100 mm	985 mm
601 002 071	no	003 6340 09	Yes	25 - 50 mm	60mm	100 mm	985 mm
601 013 001	no	003 0386 09	Yes	50 - 130 mm	108 mm	120 mm	1025 mm
601 013 011	no	003 0386 09	Yes	50 - 130 mm	108 mm	120 mm	1025 mm
601 013 041	no	003 6340 09	Yes	50- 130 mm	60 mm	100 mm	985 mm

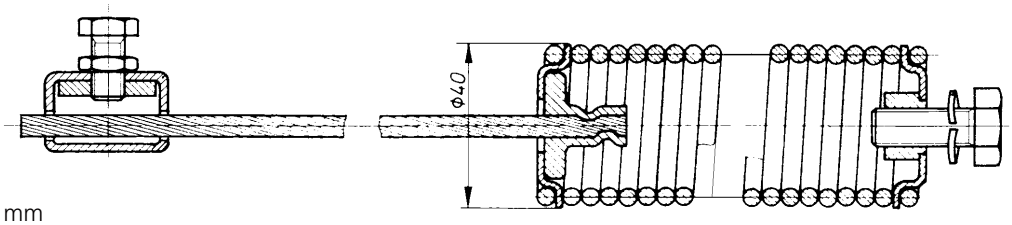

003 0380 09

Maximum mounting length: 1045 mm
Minimum mounting length: 140 mm + maximum deflection

003 0386 09

Maximum mounting length: 1025 mm
Minimum mounting length: 120 mm + maximum deflection

003 6340 09

Maximum mounting length: 985 mm
Minimum mounting length: 100 mm + maximum deflection

Pneumatic load sensing valve

Use

The automatic load sensing valve (LSV)–pneumatically controlled, is installed in vehicles (motor vehicles, trailers and articulated trailers) with pneumatic braking systems and pneumatic suspensions. The braking pressure in the pneumatic braking system, and with that the braking force, is controlled to correspond to the static load condition of the particular vehicle.

When the static load changes, the pressure in the suspension bellows changes continuously via the pneumatic suspension valve. This pressure is used to simultaneously control the connections 41, 42 of the LSV.

The effective, easily reconstructed in the workshop, pressure ratio iR = p_e1: p_e2 is the practical reference point for the adjustments.

Function

The connectors 41, 42 of the actuating cylinder are attached to the connecting lines of the pneumatic suspension valves/bellows on the right and left sides of the vehicle.

The pistons in the actuating cylinder are held in the end position when the vehicle is empty (suspension pressure empty connections 41, 42).

When the vehicle is loaded and the pressure rises at the connections 41, 42, the control pistons and the slider (1) attached to them by the connecting rod are shifted to the right which results in a change in the effective movement translation ratio.

The translation movement between the pistons and balance arm is so adjusted that with suspension pressure empty the control inlet brake pressure p_e1 at connection 1 is transferred to the outlet control pressure at connection 2 but reduced by the pressure ratio iR. The system is normally designed so that in the loaded position the controlled inlet pressure in connection 1 remains unmodified, i.e. the controlled outlet pressure at connection 2 is in 1:1 relation to it.

The LSV is fitted with a proportional control characteristic that has a start pressure control (pD) of approx. 0.4 bar in the uncontrolled range to overcome the start force (valves, wheel brakes)

The LSV works “statically”, i.e. a change in the pressure ratio, e.g. from a change in suspension pressure following a change in axle loading, is suppressed during braking.

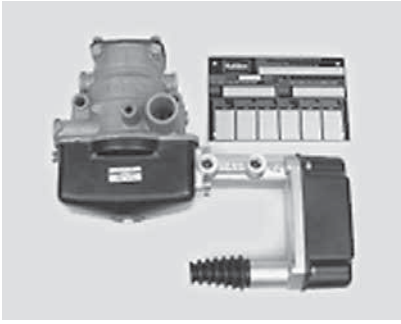

602 005 ...

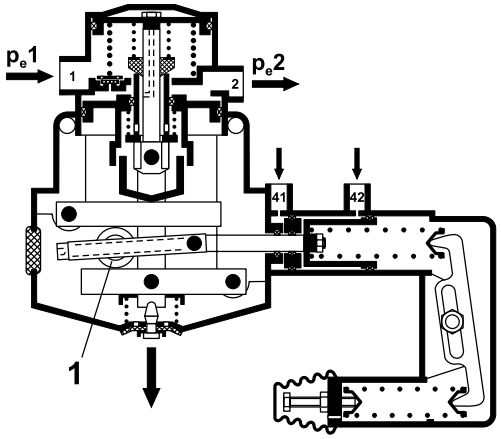

Functional diagram

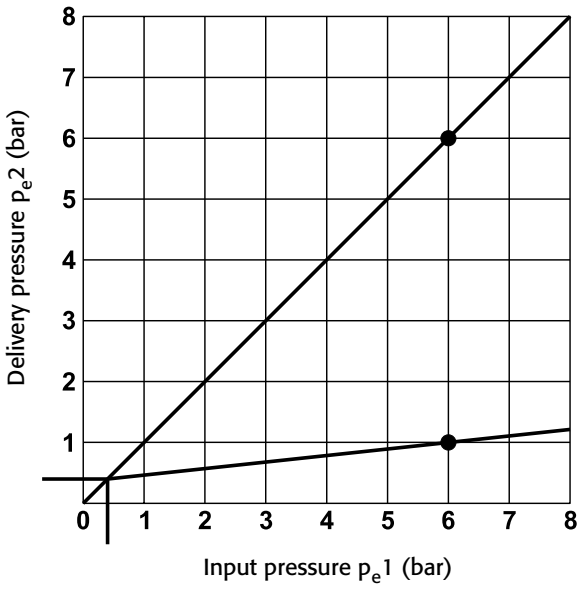

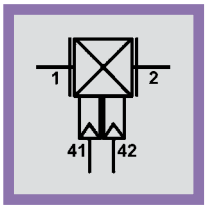

Symbol

Diagram

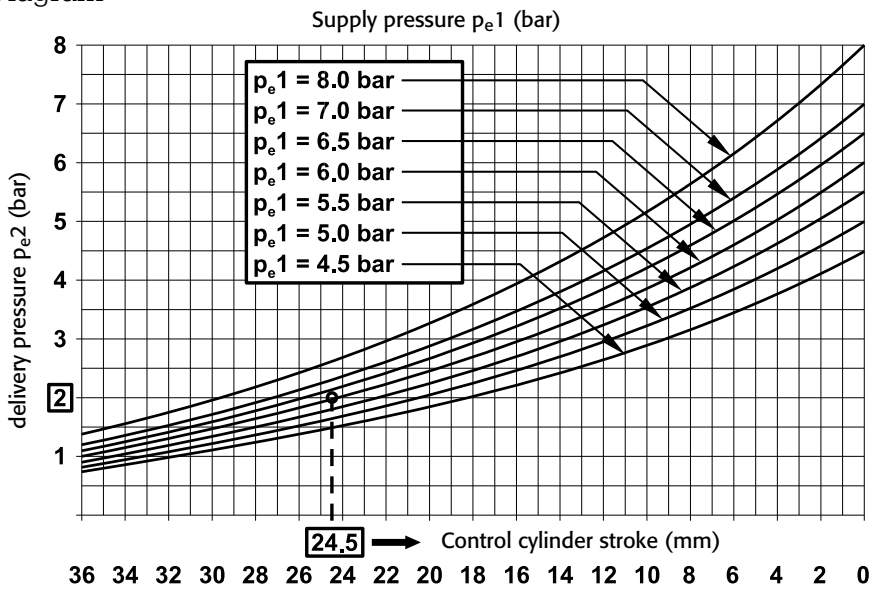

Formula for intermediate value:

$$\frac{(\text{Bagpressure laden - bagpressure unladen}) \times 36}{\text{Control cylinder stroke}}$$

Example

$$\frac{(5 - 1{,}5) \times 36}{24{,}5}$$

intermediate value = 5,14

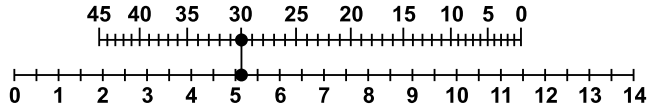

Pivot point = 30

Scale for pivot point

Setting instructions

The LSV is not set up in the factory with any particular suspension or brake pressures so these must be set by the vehicle manufacturer to the necessary values (LSV instruction plate).

The setting (diagram or LSV setting program) is made in a mechanical part and a pneumatic part.

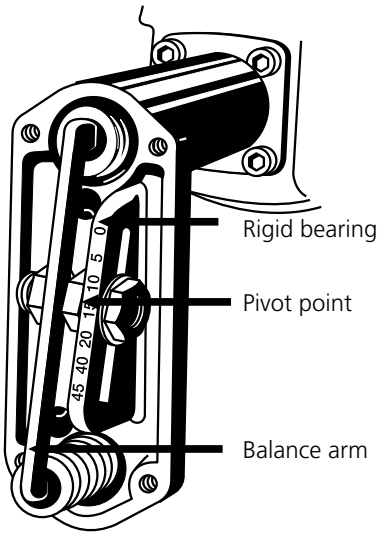

Mechanical part

Setting the pivot point (X)

1. Determine the actuating cylinder travel with the help of the diagram
2. Calculate the intermediate value with the formula
3. Determine pivot position (X) for the balance arm from the pivot scale :

Example

- p_e1 = 6.0 bar p_e2 empty = 2.0 bar. With curve p_e1 = 6.0 bar, the intersection point with p_e2 = 2.0 bar is formed, connect the intersection point with the actuating cylinder scale, giving 24.5 mm actuating cylinder travel
- Suspension pressure loaded $p_e41, 42$ = 5.0 bar, suspension pressure empty $p_e41, 42$ = 1.5 bar, gives 5.14 intermediate value
- Vertically above the value of the calculated intermediate point, the pivot position (X) can be read off the pivot scale for the balance arm, giving 30 mm pivot point.
- Set the pivot point (X) corresponding to the value determined: Remove cover G, hold both of the nuts between the balance lever and the frame with the hexagonal spanner 14 mm, loosen the locknuts on the balance lever and fixed bearing with the hexagonal spanner 17 mm and set the pivot position to the calculated value X. First tighten the nuts on the fixed bearing, set up the balance arm (centrally between the return springs for the 90° - position to the long axis of the LSV; if necessary, remove any pre-tensioning in the return springs by turning the adjustment screw F to the left), tighten the nuts 17 mm on the balance lever with about 12-13 Nm torque.

Pneumatic part

Setting the outlet pressure p_e2 empty:

- Vent connections 1, 41, 42 to p_e = 0 bar.
- Remove the rubber cap A.
- Place the hexagonal key 5 mm into screw B, shift the slider C against the force of the spring and see whether the automatic return takes place. If it does not return: remove bellows D, loosen locknut E, pre-tension the springs using screw F till the slider C returns to the starting position.
- Turn the screw B so that when controlling the inlet brake pressure p_e1 at Port 1, the desired outlet pressure p_e2 empty is controlled at Port 2. Port 1 has to be vented to p_e1 = 0 bar before the screw B is adjusted.
  Turn to the left at B raises p_e2
  Turn to the right at B lowers p_e2
- Vent Port 1 to p_e1 = 0 bar. Control suspension pressure to $p_e41, 42$ empty in actuating cylinder.
- Control brake pressure p_e1 at Port 1, the outlet pressure p_e2 empty must correspond to the previously set value. If the outlet pressure p_e2 empty is greater; again tension the return spring in the actuating cylinder using screw F till, when controlling p_e1, the desired outlet pressure p_e2 empty is achieved (do not tension too much).
- Vent Port 1 to p_e1 = 0 bar, raise suspension pressure $p_e41, 42$ empty by approx. 0.7 bar, control brake pressure p_e1 at

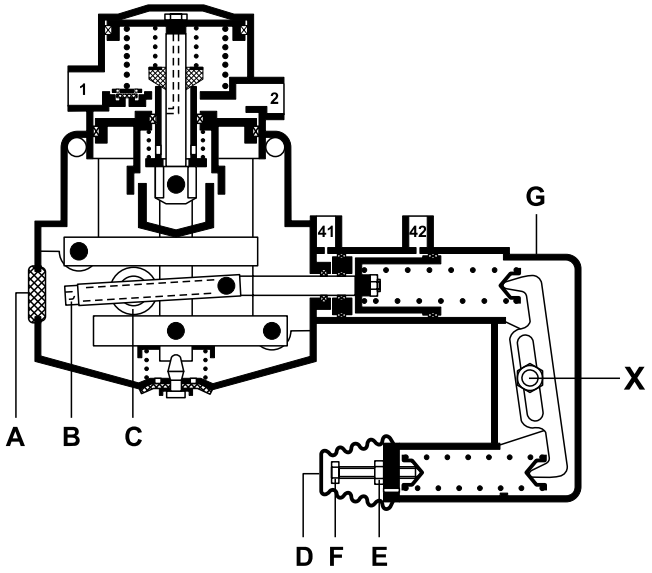

Balance level correct in the fix the middle position

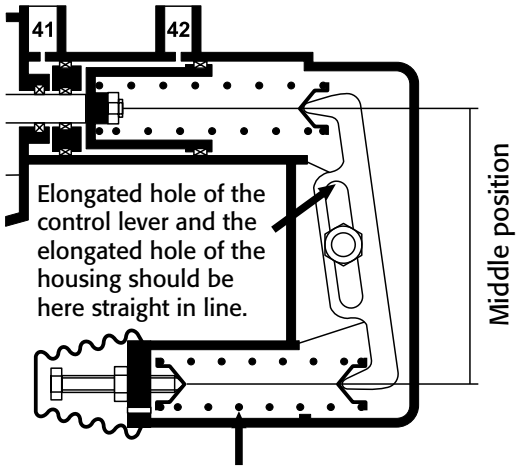

Return spring

Port 1, the pressure controlled at Port 2 must now be very slightly greater than p_e2 empty. If a higher pressure is not achieved then the pretension of the return spring is too great. To correct this, loosen the adjustment screw F till the desired change in outlet pressure is obtained (do not lower the spring tension too much, examine p_e2 empty again as a check), tighten locknut E.

- Replace rubber cap A and bellows D as well as protective cover G. Check outlet pressure p_e2 loaded:
- Control the suspension pressure in the actuator cylinder to $p_e41, 42$ loaded, control the brake pressure p_e1 at Port 1, the outlet pressure p_e2 must correspond to the value on the LSV instruction plate, the brake calculation or the value given by the vehicle or axle manufacturer, usually $p_e1 = p_e2$.

Installation

The LSV is fixed to the vehicle chassis with two M 8 bolts. The vent must point downwards. The pneumatic lines have to be connected according to the Port markings 1, 2, 41, 42.

The values of the settings have to be stamped on the accompanying LSV information plate Part. No. 028 0280 09. The information plate must not be capable of becoming detached and must be attached to the vehicle where it is easily visible (German road traffic licensing regulation: StVZO - SP - Rili. - 2.5).

Testing

- Function and leak test
- Check that p_e2 empty and p_e1 loaded correspond to the data on the LSV instruction plate.
- It is mandatory that the LSV be so mounted that it is in a vertical position and the vent point downwards during examination and adjustment Simulation connection
- Variable installation (good access)
- Makes it possible to test to EG/ECE as well as the German § 29 StVZO
  11 = Air IN (bellows)
  12 = Air IN (filling connection)
  2 = Air OUT (LSV 41/42)

Technical Data

Operating pressure:	p_e max 10 bar
Operating temperature range:	- 40°C to + 80°C
Ports:	1, 2: M 16 x 1.5
41, 42:	M 12 x 1.5
Port markings:	1 = Service Brake Air IN 2 = Service Brake Air OUT 41 = Air Suspension Control connection 1 42 = Air Suspension Control connection 2

Versions

602 005 001	Load Sensing Valve

Accessories

028 0280 09	Data plate
318 072 001	Simulation connection
000	Diskette, LSV adjustment program



318 072 001 Simulating connection

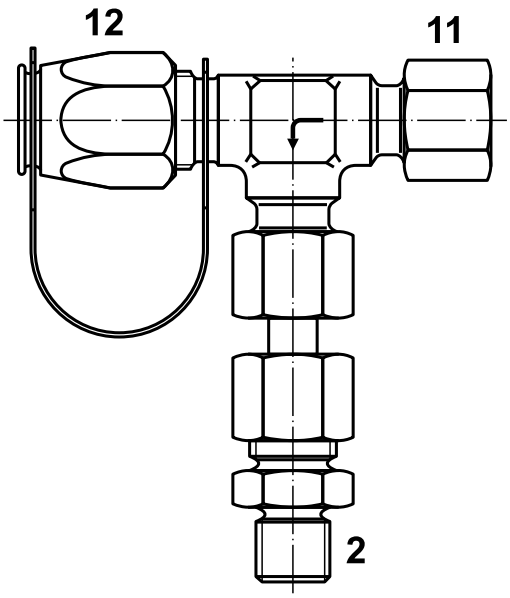

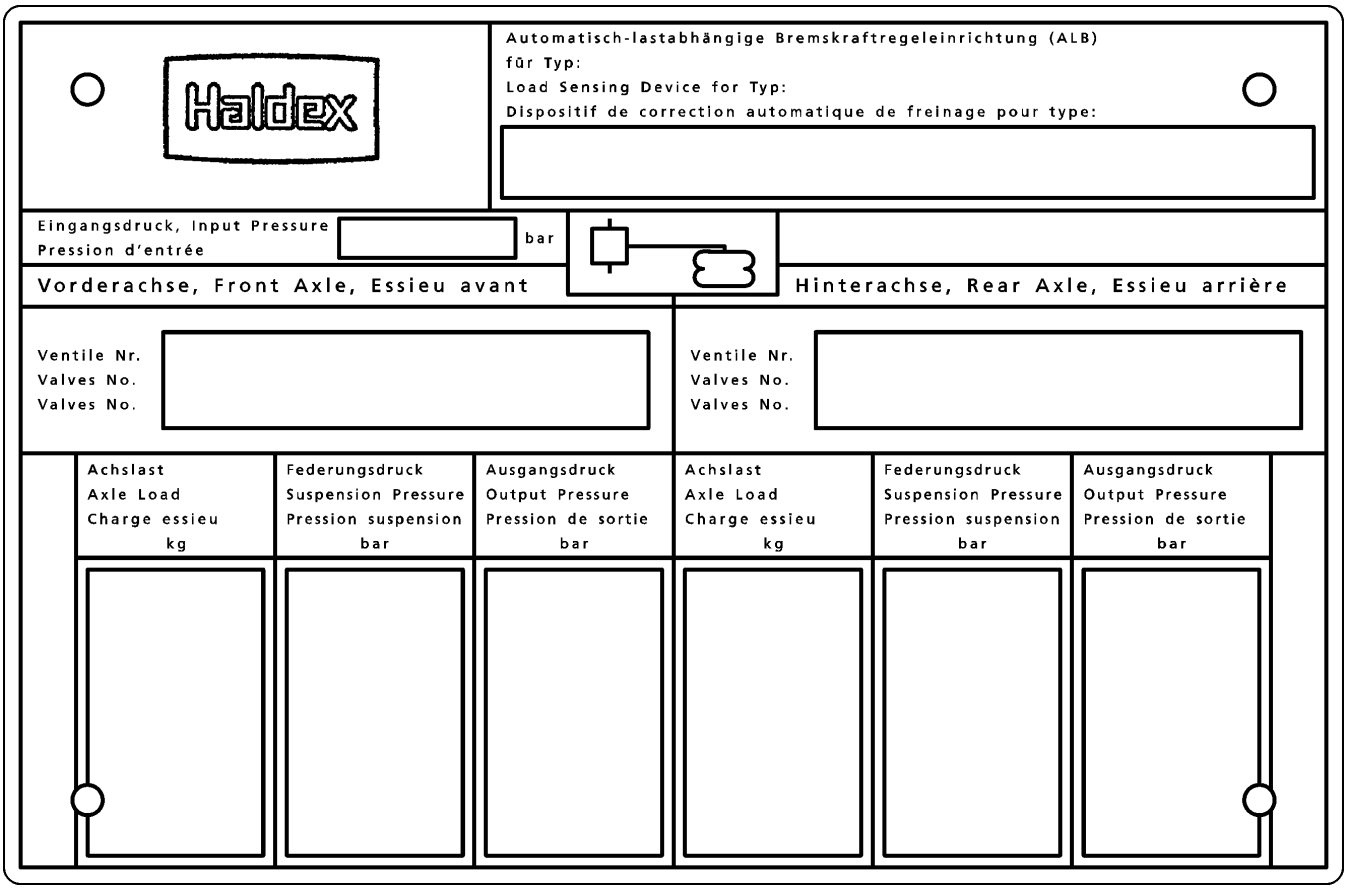

028 0280 09 LSV - data plate

Electronic braking system



Gen3 Standard: 823 008 XXX

System overview

The EB+ Gen3 system provides electro-pneumatic control of the trailer brakes for full, semi and centre-axle trailers with built in electronic load sensing and anti-lock functions. It provides the necessary components to enable compatibility with either an electronically and pneumatically signalled or a pneumatically only signalled towing vehicle.

In addition to normal service brake control, EB+ Gen3 also contains a roll stability system. This uses a lateral accelerometer, in addition to the existing sensed variables, to determine if the vehicle is close to its roll threshold. Low-level brake test pulses are also used as part of the detection process and automatically commanded braking is used to slow the vehicle below the roll threshold. The accelerometer may be external or internal to the ECU.

As well as providing the means for brake control the controller also contains auxiliary channels capable of providing ancillary functions, such as reset-to-ride height and a power / diagnostic link for use by other systems. The main system package consists of an electronic control unit (ECU) / modulator assembly, containing a brake apply solenoid, twin solenoid operated relay valve(s) and pressure sensors for monitoring the pneumatic control line, brake delivery, reservoir and air suspension pressure.

Externally the system comprises two or four wheel speed sensors and optionally a pressure sensor sensing the pneumatic control transmission. When used the pressure sensor should be situated before an emergency valve (REV or EV) if fitted.

Trailers fitted with the system may only be towed behind vehicles fitted with an ISO 7638 connector (either 7 or 5-pin). When connected with a 7-pin connector the system receives brake demand data via the CAN data line in accordance with ISO 11992. When connected with a 5-pin connector the system determines brake demand by sensing the pneumatic control transmission.

Optionally an ISO 1185 (24N) or ISO 12098 (15 pole) stop light power back-up connection can be fitted. This provides anti-lock braking control and optionally dynamic load sensing in situations where the ISO 7638 connection is not functioning and is not intended as a normal operating mode. The apportionment of braking under varying vehicle load conditions is implemented in software. The load sensing parameters, from the brake calculation, are programmed into the ECU using the system diagnostic link.

Product versions

There are two versions of EB+ Gen3, a Standard version offering 4-2S / 2M with Super AUX, a Premium version offering up to 4S / 3M with Super AUX and additional auxiliary input / output capability.

Feature	Standard	Premium
Wheel speed sensors	2 or 4	2 or 4
Modulators	2	2 or 3
Auxiliary inputs	2 analogue, 3 digital	2 analogue, 5 digital
Auxiliary outputs	3 outputs, 1 tacho	5 outputs, 1 tacho
Super AUX	Yes	Yes
Roll-over control	Yes	Yes
Auxiliary power extension	No	Yes
Haldex CAN-Bus	Yes	Yes
Power supply	8–32 V	8–32 V
Stop-lamp backup power	Yes	Yes

EB+ Gen3 Standard [2M]

Independent EBS for semi and centre axle trailers. EB+ Gen3 2M, 2 modulators, 4 sensors, multiple auxiliary connections, integrated stability, maximum flexibility. EB+ Gen3 Standard is a 12 / 24 V EBS with integrated roll-over control, intended for fitment to semi and centre axle trailers using full air braking systems with air / mechanical suspension.

Benefits:

- Easy, logical vehicle installation
- Multi-voltage operation
- Integrated stability control
- Multiple auxiliary connections allow several devices to be fitted
- Functions and capabilities are upgradeable by software for longer operational life
- Connect multiple CAN devices, e.g. TPMS, Info Centre or telematics

Specifications:

- Integrated quick release valve
- Integrated anti-compound valve
- Service brake test ports
- ECU operates 8 - 32V
- EMC / RFI approved
- Reservoir M22 ports
- Valve integrated with electronic load sensing and roll-over control
- Delivery and suspension M16 ports
- External connections via up to 13 moulded plugs
- Plastic enclosure
- Dual reservoir connections

EB+ Gen3 Premium [2M or 3M]

Independent EBS for full, semi and centre axle trailers. An EB+ Gen3 3M system is possible, consisting of a Gen3 2M Master and a 1M Slave (3 modulators in total), 4 sensors, more auxiliary connections than standard, integrated stability, maximum flexibility. EB+ Gen3 Premium is a 12 / 24V EBS with integrated roll-over control, intended for fitment to full, semi and centre axle trailers using full air braking systems with air / mechanical suspension. A top of the range configuration delivers EBS braking with integrated ABS, electronic load-sensing, multiple CAN, 3 modulator configuration, a range of other inputs / outputs to control other functions and now with stop lamp power backup.



Gen3 Master assembly 823 034 xxx

Benefits:

- Easy, logical vehicle installation
- Multi-voltage operation
- Flexibility, with up to 5 input / output channels, 2 dedicated analogue channels and 3 dedicated digital inputs
- Load sensing for both Master and Slave to optimise brake efficiency and wear
- Connect multiple CAN devices, e.g. TPMS, Info Centre or telematics.



Gen3 Slave assembly 810 023 001

Specifications:

- Integrated quick release valve
- Integrated anti-compound valve
- Service brake test ports
- ECU operates 8-32V
- EMC / RFI approved
- Reservoir M22 ports
- Valve integrated with electronic load sensing and roll-over control
- Delivery and suspension M16 ports
- External connections via up to 14 moulded plugs
- Reservoir connections: 2 x Master, 1 x Slave

General components – 2M: Example only(customer preference)



ISO 7638 7-pin socket assembly



Sensor and exciter (fitted as required)



EB+ Gen3 2M assembly



ISO 12098 / ISO 1185 (24N) connector

Example only (customers preference)



Driver's information plate (customers preference)



EB+ Info Centre

(artists impression of layout)

Option 1



TrCM+

Option 2



TEM®

Option 3



Relay Emergency Valve (REV)



Park and shunt valve

2M- chassis components

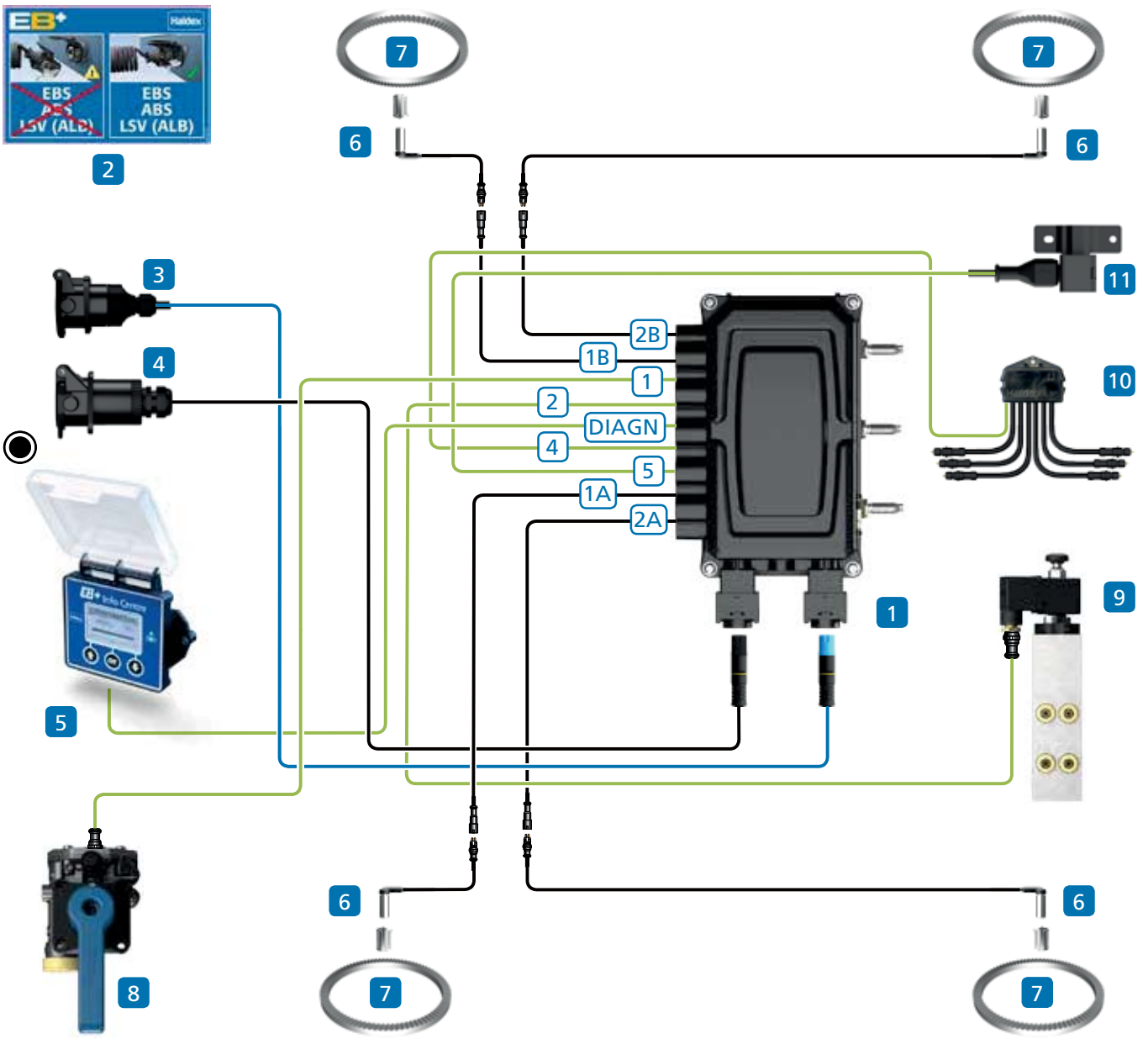

Item	Description	Notes
1	EB+ Gen3 assembly	Standard version shown
2	EB+ label	
3	ISO 7638 7-pin socket assembly	
4	ISO 12098 / ISO 1185 (24N)	Optional safety back up cable
5	EB+ Info Centre	
6	Sensor assembly	
7	Exciter	
8	COLAS+®	Programmable via DIAG+
9	ILAS®-E	Programmable via DIAG+
10	Lining Wear System (LWS)	Programmable via DIAG+
11	EB+ external stability sensor	Programmable via DIAG+

General components – 3M (Simplified overview)

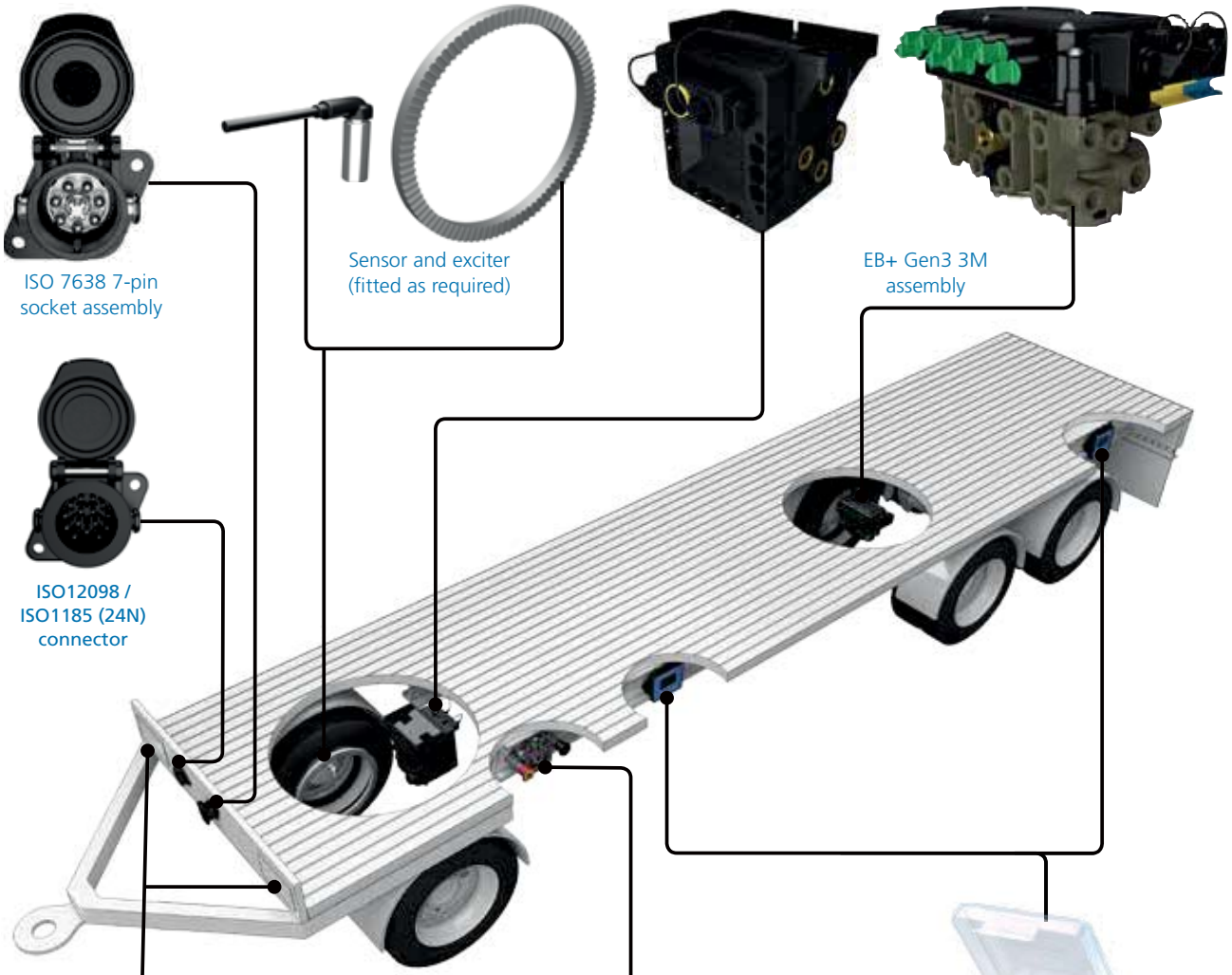

Option 1	Option 2	Option 3	
			
TrCM+	TEM®	Relay Emergency Valve (REV)	Park and shunt valve

3M-chassis components

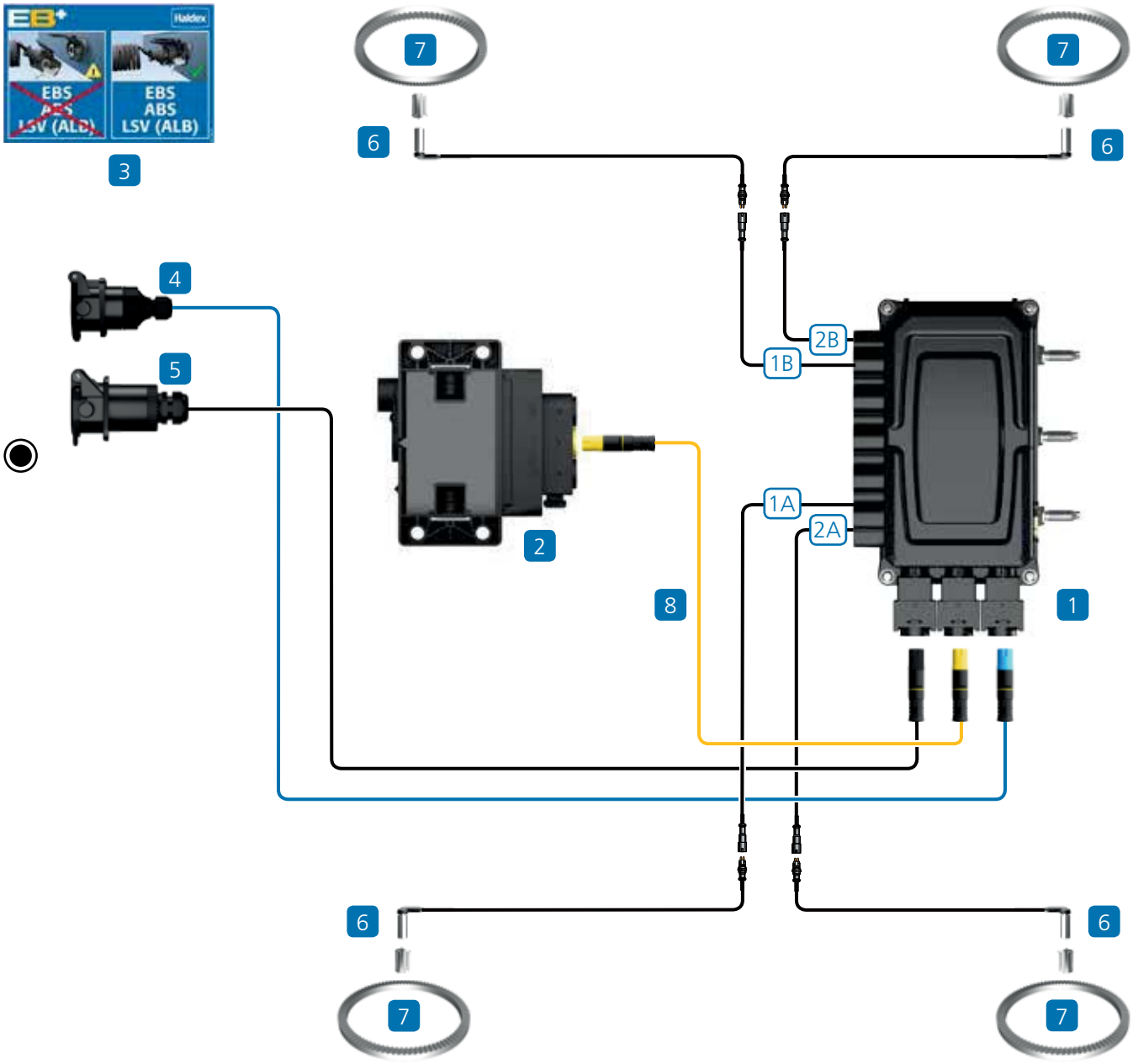

Item	Description	Notes
1	EB+ Gen3 assembly	Premium version shown
2	Slave assembly	
3	EB+ label	
4	ISO 7638 7-pin socket assembly	
5	ISO 12098 / ISO 1185 (24N)	Optional safety back up cable
6	Sensor assembly	
7	Exciter	
8	3M link cable	

Dimension and port identification

Standard-Assembly

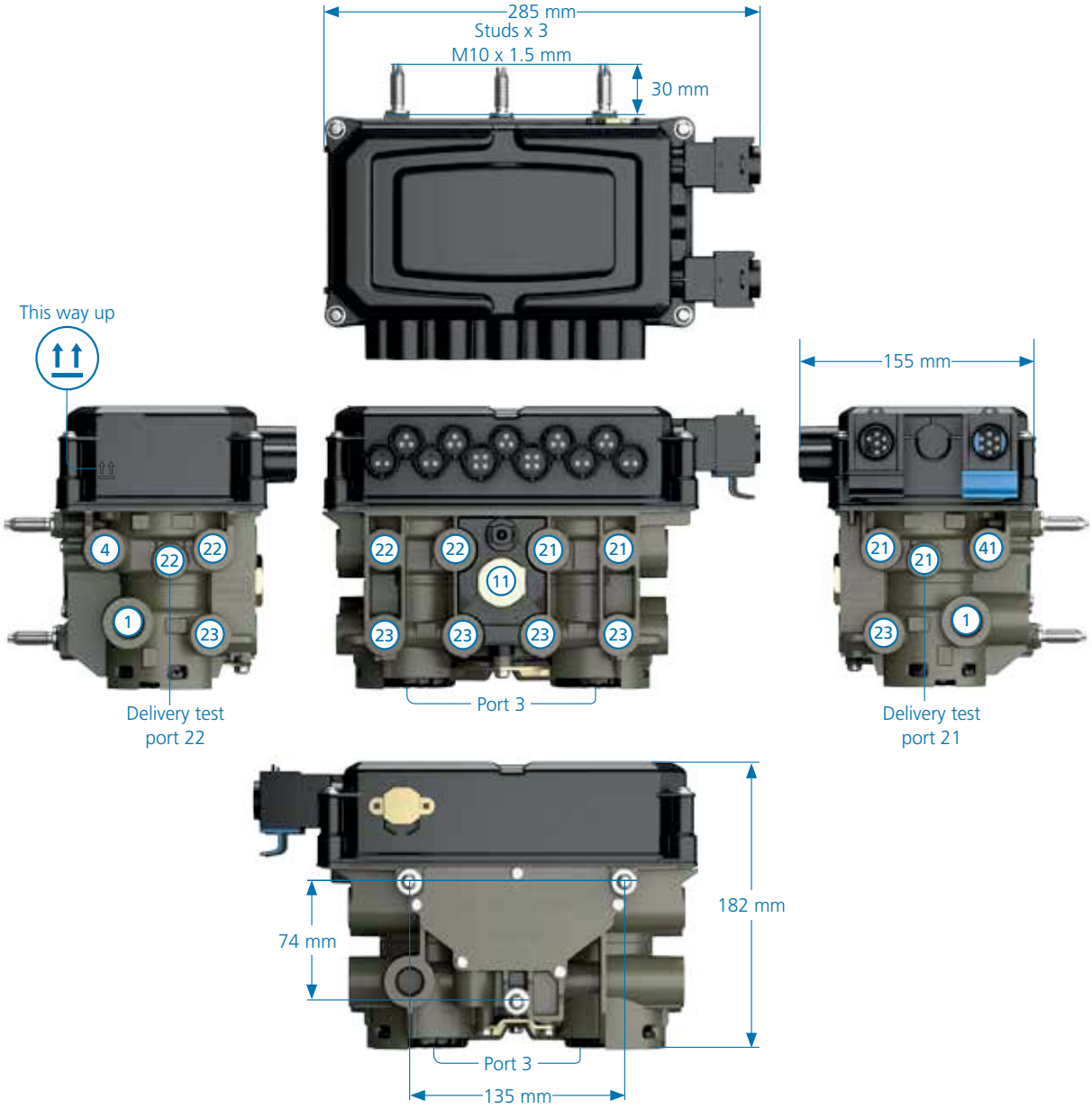

Approximate mass of assembly: 5.75 Kg

Port	Description	Notes
1	Reservoir port	M22 x 1.5 mm
3	Exhaust port	
4	Control port	M16 x 1.5 mm
11	Anti - compounding port	M16 x 1.5 mm
21/22	Delivery ports	M16 x 1.5 mm
21/22	Test point port	M12 x 1.5 mm
23	Spring brake port	M16 x 1.5 mm
41	Air suspension port	M16 x 1.5 mm

Premium-assembly

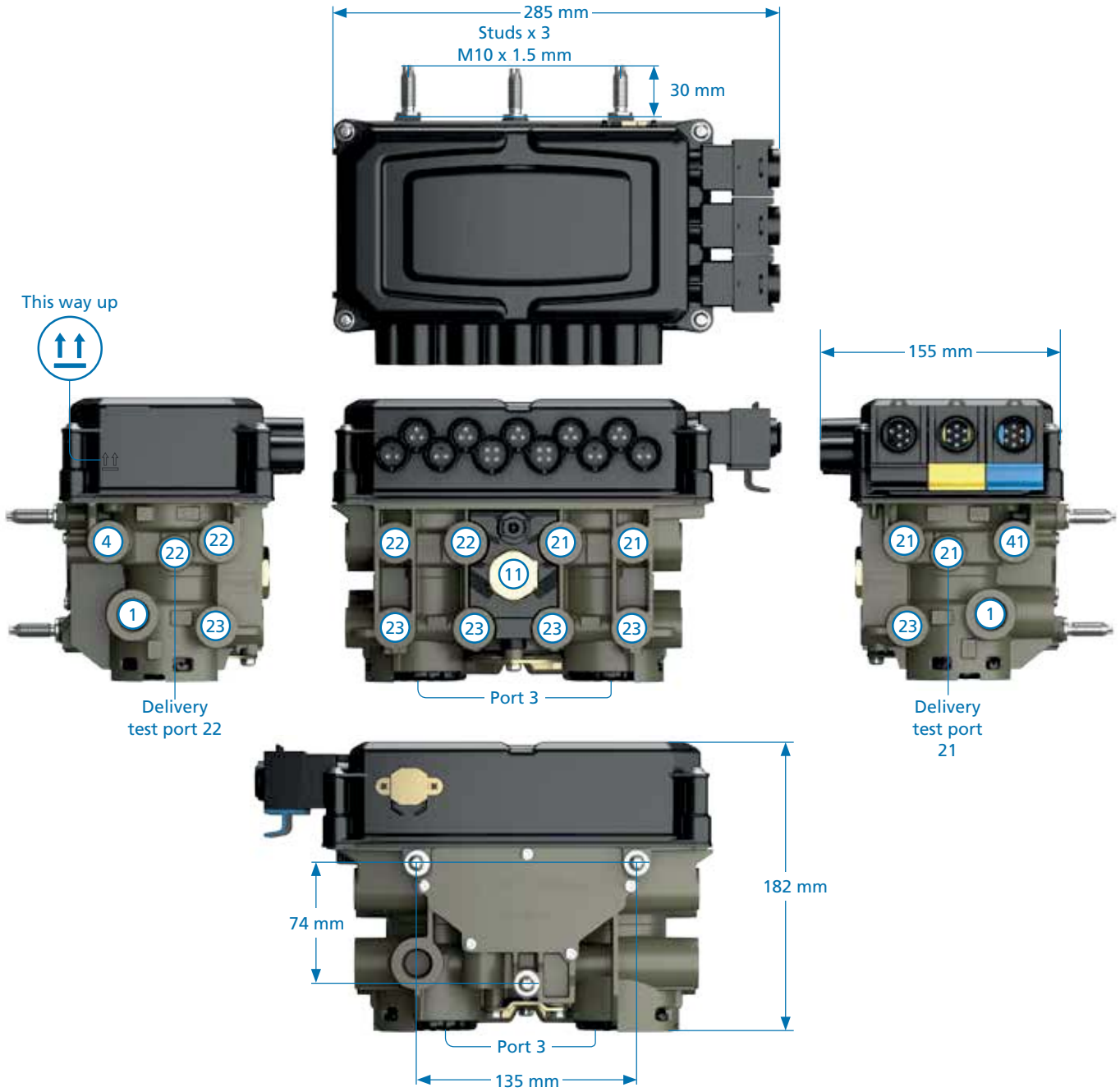

Approximate mass of assembly: 5.75 Kg

Port	Description	Notes
1	Reservoir port	M22 x 1.5 mm
3	Exhaust port	
4	Control port	M16 x 1.5 mm
11	Anti - compounding port	M16 x 1.5 mm
21/22	Delivery ports	M16 x 1.5 mm
21/22	Test point port	M12 x 1.5 mm
23	Spring brake port	M16 x 1.5 mm
41	Air suspension port	M16 x 1.5 mm

Slave assembly



Note:

The EB+ Gen3 Slave assembly (ECU & valve) is only supplied as one complete unit that cannot / should not be separated.

Approximate mass of assembly: 3.2 Kg

Port	Description	Notes
1	Reservoir port	M22 x 1.5 mm
2	Delivery ports	M16 x 1.5 mm
3	Exhaust port	-
4	Control port	M16 x 1.5 mm
41	Air suspension port	M16 x 1.5 mm

System configurations

Semi & centre axle trailers - side by side (SxS)

2S / 2M

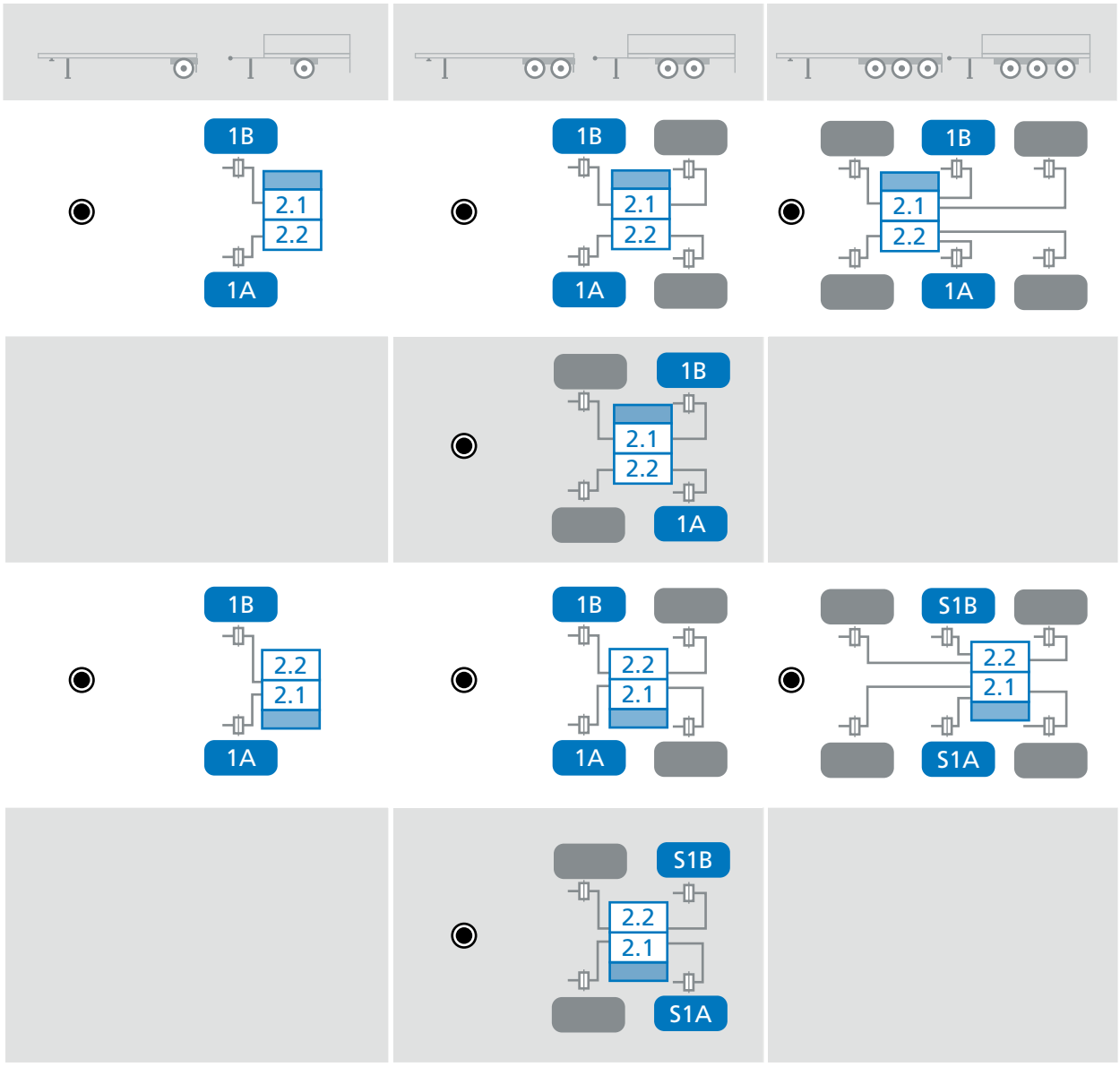

Notes:

- Any axle without directly controlled wheels may be a lift axle
- Any axle may be a steered axle

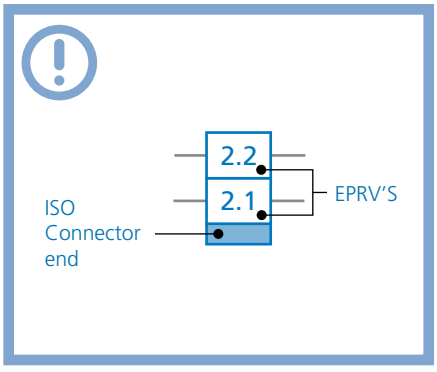

Semi & centre axle trailers - side by side (SxS)

4S / 2M

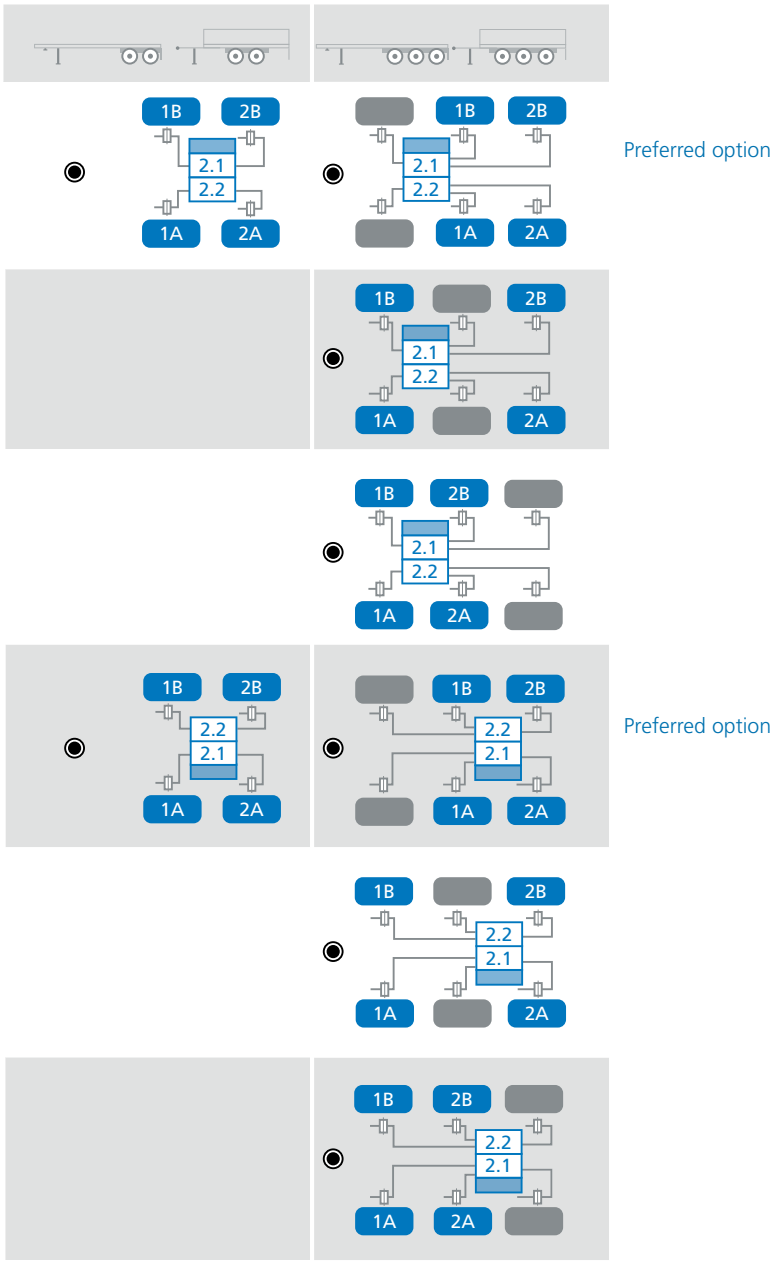

Notes:

- Any axle without directly controlled wheels may be a lift axle
- Any axle may be a steered axle

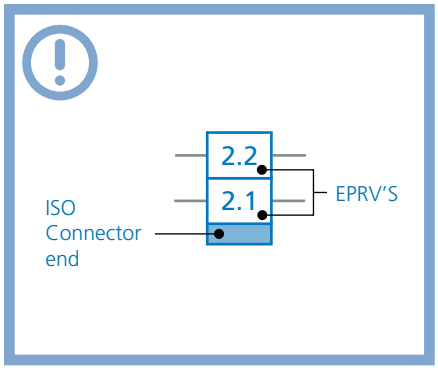

Semi & centre axle trailers

4S / 3M

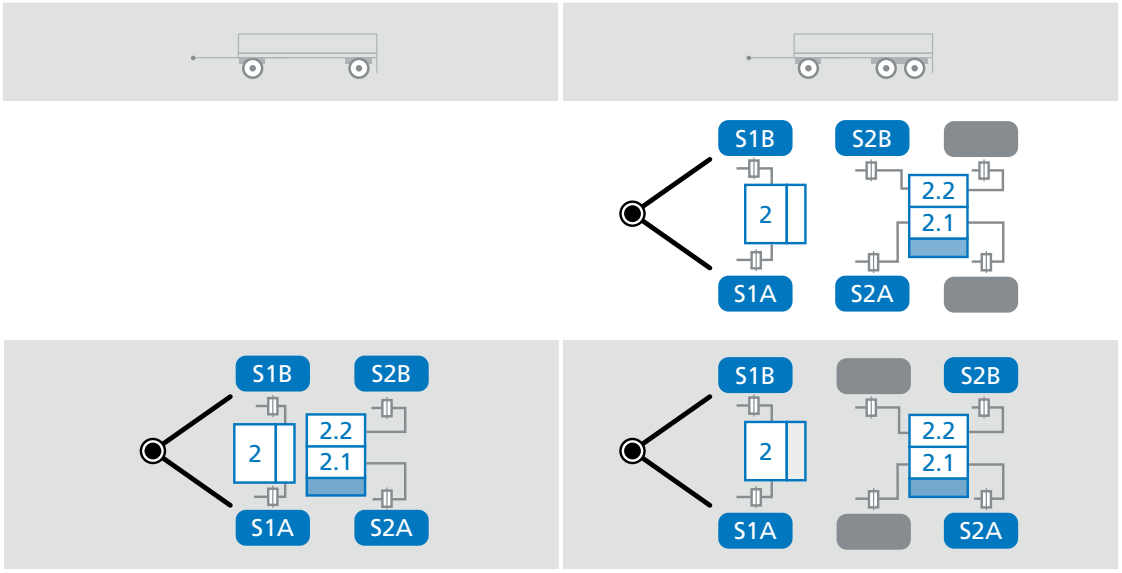

4S / 3M

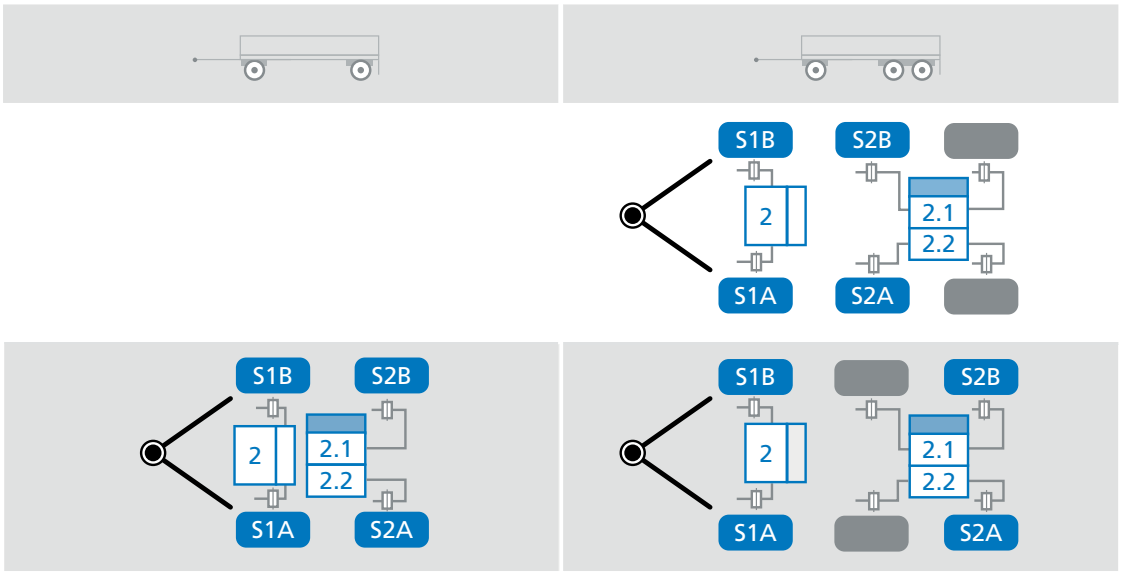

Notes:

- Sensed axles cannot be lifted
- Any axle without directly controlled wheels may be a lifted
- N1 Master ECU is mounted to EPRV's 21/22. All sensors must be connected to this Master ECU
- N2 Slave ECU is mounted to EPRV 2 and is controlled by Master ECU.Slave ECU / EPRV 2 is shown facing rear but can also be installed facing forward, left or right, as EPRV 2 is always select low control

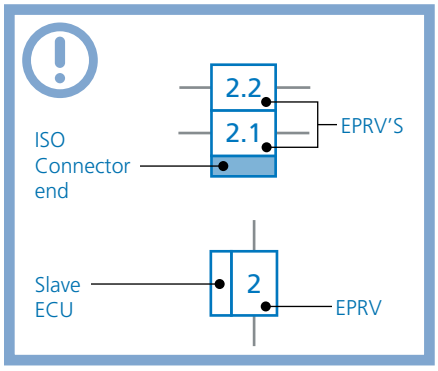

Part reference

EB+ Gen3 electronic control unit (ECU)	2M	3M	DCV	QRV	STAB	S AUX	P AUX
823 008 xxx	✔		✔	✔	✔	✔	
823 034 xxx	✔	✔	✔	✔	✔	✔	✔
950 823 008	✔		✔	✔	✔	✔	
950 823 034	✔	✔	✔	✔	✔	✔	✔



EB+ Gen3 1M Slave	Part number
Gen3 1M Slave	810 023 001



The EB+ Gen3 Slave assembly (ECU + valve) is only supplied as one complete unit that cannot / should not be separated.

EB+ Gen3 label	Part number
EB+ label	028 5262 09



Sensor kit	Part number
Angled (inc. retaining clip)	950 364 503
Straight (inc. retaining clip)	950 364 506



EB+ Info Centre	Part number
EB+ Info Centre	815 041 001
EB+ Info Centre ADR	815 046 001





ACTUATION



Brake chamber	116
Double diaphragm spring brake - Blue Seal	128
Piston cylinder	132
Automatic brake adjuster	135

Brake chamber

Use

The brake chamber is installed to generate the actuation force for mechanically-operated wheel brakes.

Long-stroke brake chambers have a longer actuation stroke and consequently the advantage that in conjunction with automatic brake adjusters, they cover the larger stroke requirement for the adjustment cycle (or in the case of manual brake adjusters, the time intervals for adjustment can be made longer).

Function

The two housing halves are sealed against each other by the diaphragm and clamped together by a retaining strap.

When air is admitted to the compression space, the diaphragm pushes the piston and push rod out of the cylinder, against the spring force. The yoke mounted on the piston rod transfers the force to the brake adjuster. The piston space is connected to atmosphere through a port.

When the brake is released, the air in the pressure space is exhausted. The brake arm, supported by the spring, pushes the piston rod, piston and diaphragm back to the floor of the housing.

Installation

The brake chamber is mounted on a carrier plate fitted to the axle, or the vehicle frame. The installation location must be chosen so that water cannot enter the chamber (ice formation). The lowest of the four pressure equalisation ports drilled around the circumference must not be blanked off.

In order to obtain good mechanical efficiency, the piston rod must be at right angles to the brake arm when at half-stroke. When the brake is correctly adjusted, the piston stroke should be no more than 1/3 to 1/2 of the total stroke at full braking. In the released position, the piston rod with the piston must rest against the diaphragm, which in turn should rest against the cylinder end. If the mechanical parking brake is connected to the slack adjuster, elongated-hole yokes, e.g. 003 0336 09, should be used. This avoids the piston rod being pulled out of the cylinder when the parking brake is applied. Installation dimensions are given on the installation drawings.





120 / 123 ... ...

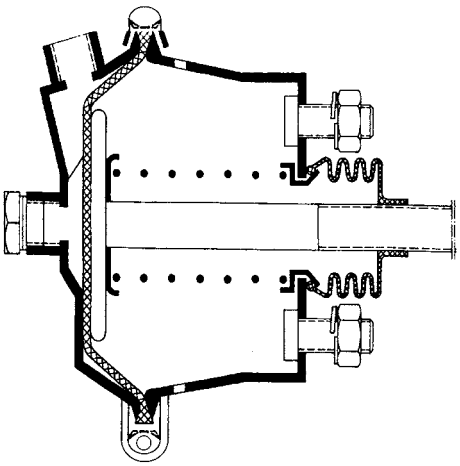

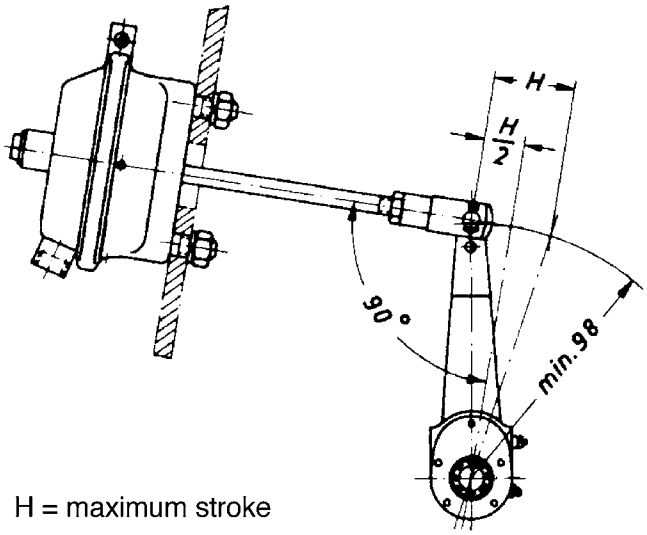

H = maximum stroke

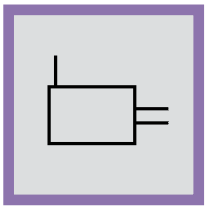

Symbol

Testing

- Check the bellows (if fitted) for damage and replace as necessary
- Check the brake chamber response pressure: max. p_e = 0.5 bar max
- Check the stroke is correctly set: The piston stroke at full braking should be some 1/3 to 1/2 of the total stroke.
  If the stroke at full braking is longer than 1/2 of the possible stroke, the brake must be adjusted (this does not apply to automatic slack adjusters; however, these must be checked for operation and their basic setting)
- After releasing check the brake to see whether the piston rod has returned completely

Technical data

Service temperature: -40°C to +80°C

Service pressure: p_e max. 10 bar

Certificate for brake chamber

type 9 to type 36: BC 0094.0 to BC 0100.0

Swivel range for plunger rod is 3° all round.

The diaphragm is guaranteed to return to its initial position within the stated temperature range.

Find further information on www.haldex.com/trailer-application-guide

Versions

Part number	Type	Stroke	Piston rod thread	Piston rod thread	Seal	Central fork head	Side port	Port	Vent plug	Operating pressure	Lock nut
123 090 001	9	60	185mm	M 16x 1,5	Air bellows	without		M 16 x 1,5	with	8 bar	with
123 120 002	12	60	185mm	M 16x 1,5	Air bellows	without	M 16 X 1,5	M 16 X 1,5	with	8 bar	with
123 160 001	16	80	185mm	M 16x 1,5	Disc	without	M 16 x 1,5	M 16 x 1,5	with	8 bar	with
123 160 002	16	80	185mm	M 16x 1,5	Air bellows	without	M 16 x 1,5	M 16 x 1,5	with	8 bar	with
123 200 001	20	76	185mm	M 16 x 1,5	Disc	without	M 16 X 1,5	M 16 X 1,5	with	8 bar	with
123 200 002	20	76	185mm	M 16 x 1,5	Air bellows	without	M 16 X 1,5	M 16 X 1,5	with	8 bar	with
123 200 003	20	76	210	M 16 x 1,5	Disc	without	M 16 x 1,5	M 16 X 1,5	with	8 bar	with
123 240 001	24	80	185	M 16 x 1,5	Disc	without	M 16 X 1,5	M 16 X 1,5 1	with	8 bar	with
123 240 002	24	80	185	M 16 x 1,5	Air bellows	without	M 16 X 1,5	M 16 X 1,5	with	8 bar	with
123 240 003	24	80	210	M 16 x 1,5	Disc	without	M 16 X 1,5	M 16 X 1,5	with	8 bar	with
123 240 004	24	80	148	M 16 x 1,5	Disc	without	M 16 X 1,5	M 16 X 1,5	with	8 bar	with
123 300 001	30	80	185	M 16 x 1,5	Disc	without	M 16 X 1,5	M 16 X 1,5	with	8 bar	with
123 300 002	30	80	185	M 16 x 1,5	Air bellows	without	M 16 X 1,5	M 16 X 1,5	with	8 bar	with
123 300 003	30	80	210	M 16 x 1,5	Disc	without	M 16 X 1,5	M 16 X 1,5	with	8 bar	with
120 366 201	30	75	187	M 16 x 1,5	Disc	without		M 16 X 1,5	with	8 bar	with
123 360 004	36	75	60	M 16 x 1,5	Air bellows	without		M 16 X 1,5	with	8 bar	with
120 376 102	36	75	192	M 16 x 1,5	Air bellows	without		M 16 X 1,5	with	8 bar	with

Available yokes

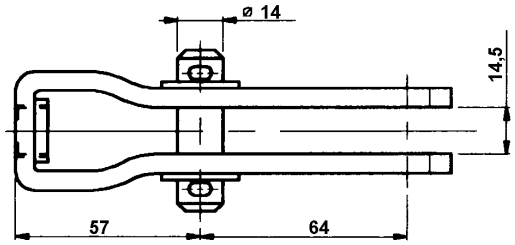

003 0336 09

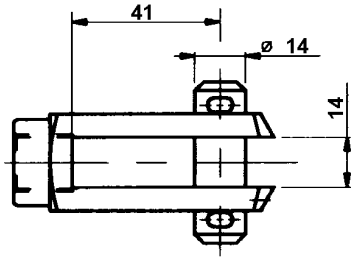

003 5614 09

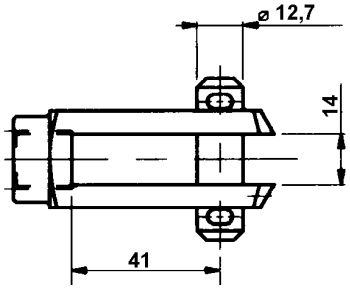

003 5685 09

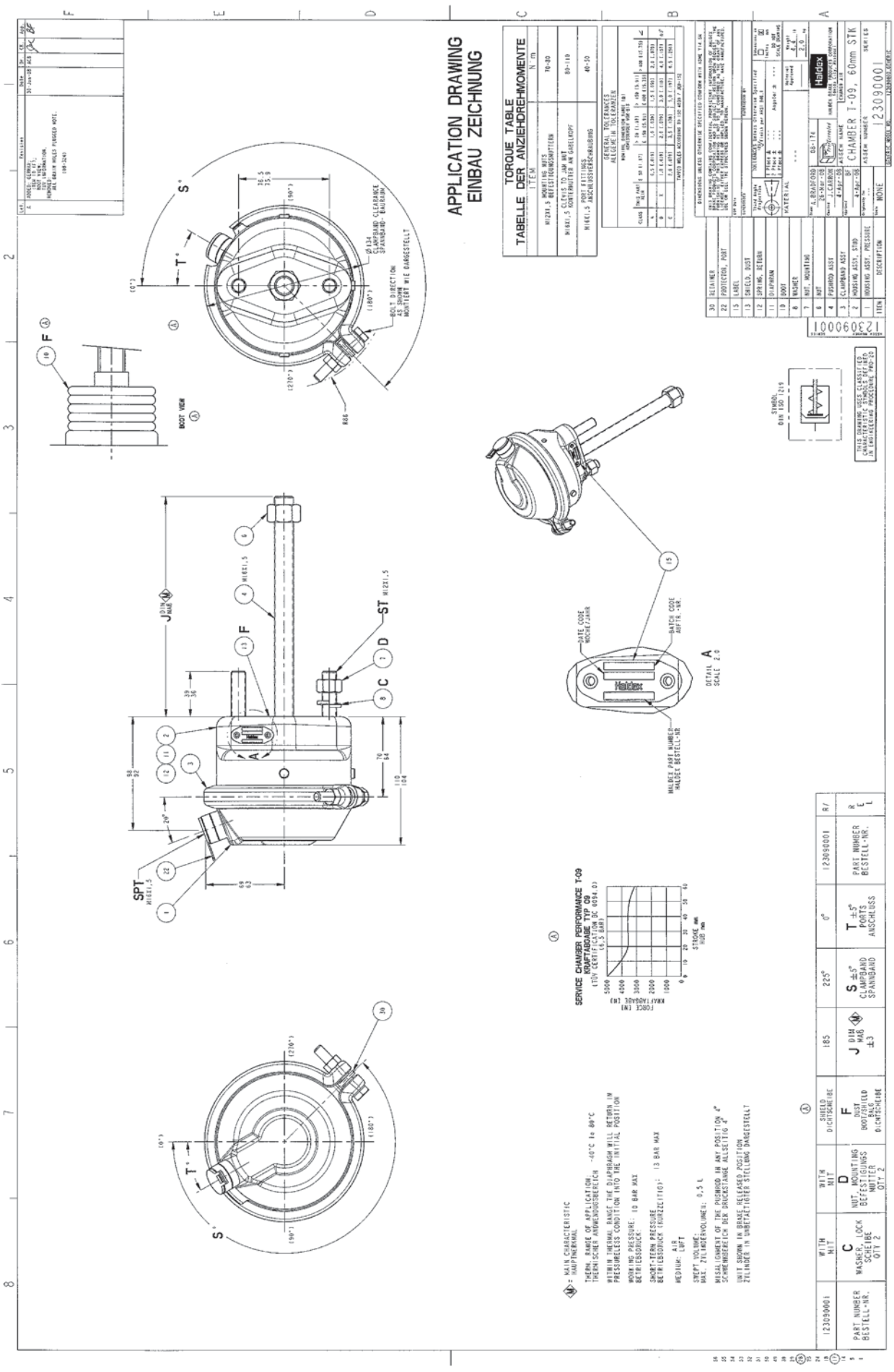
APPLICATION DRAWING
EINBAU ZEICHNUNG
TORQUE TABLE
TABELLE DER ANZIEHDREHMOMENTE
SERVICE CHAMBER PERFORMANCE T-09
KRAFTABGABE TYP 09
CHAMBER T-09, 60mm STK
123090001

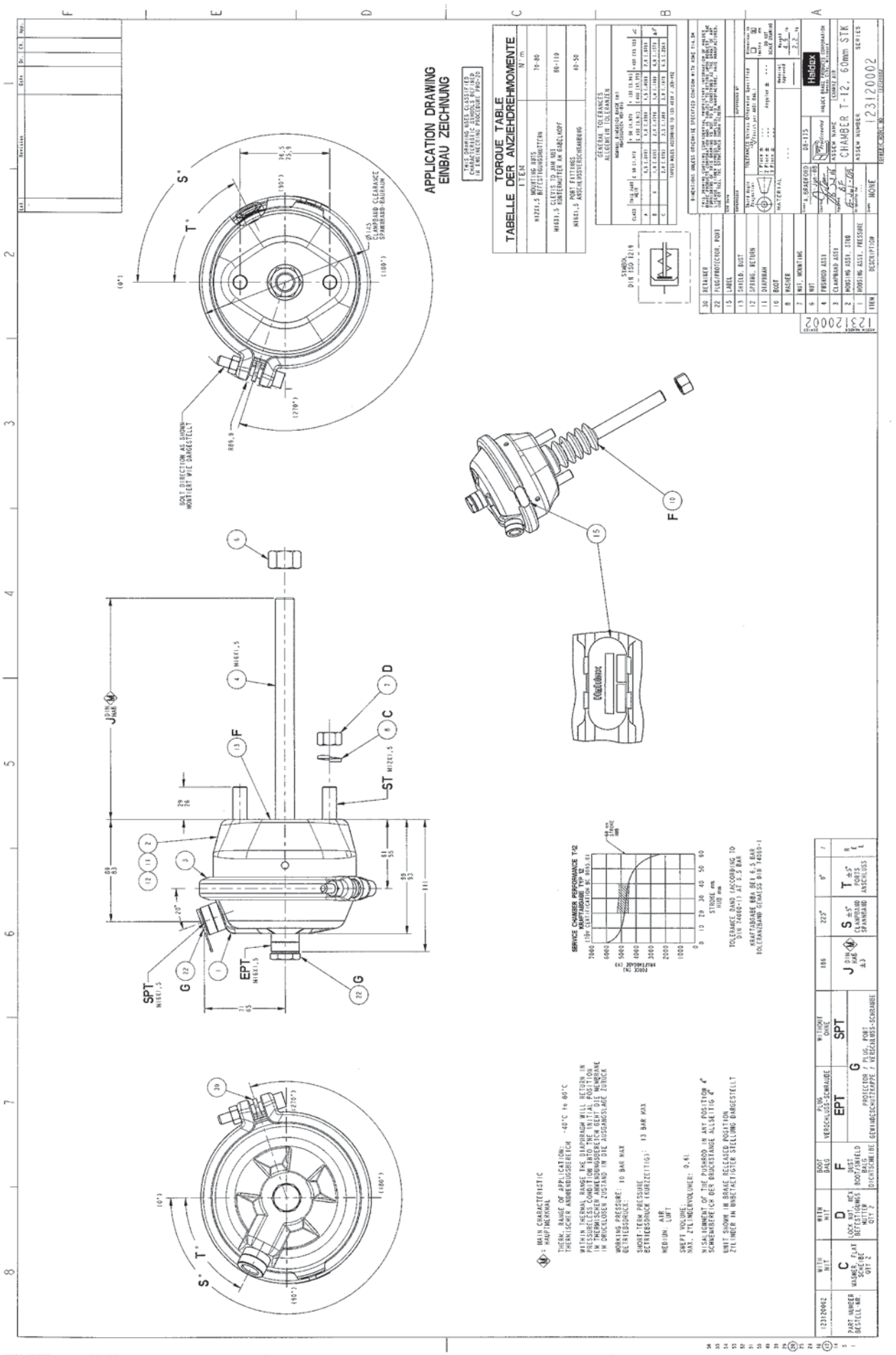
APPLICATION DRAWING
EINBAU ZEICHNUNG
TORQUE TABLE
TABELLE DER ANZIEHDREHMOMENTE
CHAMBER T-12, 60mm STK
123120002

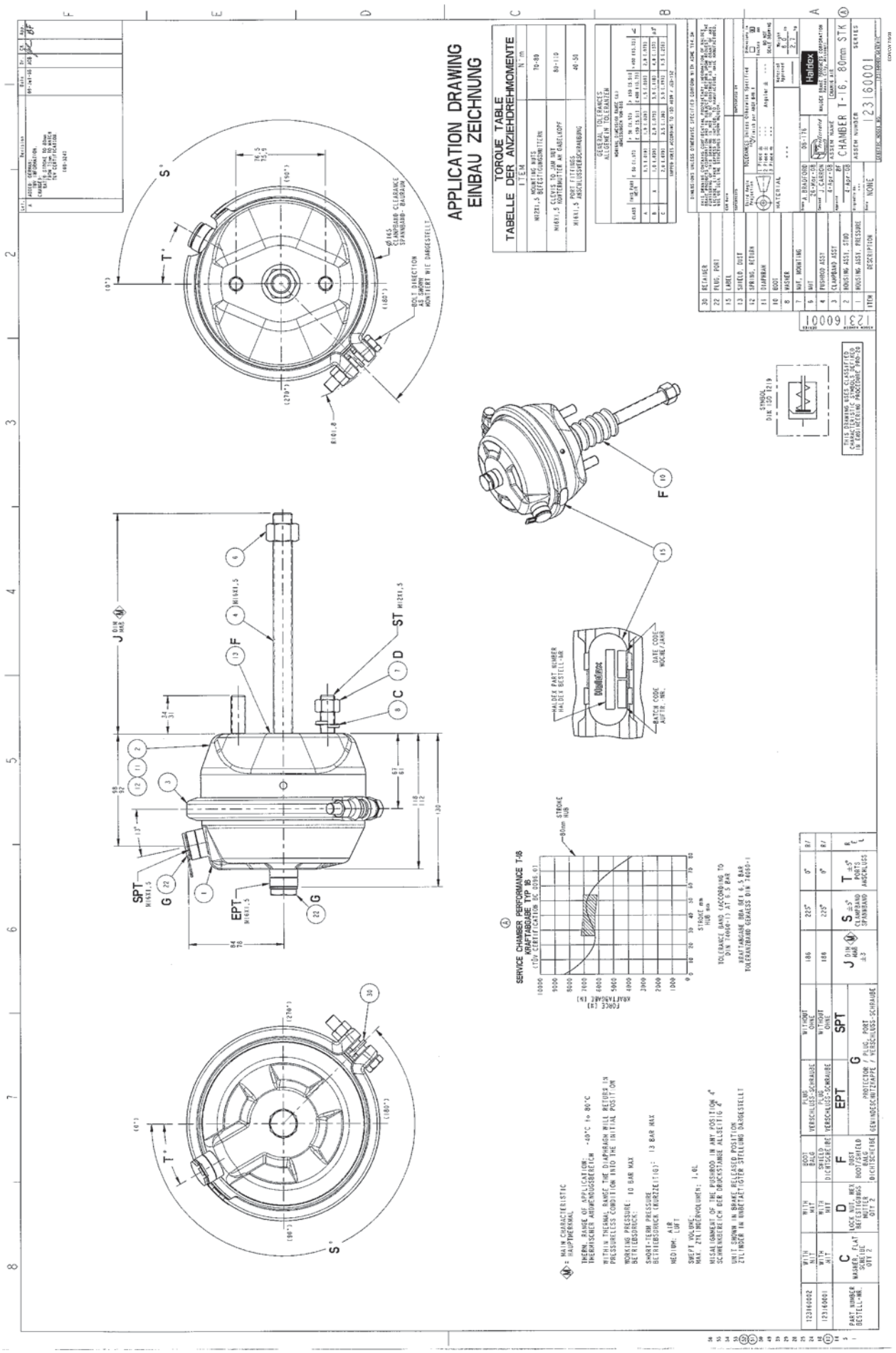
APPLICATION DRAWING
EINBAU ZEICHNUNG
TORQUE TABLE
TABELLE DER ANZIEHDREHMOMENTE
CHAMBER T-16, 80mm STK
123160001
SERVICE CHAMBER PERFORMANCE T-16
KRAFTABGABE TYP 16

Actuation

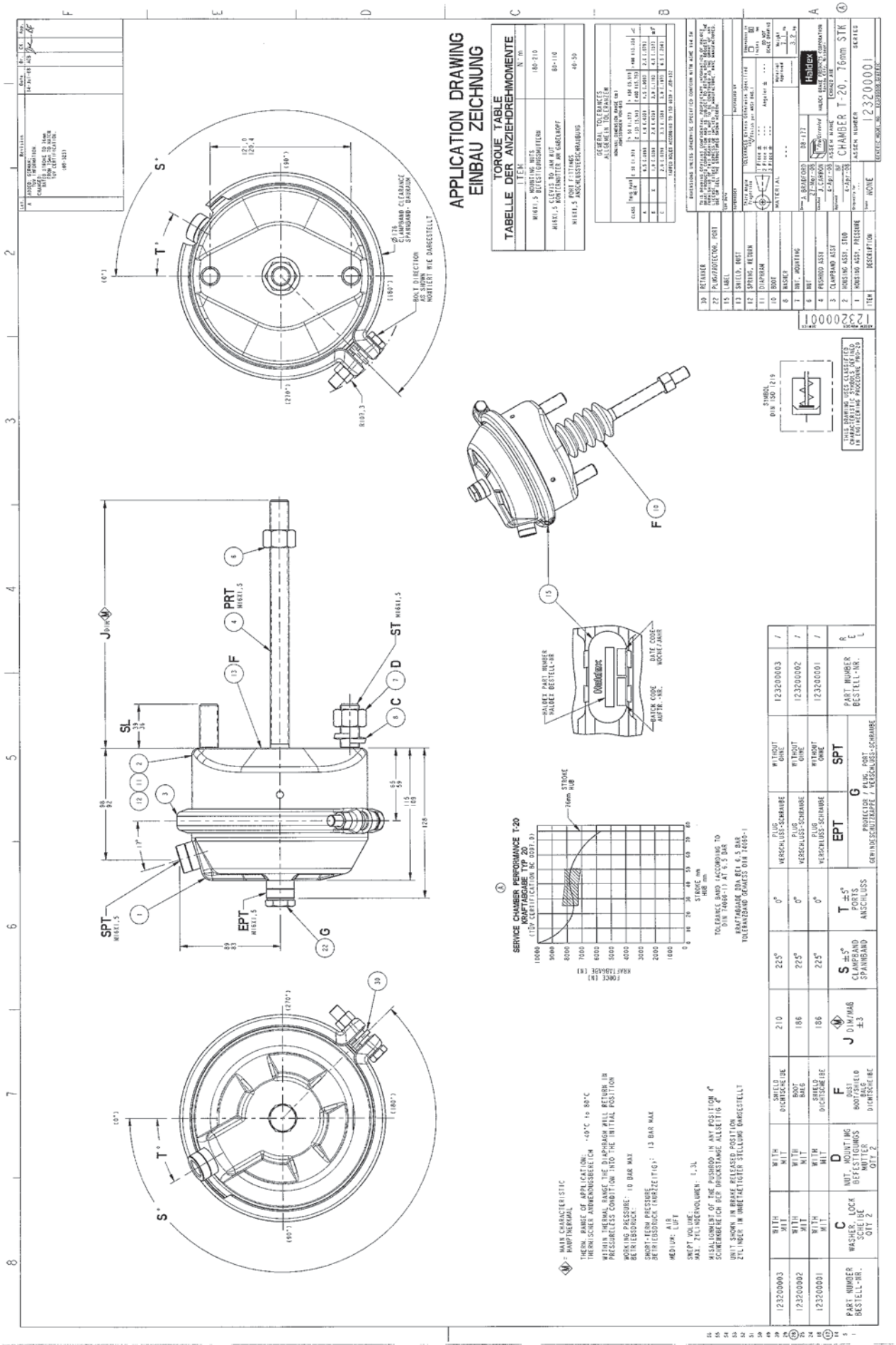
APPLICATION DRAWING
EINBAU ZEICHNUNG
TORQUE TABLE
TABELLE DER ANZIEHDREHMOMENTE
CHAMBER T-20, 76mm STK
123200001
SERVICE CHAMBER PERFORMANCE T-20
KRAFTABGABE TYP 20
PART NUMBER
BESTELL-NR.
123200003
123200002
123200001

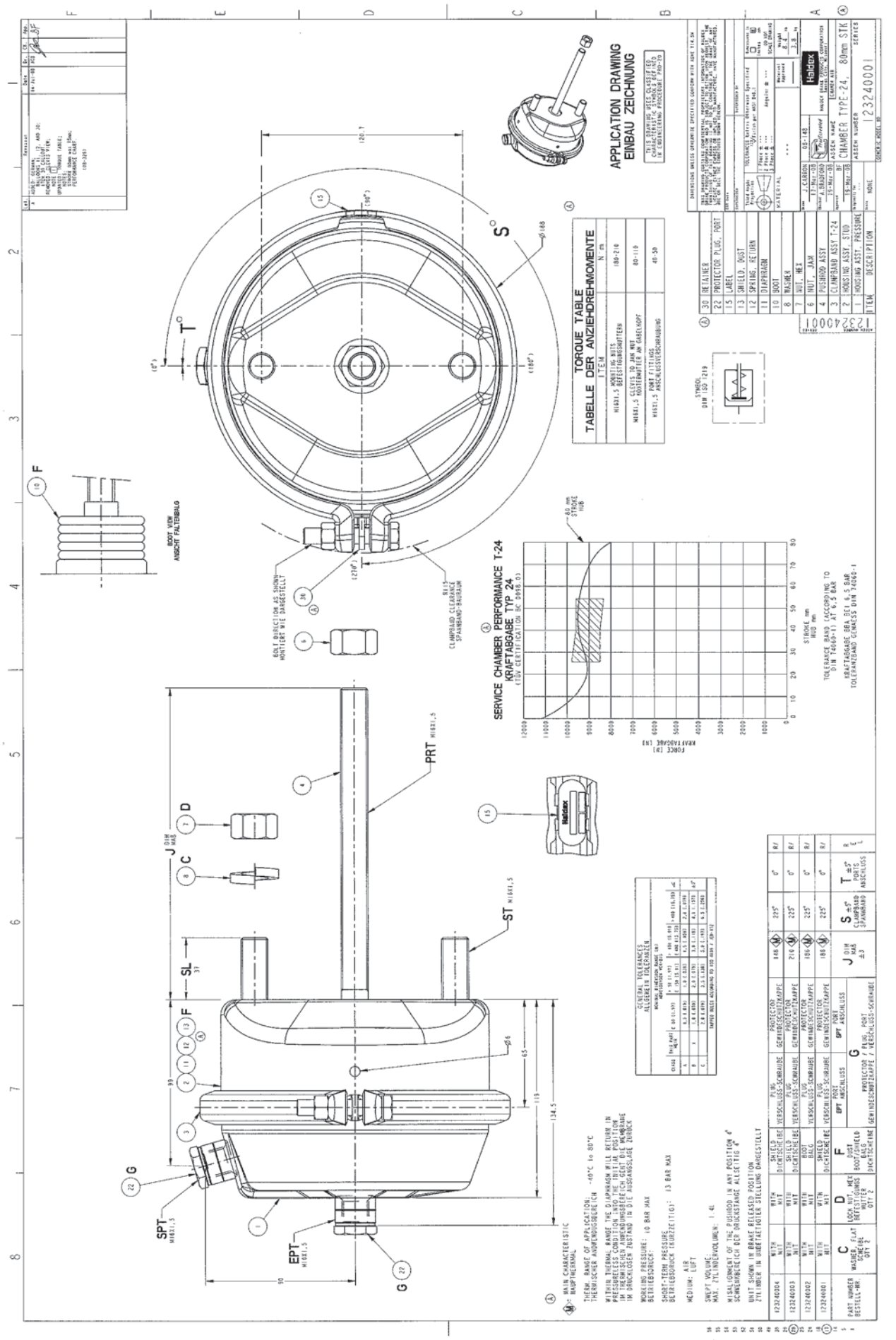
APPLICATION DRAWING
EINBAU ZEICHNUNG
TORQUE TABLE
TABELLE DER ANZIEHDREHMOMENTE
SERVICE CHAMBER PERFORMANCE T-24
KRAFTABGABE TYP 24
CHAMBER TYPE-24, 80mm STK
123240001
PRT
ST
SPT
EPT
SL
F
G
C
D
J DIM
BOOT VIEW
ANSICHT FALTENBALG
BOLT DIRECTION AS SHOWN
MONTIERT WIE DARGESTELLT
CLAMPBAND CLEARANCE
SPANNBAND DURCHMESSER
SYMBOL
DIN ISO 7369
STROKE mm
HUB mm
FORCE [N]
KRAFT [DaN]
MAIN CHARACTERISTIC
HAUPTMERKMAL
WORKING PRESSURE:
BETRIEBSDRUCK:
MEDIUM: AIR
MEDIUM: LUFT
SWEPT VOLUME:
HUBVOLUMEN:
UNIT SHOWN IN BRAKE RELEASED POSITION
EINHEIT IM UNBETÄTIGTEM STELLUNG DARGESTELLT
PART NUMBER
BESTELL-NR.
WASHER
SCHEIBE
LOCK NUT, HEX
BEFESTIGUNGS
MUTTER
SHIELD
DICHTSCHEIBE
DUST
BOOT
BALG
DICHTSCHEIBE
PLUG
VERSCHLUSS-SCHRAUBE
PROTECTOR
GEWINDESCHUTZKAPPE
PROTECTOR / PLUG, PORT
GEWINDESCHUTZKAPPE / VERSCHLUSS-SCHRAUBE
EPT ANSCHLUSS
SPT ANSCHLUSS
S ±5°
CLAMPBAND
SPANNBAND
T ±5°
PORT
ANSCHLUSS
WITH
MIT
SHIELD
DICHTSCHEIBE
DUST
BOOT
BALG
DICHTSCHEIBE
PLUG
VERSCHLUSS-SCHRAUBE
PROTECTOR
GEWINDESCHUTZKAPPE
PROTECTOR
GEWINDESCHUTZKAPPE
PROTECTOR
GEWINDESCHUTZKAPPE
PLUG
VERSCHLUSS-SCHRAUBE
PLUG
VERSCHLUSS-SCHRAUBE
PROTECTOR
GEWINDESCHUTZKAPPE
PROTECTOR
GEWINDESCHUTZKAPPE
PROTECTOR
GEWINDESCHUTZKAPPE
PROTECTOR / PLUG, PORT
GEWINDESCHUTZKAPPE / VERSCHLUSS-SCHRAUBE
EPT ANSCHLUSS
SPT ANSCHLUSS
S ±5°
CLAMPBAND
SPANNBAND
T ±5°
PORT
ANSCHLUSS
WITH
MIT
SHIELD
DICHTSCHEIBE
DUST
BOOT
BALG
DICHTSCHEIBE
PLUG
VERSCHLUSS-SCHRAUBE
PROTECTOR
GEWINDESCHUTZKAPPE
PROTECTOR
GEWINDESCHUTZKAPPE
PROTECTOR
GEWINDESCHUTZKAPPE
PLUG
VERSCHLUSS-SCHRAUBE
PLUG
VERSCHLUSS-SCHRAUBE
PROTECTOR
GEWINDESCHUTZKAPPE
PROTECTOR
GEWINDESCHUTZKAPPE
PROTECTOR
GEWINDESCHUTZKAPPE
PROTECTOR / PLUG, PORT
GEWINDESCHUTZKAPPE / VERSCHLUSS-SCHRAUBE
EPT ANSCHLUSS
SPT ANSCHLUSS
S ±5°
CLAMPBAND
SPANNBAND
T ±5°
PORT
ANSCHLUSS
WITH
MIT
SHIELD
DICHTSCHEIBE
DUST
BOOT
BALG
DICHTSCHEIBE
PLUG
VERSCHLUSS-SCHRAUBE
PROTECTOR
GEWINDESCHUTZKAPPE
PROTECTOR
GEWINDESCHUTZKAPPE
PROTECTOR
GEWINDESCHUTZKAPPE
PLUG
VERSCHLUSS-SCHRAUBE
PLUG
VERSCHLUSS-SCHRAUBE
PROTECTOR
GEWINDESCHUTZKAPPE
PROTECTOR
GEWINDESCHUTZKAPPE
PROTECTOR
GEWINDESCHUTZKAPPE
PROTECTOR / PLUG, PORT
GEWINDESCHUTZKAPPE / VERSCHLUSS-SCHRAUBE
EPT ANSCHLUSS
SPT ANSCHLUSS
S ±5°
CLAMPBAND
SPANNBAND
T ±5°
PORT
ANSCHLUSS
WITH
MIT
SHIELD
DICHTSCHEIBE
DUST
BOOT
BALG
DICHTSCHEIBE
PLUG
VERSCHLUSS-SCHRAUBE
PROTECTOR
GEWINDESCHUTZKAPPE
PROTECTOR
GEWINDESCHUTZKAPPE
PROTECTOR
GEWINDESCHUTZKAPPE
PLUG
VERSCHLUSS-SCHRAUBE
PLUG
VERSCHLUSS-SCHRAUBE
PROTECTOR
GEWINDESCHUTZKAPPE
PROTECTOR
GEWINDESCHUTZKAPPE
PROTECTOR
GEWINDESCHUTZKAPPE
PROTECTOR / PLUG, PORT
GEWINDESCHUTZKAPPE / VERSCHLUSS-SCHRAUBE
EPT ANSCHLUSS
SPT ANSCHLUSS
S ±5°
CLAMPBAND
SPANNBAND
T ±5°
PORT
ANSCHLUSS
WITH
MIT
SHIELD
DICHTSCHEIBE
DUST
BOOT
BALG
DICHTSCHEIBE
PLUG
VERSCHLUSS-SCHRAUBE
PROTECTOR
GEWINDESCHUTZKAPPE
PROTECTOR
GEWINDESCHUTZKAPPE
PROTECTOR
GEWINDESCHUTZKAPPE
PLUG
VERSCHLUSS-SCHRAUBE
PLUG
VERSCHLUSS-SCHRAUBE
PROTECTOR
GEWINDESCHUTZKAPPE
PROTECTOR
GEWINDESCHUTZKAPPE
PROTECTOR
GEWINDESCHUTZKAPPE
PROTECTOR / PLUG, PORT
GEWINDESCHUTZKAPPE / VERSCHLUSS-SCHRAUBE
EPT ANSCHLUSS
SPT ANSCHLUSS
S ±5°
CLAMPBAND
SPANNBAND
T ±5°
PORT
ANSCHLUSS

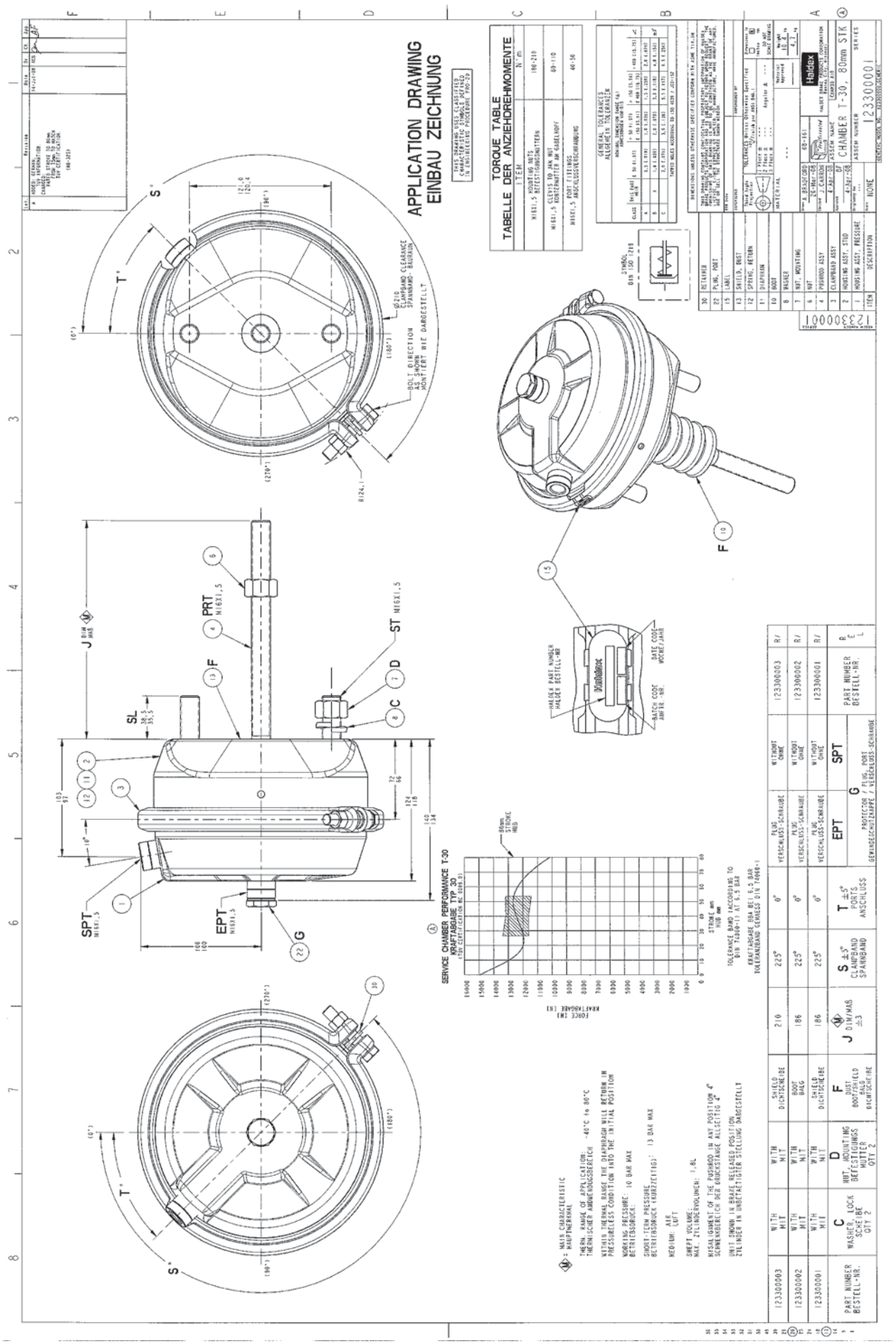
APPLICATION DRAWING
EINBAU ZEICHNUNG
TORQUE TABLE
TABELLE DER ANZIEHDREHMOMENTE
SERVICE CHAMBER PERFORMANCE T-30
KRAFTABGABE TYP 30
CHAMBER T-30, 80mm STK
123300001

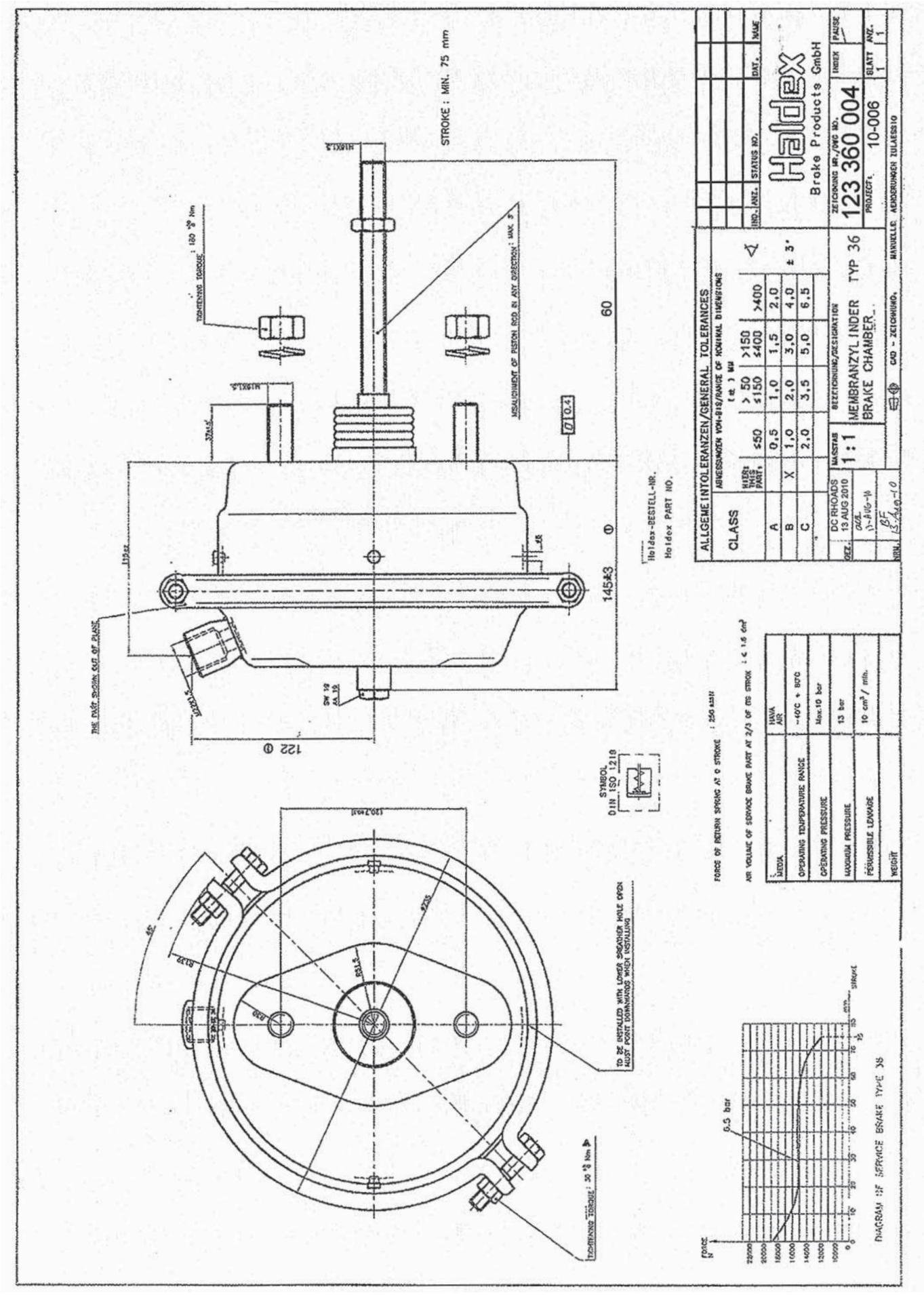
STROKE : MIN. 75 mm
ALLGEMEINTOLERANZEN/GENERAL TOLERANCES
CLASS
A 0,5 1,0 1,5 2,0
B X 1,0 2,0 3,0 4,0
C 2,0 3,5 5,0 6,5
MEMBRANZYLINDER TYP 36
BRAKE CHAMBER
123 360 004
10-006
Haldex
Brake Products GmbH
Haldex-BESTELL-NR.
Haldex PART NO.
SYMBOL
DIN ISO 1218
122
145±3
60
6,5 bar
DIAGRAM OF SERVICE BRAKE TYPE 36

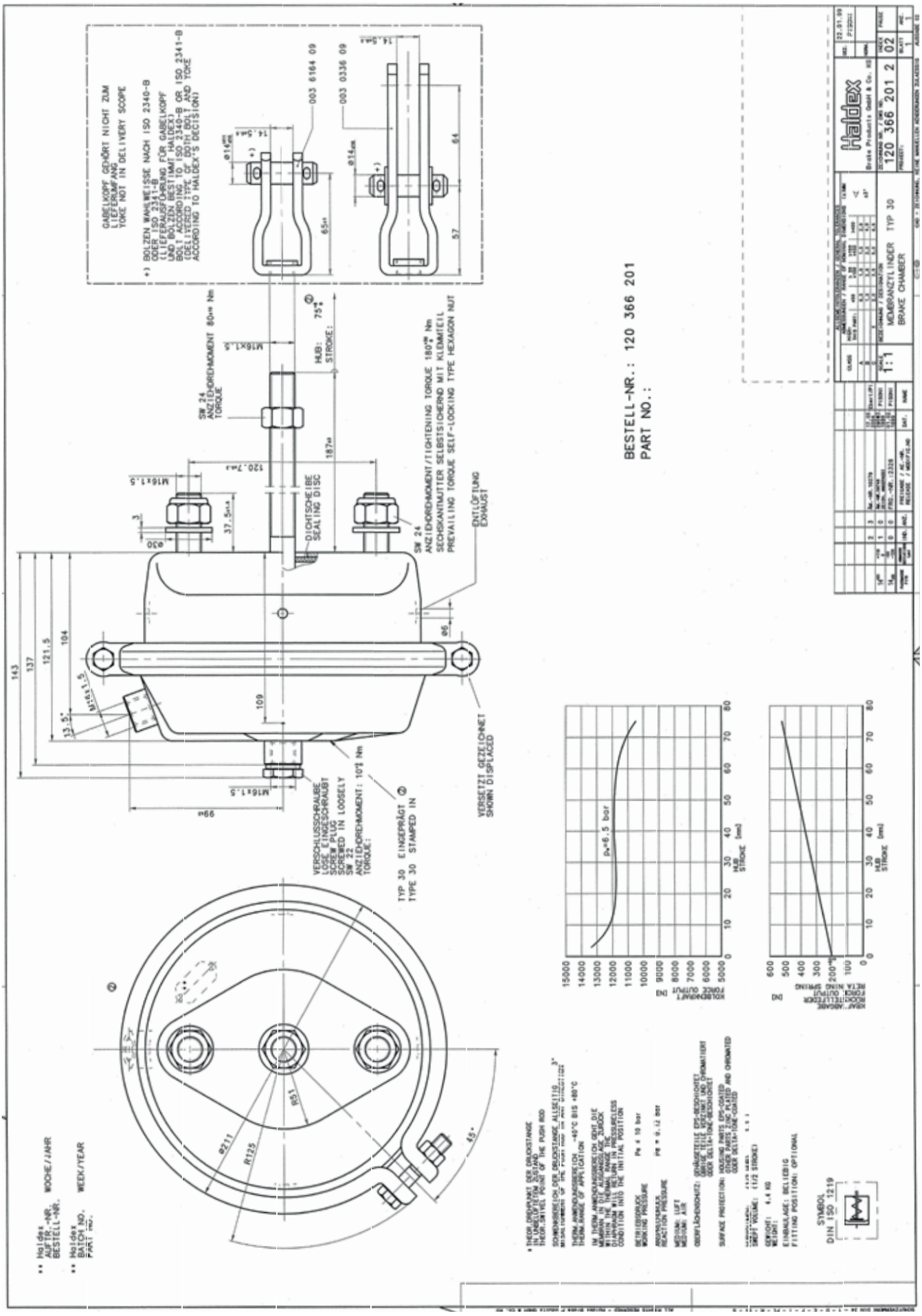
BESTELL-NR.: 120 366 201
PART NO.:
MEMBRANZYLINDER TYP 30
BRAKE CHAMBER
1:1
120 366 201 2 02
Haldex
Brake Products GmbH & Co. KG
GABELKOPF GEHÖRT NICHT ZUM LIEFERUMFANG
YOKE NOT IN DELIVERY SCOPE
BOLZEN WAHLWEISSE NACH ISO 2340-B ODER ISO 2341-B (LIEFERAUSFÜHRUNG FÜR GABELKOPF UND BOLZEN BESTIMMT HALDEX)
BOLT ACCORDING TO ISO 2340-B OR ISO 2341-B (DELIVERED TYPE OF BOTH BOLT AND YOKE ACCORDING TO HALDEX'S DECISION)
003 6164 09
003 0336 09
SW 24
ANZIEHDREHMOMENT 80** Nm
TORQUE
HUB: 75*
STROKE:
SW 24
ANZIEHDREHMOMENT/TIGHTENING TORQUE 180** Nm
SECHSKANTMUTTER SELBSTSICHERND MIT KLEMMTEIL
PREVAILING TORQUE SELF-LOCKING TYPE HEXAGON NUT
DICHTSCHEIBE
SEALING DISC
ENTLÜFTUNG
EXHAUST
VERSETZT GEZEICHNET
SHOWN DISPLACED
VERSCHLUSSSCHRAUBE
LOSE EINGESCHRAUBT
SCREW PLUG
SCREWED IN LOOSELY
SW 22
ANZIEHDREHMOMENT: 10** Nm
TORQUE:
TYP 30 EINGEPRÄGT
TYPE 30 STAMPED IN
Δx=6.5 bar
KOLBENKRAFT
FORCE OUTPUT
HUB
STROKE
DELTA RING SPRING
SYMBOL
DIN ISO 1219
** Haldex AUFTR.-NR. BESTELL-NR.
WOCHE/JAHR
** Haldex BATCH NO. PART NO.
WEEK/YEAR

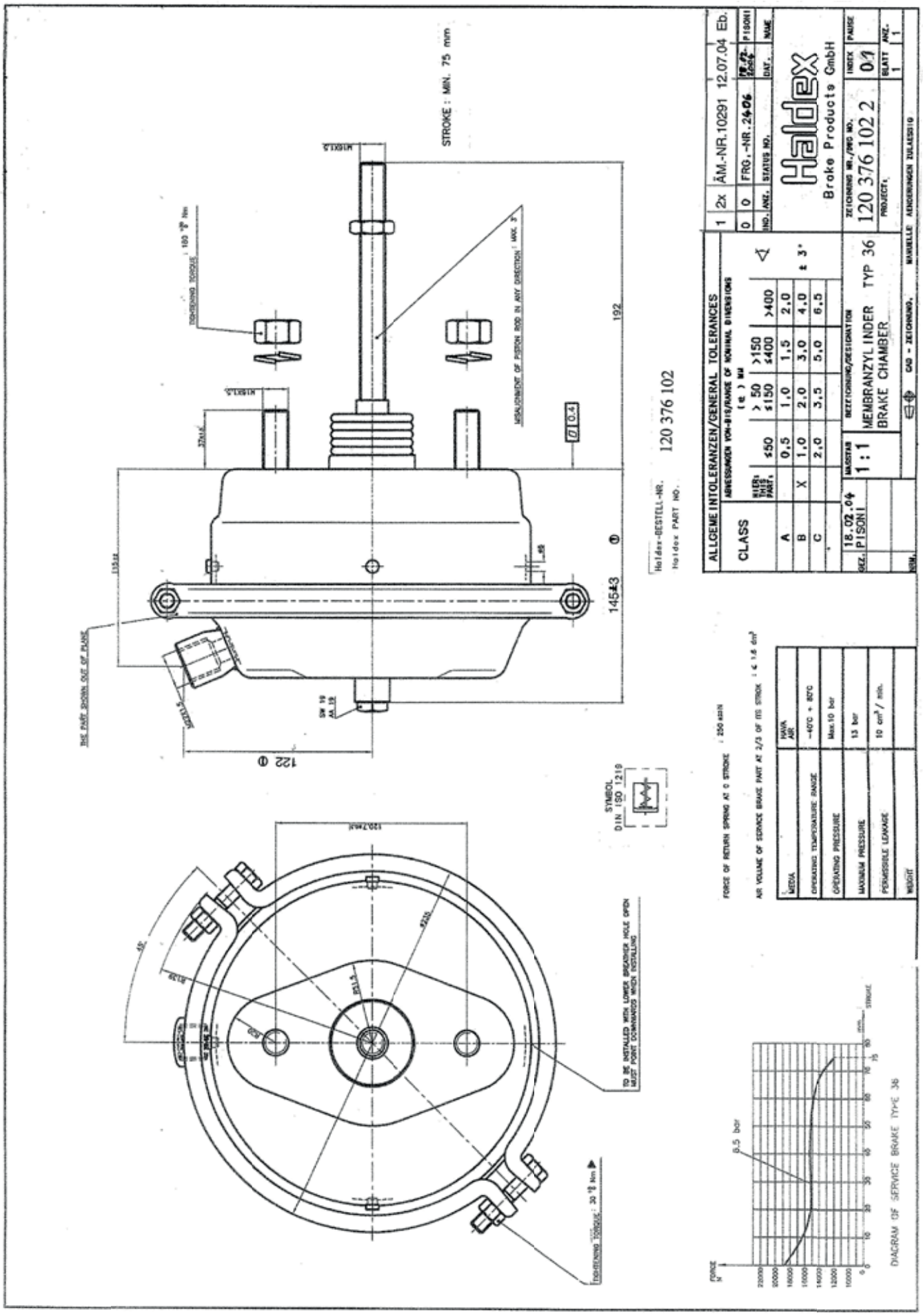
STROKE : MIN. 75 mm
120 376 102
Haldex-BESTELL-NR.
Haldex PART NO.
ALLGEMEINTOLERANZEN/GENERAL TOLERANCES
CLASS
ABMESSUNGEN VON-BIS/RANGE OF NOMINAL DIMENSIONS
MEMBRANZYLINDER TYP 36
BRAKE CHAMBER
Haldex
Brake Products GmbH
120 376 102 2
DIAGRAM OF SERVICE BRAKE TYPE 36

Double diaphragm spring brake - Blue Seal

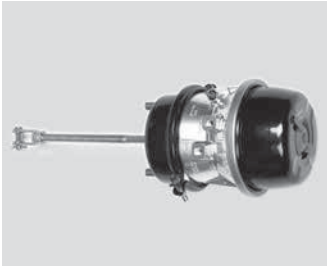

135 /136 ... ...

Use

Double diaphragm brake chambers consist of one diaphragm unit for the service brake, and one diaphragm spring unit for the parking brake. These chambers are used for mechanically-operated S-cam/disc brakes.

Function

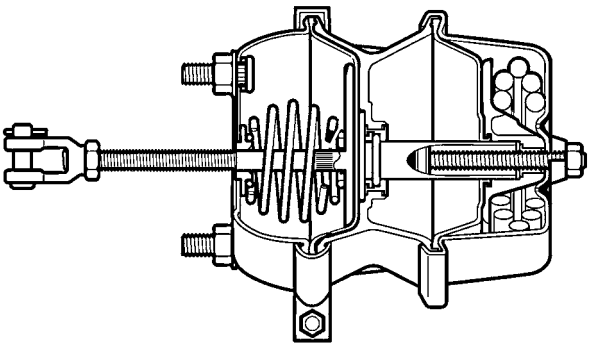

Diaphragm unit for the service brake

The two housing halves are sealed against each other by the diaphragm and clamped together by a retaining strap. When air is admitted to the compression space via port 11 (service), the diaphragm pushes the piston and push rod out of the cylinder, against the spring force. The yoke mounted on the piston rod transfers the force to the wheel brake, via the slack adjuster. The piston space is connected to atmosphere through a port. When the service brake is released, the air in the pressure space is exhausted. The brake arm, supported by the spring, pushes the piston rod, piston and diaphragm back to the floor of the housing. The two diaphragm units operate independently of each other.

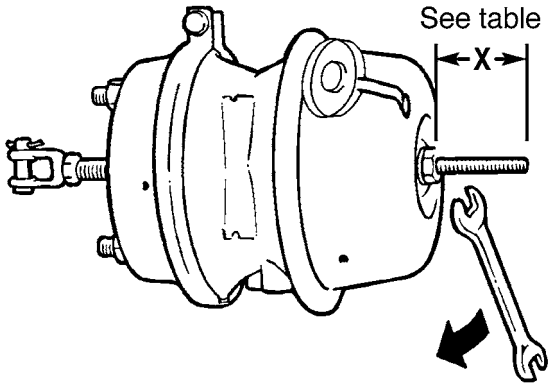

Diaphragm spring unit for the parking brake

When the air is exhausted from the compression space via port 12, the spring pushes the piston rod of the spring actuator unit, via the diaphragm, against the piston rod of the service brake unit. The yoke mounted on the piston rod transfers the force to the wheel brake, via the slack adjuster. When the brake is released, air is admitted to the connection again.

Mechanical release device

The double-diaphragm combined brake cylinder has a mechanical release device. If there is a compressed air loss, the spring can be preloaded mechanically using the release tool mounted on the cylinder in order to release the wheel brake.

Versions

Version	Type	Stroke (mm)	X-minimum
drum brake	20/30	76	86
drum brake	24/30	76	86
drum brake	30/30	76	86

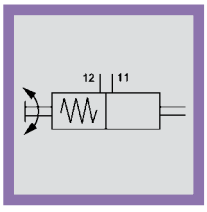

Symbol

Installation

Please observe the following instructions for safe and permanent mounting:

The mounting bracket for the spring brake actuator must be flat and adequately dimensioned as regards material thickness and size. The actuator must not overhang.

The mounting surface of the bracket must not have been given the final paint coat before the actuator is mounted.

No intermediate plates, plain washers, spring washers etc. should be fitted between the bracket mounting surface and the service brake unit. Make sure the actuator is mounted directly. The maximum excursion of the piston rod in all directions is 3°.

The lowest of the drilled pressure equalisation ports must not be blanked off

The piston rod length has been correctly selected if the piston rests against the diaphragm in the rest position and when in the working position, forms a right angle with slack adjuster at half stroke.

Observe the tightening torques for the mounting nuts.

Tighten the nuts alternately and in stages.

Before taking the vehicle into operation, the release tool must be removed and stowed in place provided. Close off the port with the dust protection cap.

Directions and approvals by the axle and vehicle manufacturer must be observed.

Please note: Spring brake actuator housing parts must not be dismantled (danger of injury).

Testing

Test the cylinder/connections for operation and leaks.

Technical data

Medium:	air
Service pressure:	max. 10.2 bar.
Thermal application range:	-40°C to +80°C
Ports:	M16 x 1.5
Mounting studs:	M 16 x 1.5

Certificate for double diaphragm spring brake

Typ 20/30:	BC 0166.0
Typ 24/30:	BC 0167.0
Typ 30/30:	BC 0168.0

Find further information on
www.haldex.com/trailer-application-guide

Versions

Part number	Type	Stroke	Weight	Seal	C lock nut	D plain washer	E released with tool	G thread protective cap	J	K	S* Tension band	T* Port
136 2030 001	20/30	76/76	8,7 kg	Sealing washer	with	Yes	Yes	Yes	208 mm	246 mm	315°	90°
136 2430 001	24/30	76/76	8,7 kg	Sealing washer	with	Yes	Yes	Yes	208 mm	246 mm	315°	90°
136 2430 002	24/30	76/76	8,7 kg	Sealing washer	without	without	Yes	Yes	188 mm	227 mm	45°	90°
136 3030 001	30/30	76/76	9,7 kg	Sealing washer	with	Yes	Yes	Yes	208 mm	246 mm	315°	90°

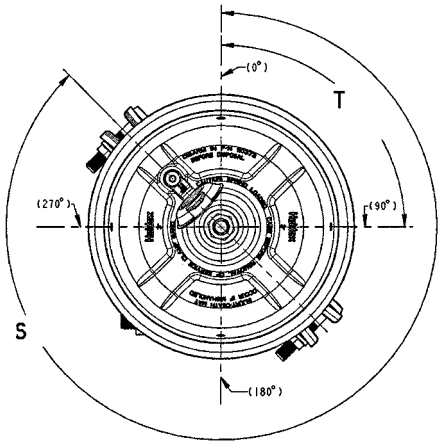
T
S
L
(0°)
(90°)
(180°)
(270°)

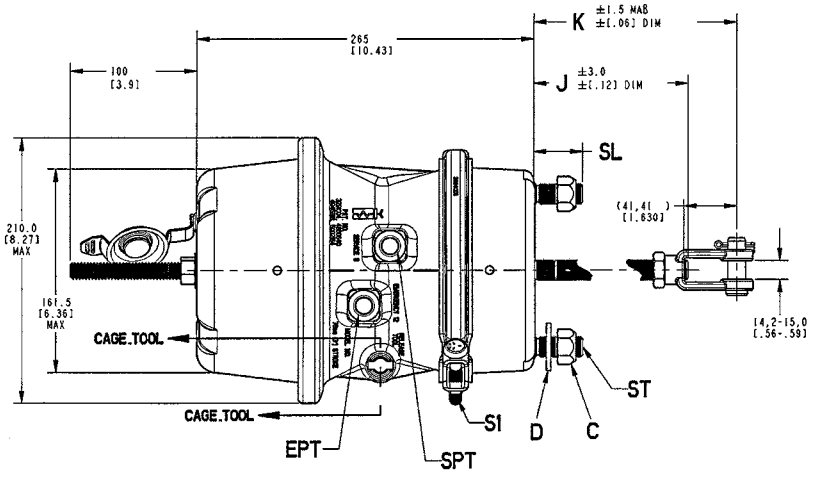
K ±1.5 MAB ±[.06] DIM
J ±3.0 ±[.12] DIM
SL
265 [10.43]
100 [3.9]
210.0 [8.27] MAX
161.5 [6.36] MAX
CAGE.TOOL
CAGE.TOOL
EPT
SPT
S1
D
C
ST
[4,2-15,0 [.56-.59]

136 2030

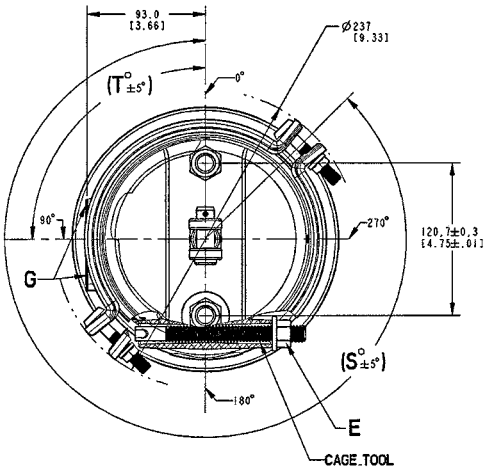
93.0 [3.66]
Ø237 [9.33]
(T°±5°)
0°
90°
270°
120,7±0,3 [4.75±.01]
G
(S°±5°)
180°
E
CAGE.TOOL

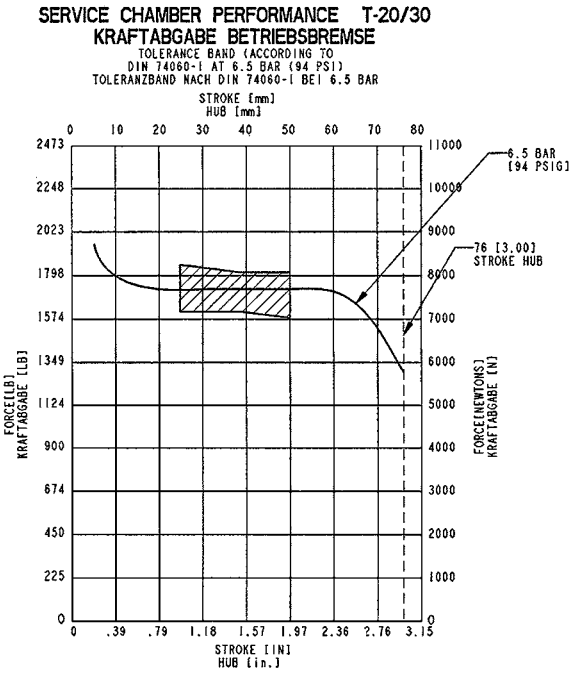
SERVICE CHAMBER PERFORMANCE T-20/30
KRAFTABGABE BETRIEBSBREMSE
TOLERANCE BAND (ACCORDING TO DIN 74060-1 AT 6.5 BAR (94 PSI)
TOLERANZBAND NACH DIN 74060-1 BEI 6.5 BAR
STROKE [mm] HUB [mm]
6.5 BAR [94 PSIG]
76 [3.00] STROKE HUB
FORCE[LB] KRAFTABGABE [LB]
FORCE[NEWTONS] KRAFTABGABE [N]
STROKE [IN] HUB [in.]

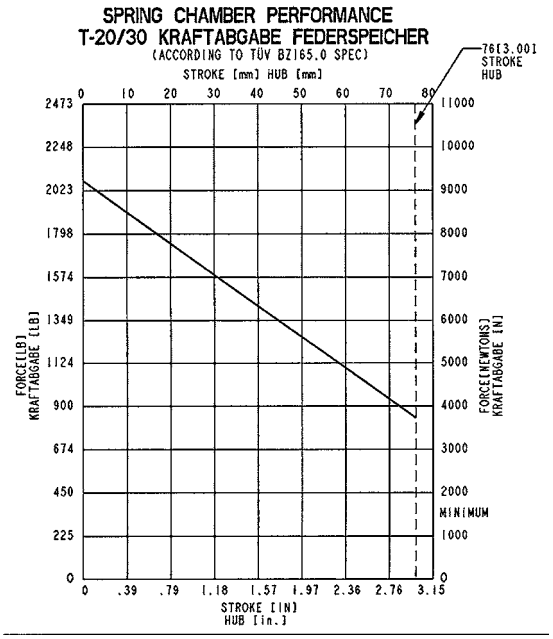
SPRING CHAMBER PERFORMANCE
T-20/30 KRAFTABGABE FEDERSPEICHER
(ACCORDING TO TÜV BZ165.0 SPEC)
STROKE [mm] HUB [mm]
76[3.00] STROKE HUB
MINIMUM
FORCE[LB] KRAFTABGABE [LB]
FORCE[NEWTONS] KRAFTABGABE [N]
STROKE [IN] HUB [in.]

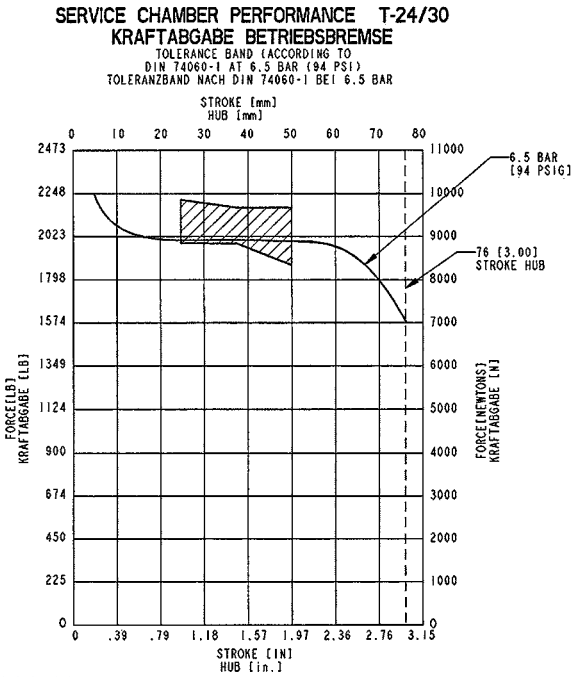

136 2430

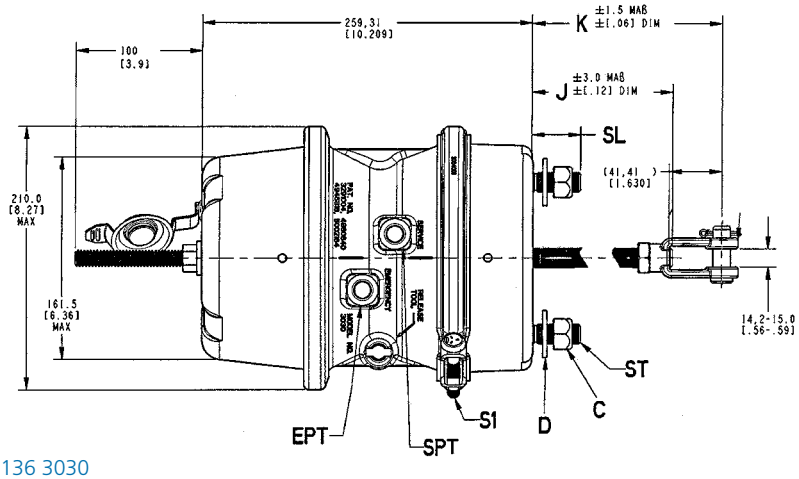

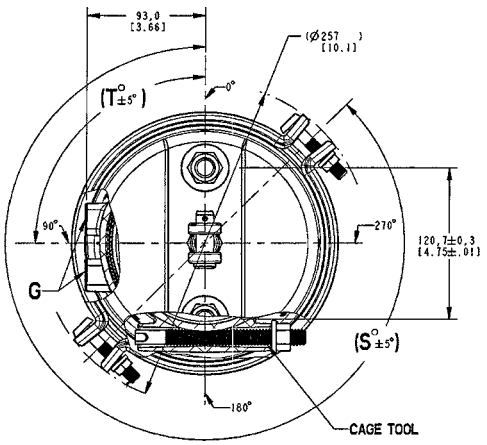

136 3030

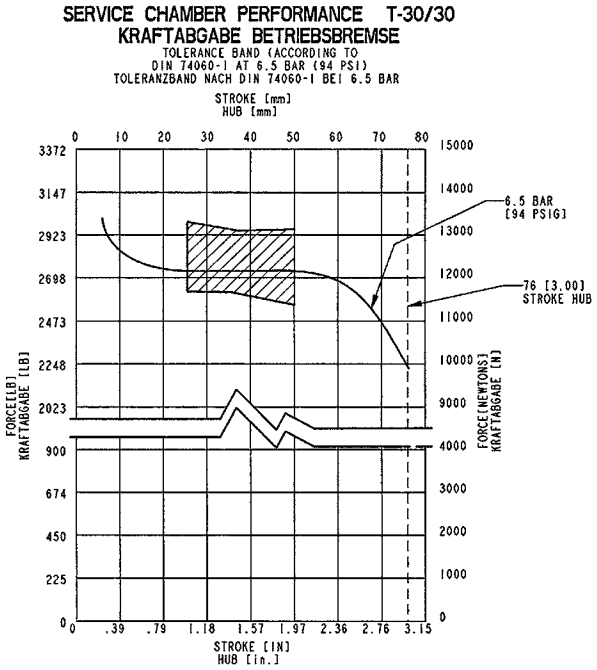

Piston cylinder

Use

The piston cylinder can be fitted in all air brake systems to actuate mechanically-operated wheel brakes.

It can also be used as a control cylinder to actuate other kinds of equipment.

Function

When compressed air is admitted to the piston cylinder, it pushes the piston and push rod out of the cylinder. The push rod, which runs in a loose guide ring in the guide tube, transfers the generated braking force to the brake arm through its yoke. In its released position, the spring pushes the guide tube into its end position. The bellows protects the cylinder interior against dust and splash water. Small flaps in the bellows connect the spaces before the piston with atmosphere.

Installation

The cylinder is mounted on a carrier plate fitted to the axle, or the vehicle frame, with four mounting bolts. Make sure when doing this that the cylinder is tilted towards the yoke in order to prevent the ingress of water. When the brake is correctly adjusted, the piston stroke should be no more than 1/3 to 1/2 of



340 005



340 029

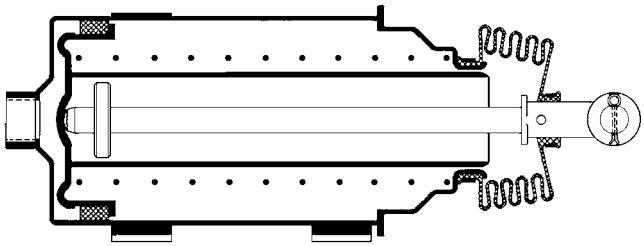

Versions

Part number	Diameter (mm)	Stroke (mm)	Average force at 6 bar	L*	C*	X*	Y*	Z*	Bracket	tension band	Note
340 005 001	100	135	4200N	300	140	14	14	28	with	with	
340 008 001	125	135	6700N	335	170	14	14	28	with	with	
340 011 001	140	155	8400N	355	170	14	14	-	with	with	A140 DIN74282
340 011 021	140	155	8400N	355	170	14	14	-	with	with	Special version
340 013 001	150	155	9700N	355	157	14	14	-	with	with	
340 029 001	65	105	1800N	253	128	12	12	24	with	-	
340 029 011	65	105	1800N	265	137	14	14	28	with	-	
340 029 031	65	105	1800N	253	128	12	12	24	with	-	without piston return spring
340 029 041	65	105	1800N	253	128	12	12	24	with	-	Special version

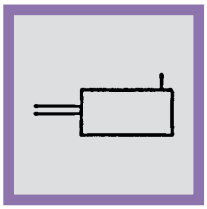

Symbol

the total stroke. The brake arm and piston rod should form a right angle so as to maximise the efficiency of the force transmission. When determining the length of the brake arm, pay attention to the maximum permissible deflection of the swivelling piston rod. In the released position, the piston rod must rest against the end of the piston.

Testing

› Test the bellows.

› Check the cylinder response pressure: max. 0.5 bar.

› Check the piston cylinder stroke is correctly set:
Full braking should be approx. 1/3 to 1/2 of the total stroke, anything over this needs adjusting. Release the brake and check that the cylinder piston returns completely.

Technical data

Service pressure: max. 8 bar.

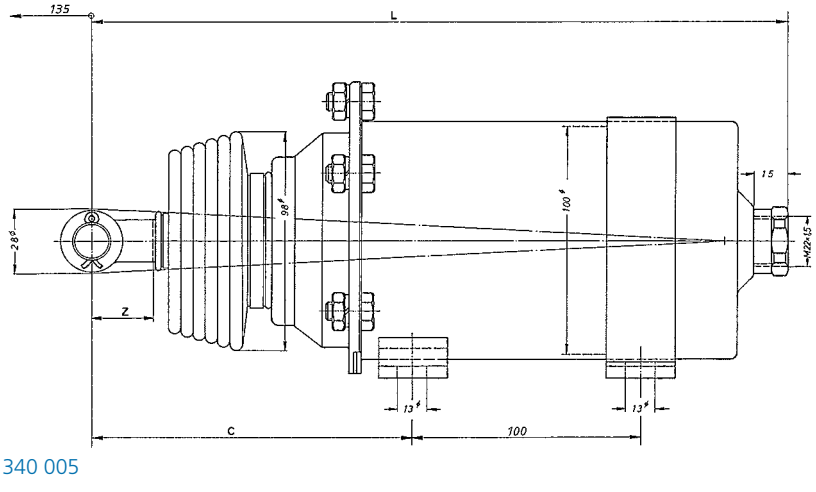

340 005

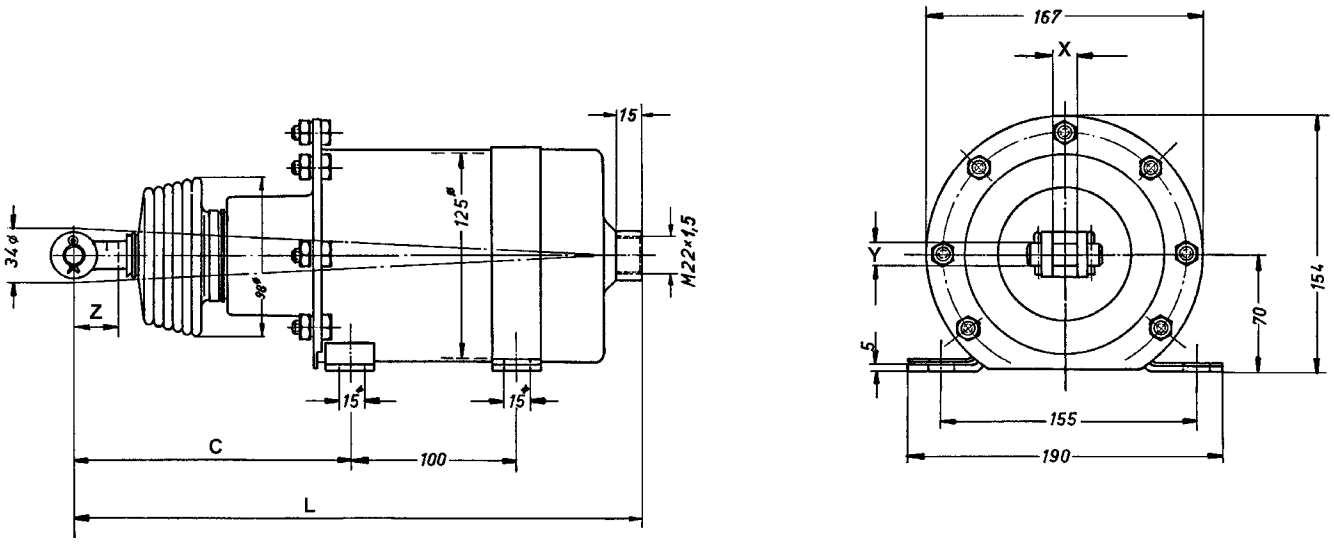

340 008

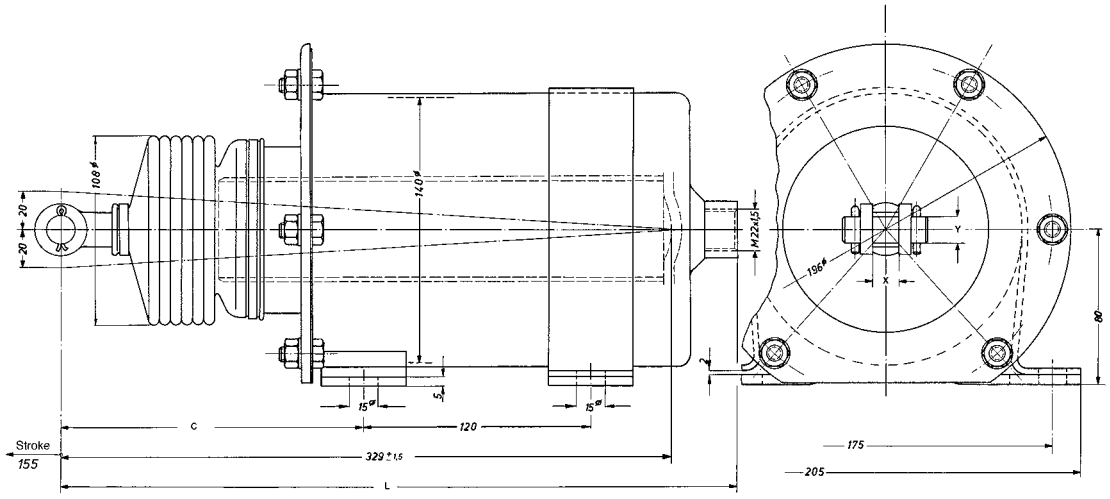

340 011

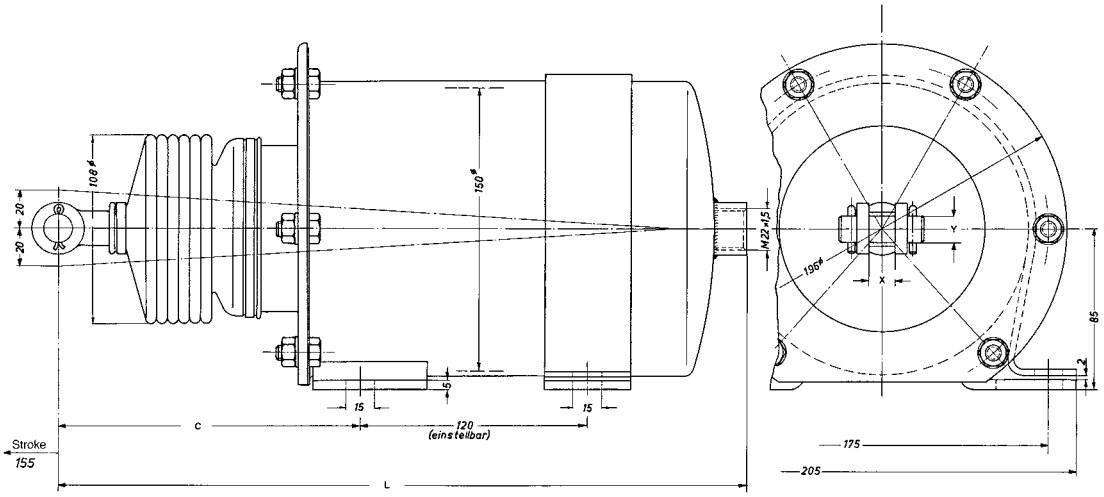

340 013

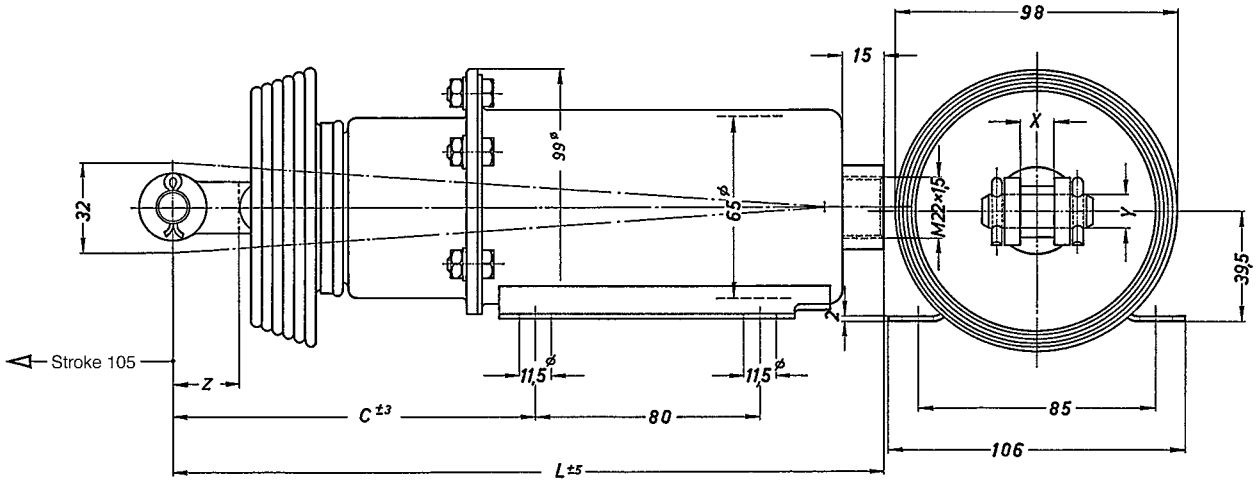

340 029

Automatic brake adjusters

Use

Haldex automatic brake adjusters have revolutionised installation and adjustment procedures for trailer axles. The innovative construction of the self-adjusting version S-ABA makes installation much simpler. Conventional automatic brake adjusters have the control arm in a fixed position. S-ABA functions independently of the angle of the control arm. At the same time, this flexibility means that installation is faster, because the it is no longer necessary to spend time adjusting the control arm for the correct amount of play. And because you're free to select the angle of the control arm, faulty installation or initial setting is no longer a problem – it's practically impossible to install or adjust the S-ABA incorrectly.

S-ABA

- Self-setting adjustment for faster and easier installation
- Always functions correctly – independently of the position of the control arm
- Replaces fixed control arm adjusters, thus reducing number of components needed in stock
- Enables supply of axles with pre-installed automatic brake adjusters
- Readjustment is graduated in order to reduce the risk of excessive readjustment when performing an emergency stop
- Can be supplied with Haldex's electronic brake-wear sensor as an option

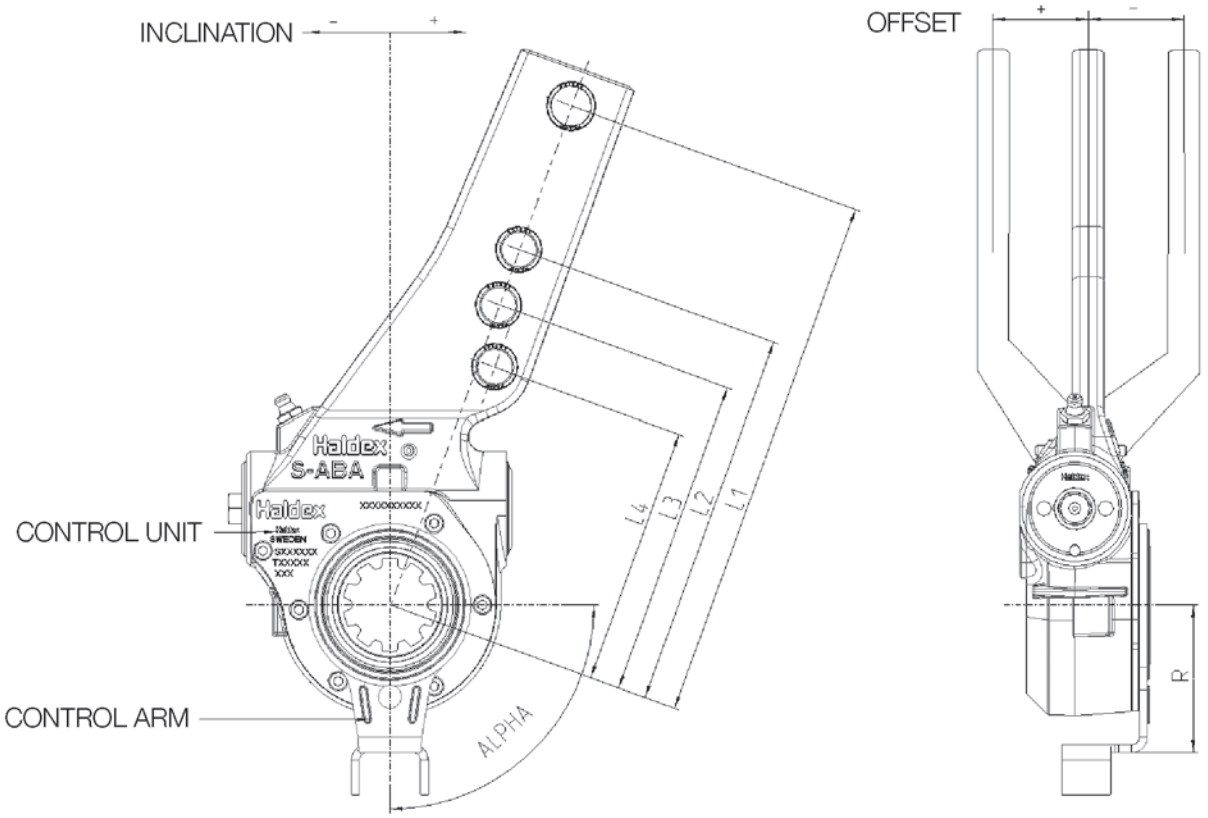

Part number	Casting	Control unit	Number of teeth	L1	L2	L3	L4	L5	L6	L7	Bearing (mm)	Offset	Tilt (degrees)	Gearing type
80019D	5027	530	10	250	180	165	150	135	120	-	14	0	+20	SAE 1 1/2" 10 C
800195S	5027	530	10	250	180	165	150	135	120	-	14	0	+20	SAE 1 1/2" 10 C
80020D	5027	530	10	205	153	140	127	115	-	-	14			SAE 1 1/2" 10 C
80020S	5027	530	10	205	153	140	127	115	-	-	14			SAE 1 1/2" 10 C
80021D	5027	530	37	215	153	129	105	-	-	-	14 (L1:L16)	0	+20	SAE J 498
800215	5027	530	37	215	153	129	105	-	-	-	14 (L1:L16)	0	+20	SAE J 498
80022D	5027	530	10	250	180	155	140	125	105	-	14	0	+20	SAE 1 1/2" 10 C
800DDS	5027	530	10	250	180	155	140	125	105	-	14	0	+20	SAE 1 1/2" 10 C
80023D	5027	530	10	215	153	129	105	-	-	-	14 (L1:L16)	0	+20	SAE 1 1/2" 10 C
80023S	5027	530	10	215	153	129	105	-	-	-	14 (L1:L16)	0	+20	SAE 1 1/2" 10 C
80024D	5027	530	10	210	180	150	125	-	-	-	14	0	+20	SAE 1 1/2" 10 C
80024S	5027	530	10	210	180	150	125	-	-	-	14	0	+20	SAE 1 1/2" 10 C
80484C	5027	74530	10	180	150	125	105	-	-	-	14	0	+20	SAE 1 1/2" -10 C
80495D	5027	530	10	250	180	165	150	135	120	-	14	0	+20	SAE 1 1/2" -10 C
80495S	5027	530	10	250	180	165	150	135	120	-	14	0	+20	SAE 1 1/2" -10 C
80584D	5027	530	10	180	165	150	135	120	-	-	14	0	+20	SAE 1 1/2" -10 C
80584S	5027	530	10	180	165	150	135	120	-	-	14	0	+20	SAE 1 1/2" -10 C

NOTES



AIR SUSPENSION

Levelling valve 140

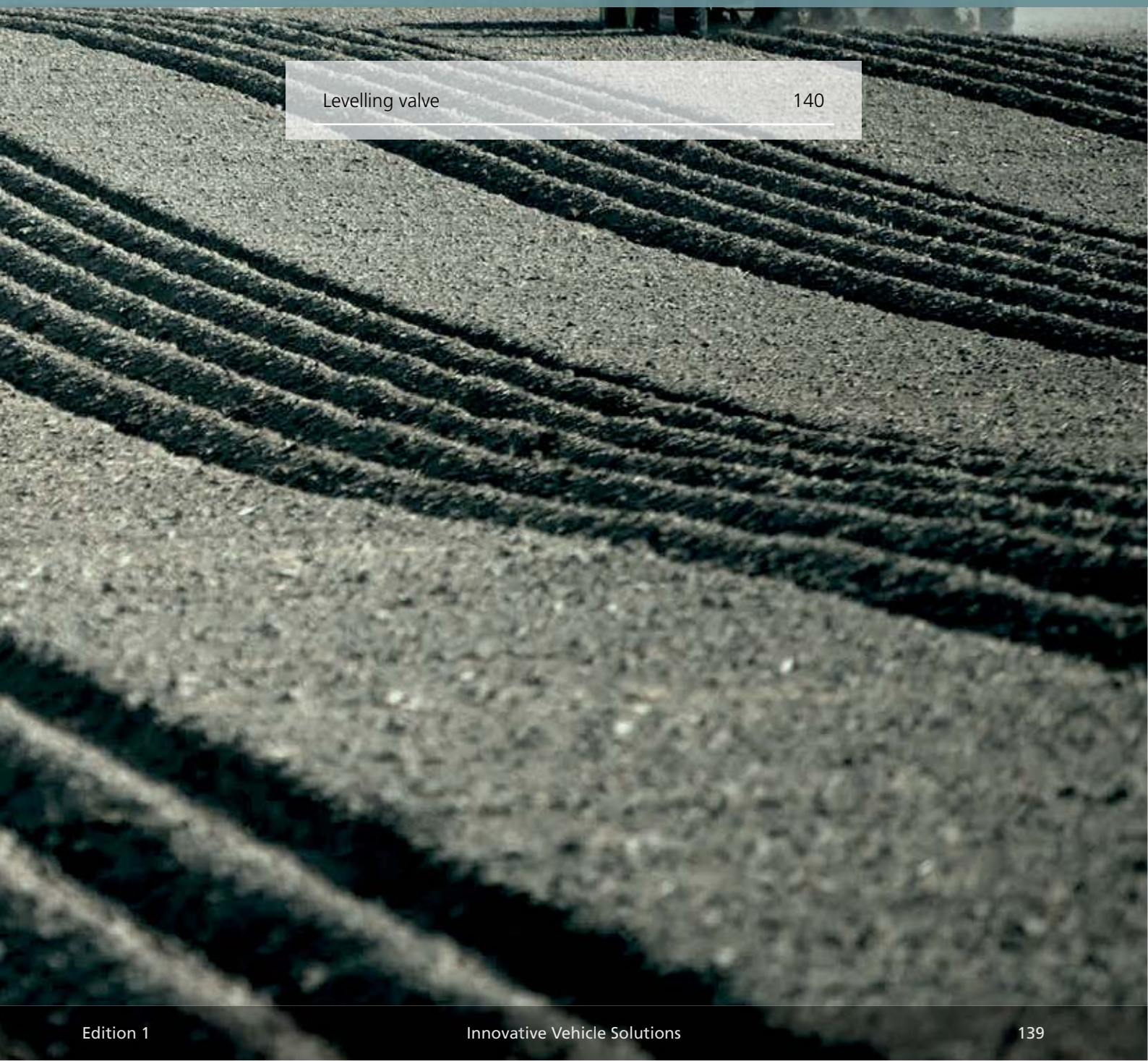

Levelling valve

Use

The levelling valve is installed as a level control valve for load dependent control using the air bellows of vehicles with air suspension. Depending on the version, additional functions, such as second ride height, through a lap position control, are possible.

Function

Levelling valves are fixed to the vehicle chassis and connected to the axle via a control lever and linkage. With the vehicle or trailer stationary the valve is in a state of rest in the so called lap position, i.e. both inlet as well as outlet is closed. By loading the vehicle the chassis (frame) moves down toward the axle, this way the linkage and the control lever are lifted and the inlet port is opened. Supply air at port 1 now flows via the check valve, over the opened inlet, through the area between piston and inlet ports via connection 21 and 22 to the air bellows. The chassis (frame) is now raised until the control lever is horizontal again, and therefore in the lap position.

By unloading the vehicle the chassis is raised because of the high bellows pressure. By means of the linkage the control lever moves down. The movement of the control lever transfers air from ports 21 and 22 to the piston, which opens on the downward trend and opens the outlet. Through the open outlet air now flows from the air bellows out to atmosphere, whereby the chassis (frame) again is lowered to the ride position, (levelling valve control lever horizontal). On vehicles with only one levelling valve per axle (bogie), the air bellows of the left and right side will be supplied with air from this one levelling valve. To avoid instability on cornering, valves are fitted with a cross restriction. Through a particular design the inlet valve part will provide a delayed pressurization between connection 21 and 22 on the left and right side of the vehicle (when exchanging valves use only the same Part No).

On versions with a lap position control a second ride height is available. With it a so-called kneeling (one sided lowering of the chassis) is possible e.g. on buses or vehicles with lift axles. This levelling valve is controlled over an external control port and shifts the lap position. Therefore it is possible to raise or lower the chassis around a certain value. On lifted axles the wheels do not touch the ground when passing over uneven ground i.e. speed bumps, therefore reduced tyre wear. A further use is the adjustment at different saddle heights.



612 032 ...

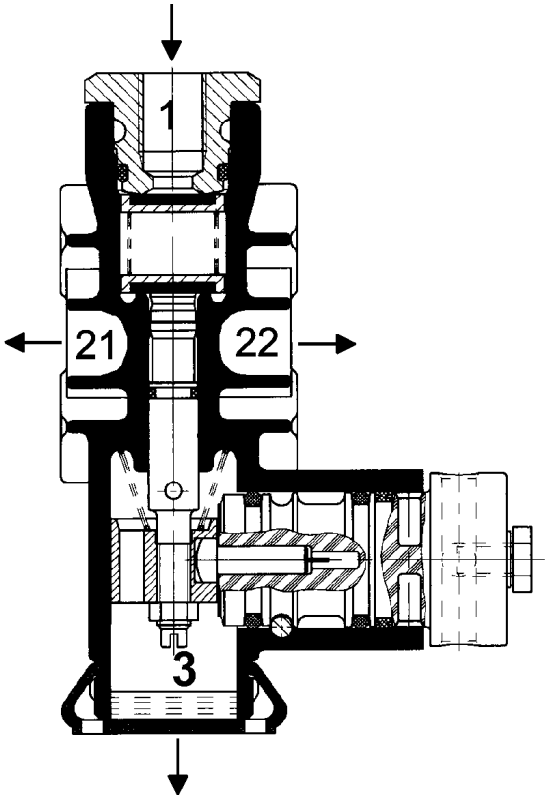

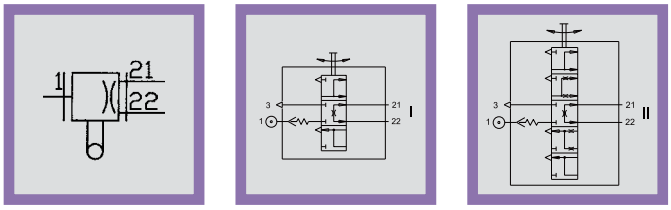

Symbols

Flow diagram

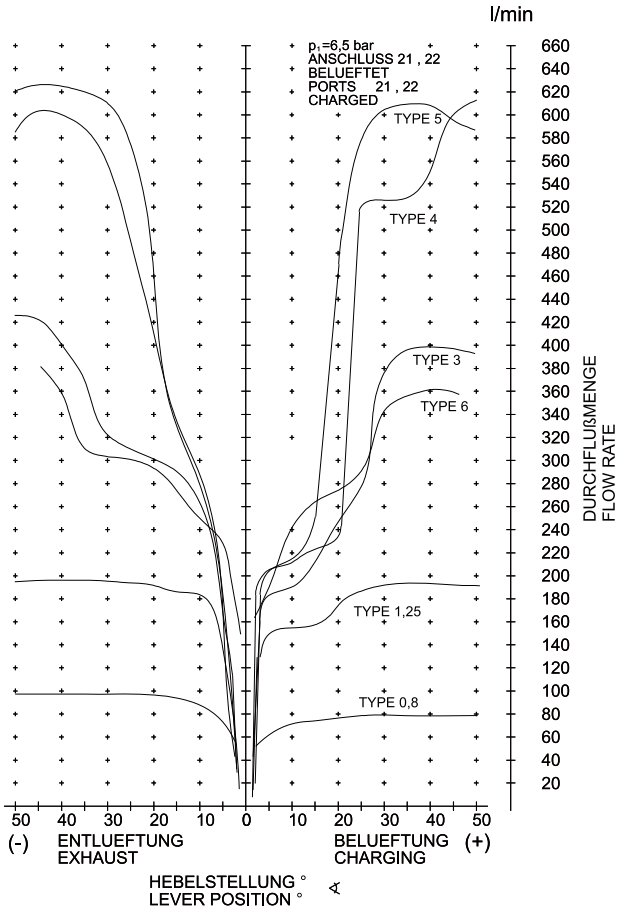

Additional functions

In addition to the basic versions of the levelling valve are those with so-called additional functions. These include:

- Valves with cross-throttling
- Valves with height limitation (see 612 032 ...)
- Valves with cross-throttling and height limit (see 612 032 ...)
- Valves with zero adjustment for second ride height (see 612 046 ...)

Assembly of plastic tube

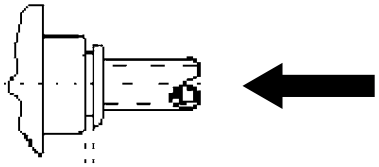

Dismantling plastic tube

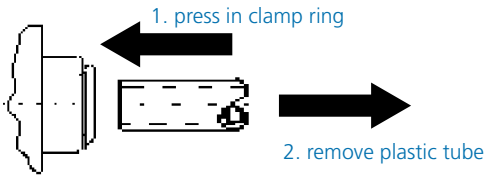

Mechanical part

The levelling valve has to be installed vertically with exhaust port at bottom. For fixing use at least two M8 screws. Where only one valve per bogie is used the valve must be located in the area of the middle of the axle.

The freedom of movement of the centre axle is to be checked. The linkages are to be installed distortion free.

Pneumatic part

On valves with push-in fittings use only nylon pipes 8x1 in accordance with DIN 74 324 or 1/4" x 0,04 in accordance with SAE J844. When assembling the nylon pipes, care should be taken to ensure that the pipes are cut square, to the required length and are free from burrs. Before inserting the pipes in the push-in fittings support sleeves, e.g. in accordance with HALDEX order number 032 0490 09 should be installed in the ends of the pipes. Pipes are to be inserted at least 22 mm deep in the connections.*

In the event of paint/coating work all open connections including the exhaust port should be protected by suitable means to avoid penetration of the paint/coating. After painting/coating remove this protecting material.

In the supply coming from the air reservoir a line filter should be installed (to guard against pollutants).

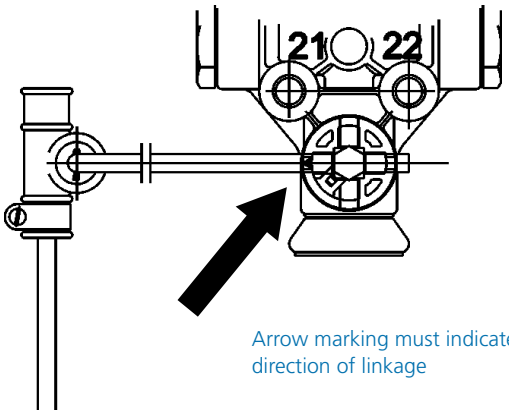

Arrow marking must indicate direction of linkage

Versions

Part number	Version	Ports	Nominal diameter/ type	Linkage 003 5757 09	Symbol
612 035 001	A	M 12 x 1,5	1,25	without	I
612 035 011	A	M 12 x 1,5	1,25	supplied separately	I
612 035 021	A	M 12 x 1,5	3	supplied separately	I
612 035 031	A	M 12 x 1,5	4	supplied separately	II
612 035 041	B	Push-in 8x1	1,25	supplied separately	I
612 035 051	B	Push-in 8x1	3	supplied separately	I
612 035 061	B	Push-in 8x1	4	supplied separately	II
612 035 071	B	Push-in 8x1	5	supplied separately	II

More versions on request

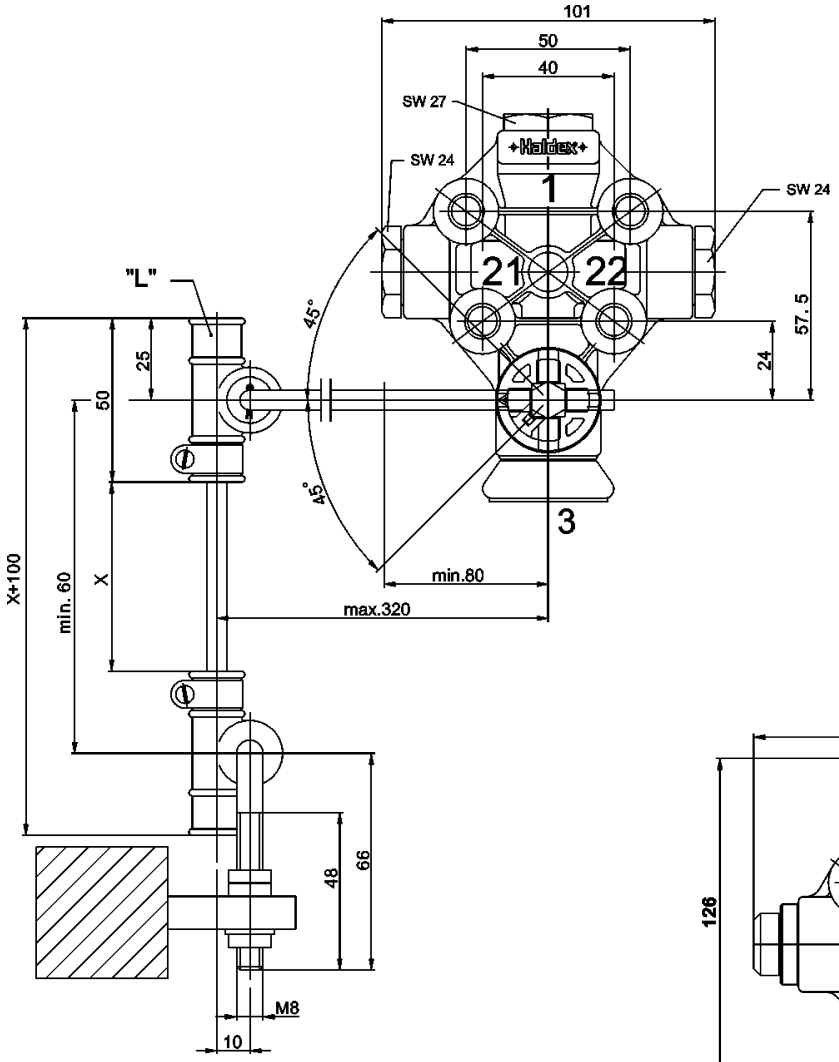

Version A

Twisting the control levers around 180° equal function to the drawn position is reached, within a tolerance.

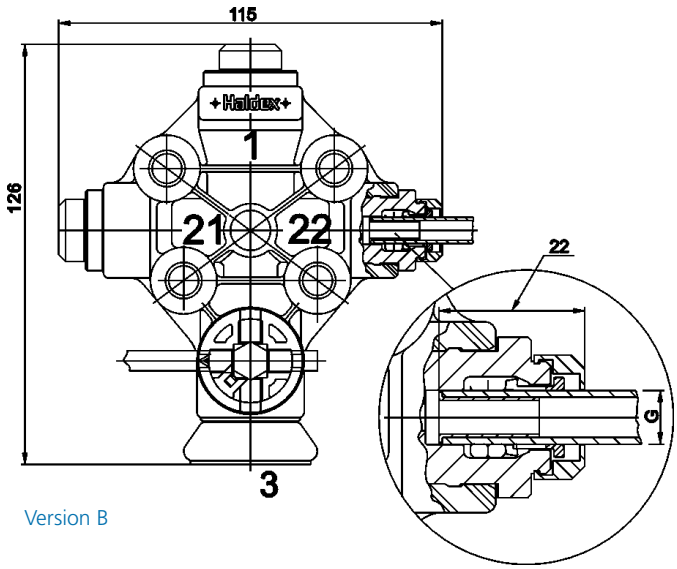

Version B

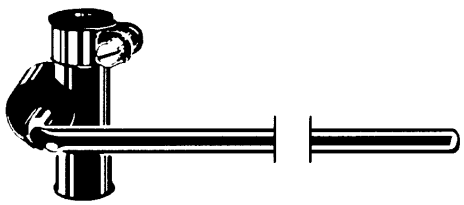

Linkage on valve: 003 5757 09

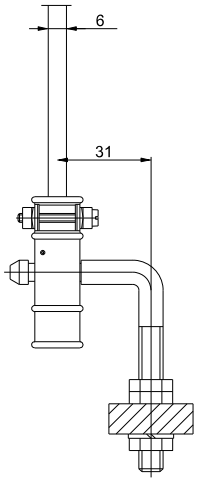

Linkage on the axle: 612 025 001

Settings

After installation of the valve and connecting the pipe fittings the length of the connecting rod must be determined between axle and valve, after the vehicle chassis has been set at the desired height (vehicle manufacturer- specification). The raising of the frame or chassis to this desired height is reached by lifting the control lever to position "charging". By this process the air bel- lows are inflated with air.

On reaching the desired height the control lever must be positioned immediately in the lap position, which can be the horizontal position (dependent on version), and fix it with a locking pin (d=4H8) on housing and on bore of the spindle. The actual length of the connecting rod between the linkage to axle and the linkage at the control lever can now be determined, and the connecting rod can be fastened. The connecting rod is to be connected using the rubber linkages and fastened with the hose clamps supplied

LAST OF ALL: (REMOVE LOCKING PIN)

After removal of the retaining ring it is possible to remove the plastic pipe by pushing the clamp ring in. (e.g. to replace valve).

Ex-factory the lap position is set horizontal to the control lever (excluding versions 612 036 001 / 051 001 / 011. If not in the lap position it can be adjusted to the horizontal position by the following method:

To lock the lap position, use pin d=4H8 x 20 DIN 7 to fix spindle as well as linkage (d= 6 mm) in horizontal position. Remove the rubber boot and filter pad. With a screwdriver turn the valve tappet so far, that neither a rise nor drop in pressure occurs. As an alternative an adjustment at the linkage to axle 612 025 001 is possible: loosen counter nut and shift angles at the axle bracket accordingly. Tighten locknut again.

Testing

If defects are noted during vehicle examinations or when driving, then the unit should be exchanged. When working with high pressure cleaners a distance of at least 50 cm should be observed. Missing exhaust caps are to be renewed.

Check function and leak - tightness of the unit. In the lap position at the delivery ports 21, 22 neither rise of pressure nor drop of pressure should result. Free movement and condition of the linkage is to be checked, bent or welded linkages are to be exchanged. Brittle or hardened rubber pieces are to be renewed.

Technical data

Operating pressure, dyn.:	p_e max. 13 bar
permitted dyn.bellow pressure:	p_e max. 20 bar
Operating temperature:	- 45°C to + 85°C
Operating range (charging - and exhausting):	45°
Side of control:	on the left and on the right
Dead angle at 7 - 8 bars:	2°
Port description:	1 = inlet port 2 = delivery port 3 = exhaust

Haldex develops and provides reliable and innovative solutions with focus on brake and air suspension products to the global commercial vehicle industry.
Listed on the Stockholm Stock Exchange, Haldex has annual sales of approximately 4.4 billion SEK and employs about 2,235 people.

©2015, Haldex AB. This material may contain Haldex trademarks and third party trademarks, trade names, corporate logos, graphics and emblems which are the property of their respective companies. The contents of this document may not be copied, distributed, adapted or displayed for commercial purposes or otherwise without prior written consent from Haldex.

Innovative Vehicle Solutions

Austria
Haldex Wien Ges.m.b.H.
Vienna
Tel.: +43 1 8 69 27 97
Fax: +43 1 8 69 27 97 27
E-Mail: info.at@haldex.com

Belgium
Haldex N.V.
Balegem
Tel.: +32 9 363 90 00
Fax: +32 9 363 90 09
E-Mail: info.be@haldex.com

Brazil
Haldex do Brasil Ind. E Com. Ltda
São José dos Campos
Tel.: +55 12 3935 4000
Fax: +55 12 3935 4018
E-Mail: info.brasil@haldex.com

Canada
Haldex Ltd
Cambridge, Ontario
Tel.: +1 519 621 6722
Fax: +1 519 621 3924
E-Mail: info.ca@haldex.com

China
Haldex Vehicle Products Co. Ltd.
Suzhou
Tel.: +86 512 8885 5301
Fax: +86 512 8765 6066
E-Mail: info.cn@haldex.com

France
Haldex Europe SAS
Weyersheim
Tel.: +33 3 88 68 22 00
Fax: +33 3 88 68 22 09
E-Mail: info.eur@haldex.com

Germany
Haldex Brake Products GmbH
Heidelberg
Tel.: +49 6 221 7030
Fax: +49 6 221 703400
E-Mail: info.de@haldex.com

Hungary
Haldex Hungary Kft
Szentlörinckáta
Tel.: +36 29 631 400
Fax: +36 29 631 401
E-Mail: info.hu.eu@haldex.com

India
Haldex India Limited
Nashik
Tel.: +91 253 66 99 501
Fax: +91 253 23 80 729

Italy
Haldex Italia Srl.
Biassono
Tel.: +39 039 47 17 02
Fax: +39 039 27 54 309
E-Mail: info.it@haldex.com

Korea
Haldex Korea Ltd.
Seoul
Tel.: +82 2 2636 7545
Fax: +82 2 2636 7548
E-Mail: info.hkr@haldex.com

Mexico
Haldex de Mexico S.A. De C.V.
Monterrey
Tel.: +52 81 8156 9500
Fax: +52 81 8313 7090

Poland
Haldex Sp. z.o.o.
Praszka
Tel.: +48 34 350 11 00
Fax: +48 34 350 11 11
E-Mail: info.pl@haldex.com

Russia
OOO "Haldex RUS"
Moscow
Tel.: +7 495 747 59 56
Fax: +7 495 786 39 70
E-Mail: info.ru@haldex.com

Spain
Haldex España S.A.
Granollers
Tel.: + 34 93 84 07 239
Fax: + 34 93 84 91 218
E-Mail: info.es@haldex.com

Sweden
Haldex Brake Products AB
Landskrona
Tel.: +46 418 47 60 00
Fax: +46 418 47 60 01
E-Mail: info.se@haldex.com

United Kingdom
Haldex Ltd.
Newton Aycliffe
Tel.: +44 1325 310 110
Fax: +44 1325 311 834
E-Mail: info.gbay@haldex.com

Haldex Brake Products Ltd.
MIRA Technology Park
Tel.: +44 2476 400 300
Fax: +44 2476 400 301
E-Mail: info.gbre@haldex.com

USA
Haldex Brake Products Corp.
Kansas City
Tel.: +1 816 891 2470
Fax: +1 816 891 9447
E-Mail: info.us@haldex.com

www.haldex.com

006 700 066_EN /10.15/Haldex EUR