SAF Holland Group

FIT FOR FLEETS

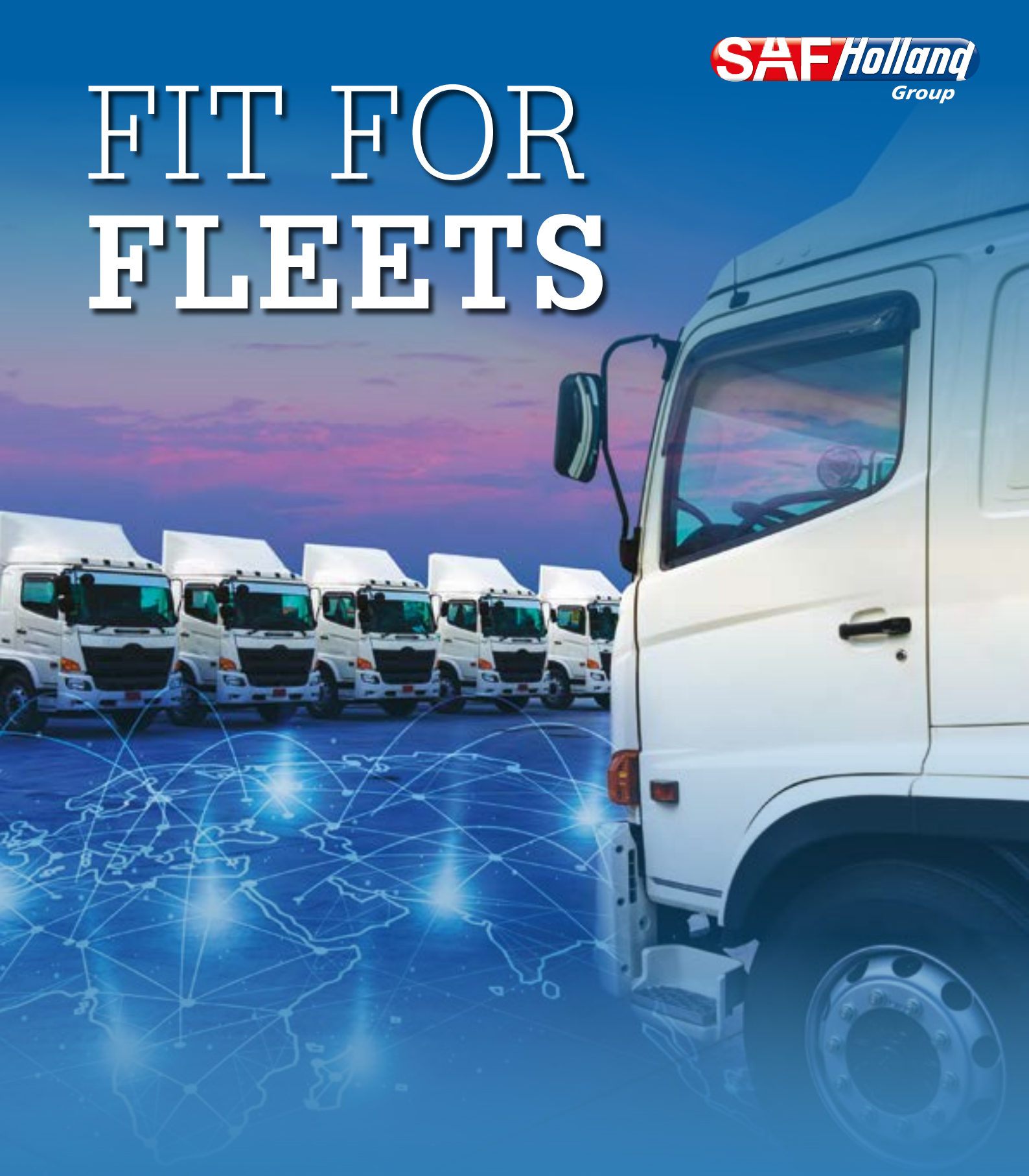

We keep your business rolling

Haldex develops reliable and innovative solutions that improves safety, vehicle dynamics and environmental sustainability in the commercial vehicle industry. We are one of the world-leading suppliers and are developing new technology for electrical and autonomous vehicles.

Haldex

www.haldex.com

SUMMARY



EBS 8 > 36

- EB+4.0: Not only a new generation 8
- EB+4.0 EBS: Technical information 10
- EB+4.0: Be safe and secure 12
- EB+4.0: Aftermarket part numbers 14
- Notes 15
- EB+4.0: 3M Full trailer TEM+ FTV braking schematic 16
- EB+4.0: 2M with TEM+ braking schematic 18
- EB+4.0: Double circuits, COLAS+ and ILAS-E+ 20
- EB+4.0: Main Cables 22
- EB+4.0: Features 24
- EB+GEN3: 3M technical information 26
- EB+GEN3: 2M with TEM braking schematic 28
- EB+GEN3: 2M technical information 30
- EB+GEN1 to Gen3 conversion kit 32
- EB+GEN3: QRV repair kit quick service guide 34
- EB+ CAN Hub technical information 36

TEM/TrCM 40 > 46

- Safe Parking 40
- TEM: Safe Parking braking schematic 42
- TEM+: 2M with TEM+ braking schematic 44
- TrCM-TrCM+: Safe Parking braking schematic 46

Actuators 50 > 52

- Life Seal+: Durability is king 50
- Notes 52

Disc Brakes 56 > 58

- 2 in 1 Haldex solution 56
- ModulX & ModulT the service friendly disc brakes 58

Suspension 64 > 68

- ILAS-E+: Technical information 64
- COLAS+ single: Technical information 66
- COLAS+ dual: Technical information 68

Features 72 > 78

- EB+ Soft Docking: Many safe returns 72
- TPMS 2.0: Under pressure 74
- TPMS 2.0: Under pressure 76
- EB+ Info Centre: Trailer diagnostic unit 78

Services 81 > 85

- Trailer Application Guide 81
- Trailer product overview 82
- Technical support 84
- Distributors & Service Centres 85

At your service 87 > 92

- Social media 87
- Notes 88
- Notes 90
- Contact 92

SUMMARY

CALENDAR
2025 > 2027

January

	Mon	Tue	Wed	Thu	Fri	Sat	Sun
1			1	2	3	4	5
2	6	7	8	9	10	11	12
3	13	14	15	16	17	18	19
4	20	21	22	23	24	25	26
5	27	28	29	30	31		

February

	Mon	Tue	Wed	Thu	Fri	Sat	Sun
5						1	2
6	3	4	5	6	7	8	9
7	10	11	12	13	14	15	16
8	17	18	19	20	21	22	23
9	24	25	26	27	28		

March

	Mon	Tue	Wed	Thu	Fri	Sat	Sun
9						1	2
10	3	4	5	6	7	8	9
11	10	11	12	13	14	15	16
12	17	18	19	20	21	22	23
13	24	25	26	27	28	29	30
14	31						

April

	Mon	Tue	Wed	Thu	Fri	Sat	Sun
14		1	2	3	4	5	6
15	7	8	9	10	11	12	13
16	14	15	16	17	18	19	20
17	21	22	23	24	25	26	27
18	28	29	30				

May

	Mon	Tue	Wed	Thu	Fri	Sat	Sun
18				1	2	3	4
19	5	6	7	8	9	10	11
20	12	13	14	15	16	17	18
21	19	20	21	22	23	24	25
22	26	27	28	29	30	31	

June

	Mon	Tue	Wed	Thu	Fri	Sat	Sun
22							1
23	2	3	4	5	6	7	8
24	9	10	11	12	13	14	15
25	16	17	18	19	20	21	22
26	23	24	25	26	27	28	29
27	30						

July

	Mon	Tue	Wed	Thu	Fri	Sat	Sun
27		1	2	3	4	5	6
28	7	8	9	10	11	12	13
29	14	15	16	17	18	19	20
30	21	22	23	24	25	26	27
31	28	29	30	31			

August

	Mon	Tue	Wed	Thu	Fri	Sat	Sun
31					1	2	3
32	4	5	6	7	8	9	10
33	11	12	13	14	15	16	17
34	18	19	20	21	22	23	24
35	25	26	27	28	29	30	31

September

	Mon	Tue	Wed	Thu	Fri	Sat	Sun
36	1	2	3	4	5	6	7
37	8	9	10	11	12	13	14
38	15	16	17	18	19	20	21
39	22	23	24	25	26	27	28
40	29	30					

October

	Mon	Tue	Wed	Thu	Fri	Sat	Sun
40			1	2	3	4	5
41	6	7	8	9	10	11	12
42	13	14	15	16	17	18	19
43	20	21	22	23	24	25	26
44	27	28	29	30	31		

November

	Mon	Tue	Wed	Thu	Fri	Sat	Sun
44						1	2
45	3	4	5	6	7	8	9
46	10	11	12	13	14	15	16
47	17	18	19	20	21	22	23
48	24	25	26	27	28	29	30

December

	Mon	Tue	Wed	Thu	Fri	Sat	Sun
49	1	2	3	4	5	6	7
50	8	9	10	11	12	13	14
51	15	16	17	18	19	20	21
52	22	23	24	25	26	27	28
1	29	30	31				

January

	Mon	Tue	Wed	Thu	Fri	Sat	Sun
1				1	2	3	4
2	5	6	7	8	9	10	11
3	12	13	14	15	16	17	18
4	19	20	21	22	23	24	25
5	26	27	28	29	30	31	

February

	Mon	Tue	Wed	Thu	Fri	Sat	Sun
5							1
6	2	3	4	5	6	7	8
7	9	10	11	12	13	14	15
8	16	17	18	19	20	21	22
9	23	24	25	26	27	28	

March

	Mon	Tue	Wed	Thu	Fri	Sat	Sun
9							1
10	2	3	4	5	6	7	8
11	9	10	11	12	13	14	15
12	16	17	18	19	20	21	22
13	23	24	25	26	27	28	29
14	30	31					

April

	Mon	Tue	Wed	Thu	Fri	Sat	Sun
14			1	2	3	4	5
15	6	7	8	9	10	11	12
16	13	14	15	16	17	18	19
17	20	21	22	23	24	25	26
18	27	28	29	30			

May

	Mon	Tue	Wed	Thu	Fri	Sat	Sun
18					1	2	3
19	4	5	6	7	8	9	10
20	11	12	13	14	15	16	17
21	18	19	20	21	22	23	24
22	25	26	27	28	29	30	31

June

	Mon	Tue	Wed	Thu	Fri	Sat	Sun
23	1	2	3	4	5	6	7
24	8	9	10	11	12	13	14
25	15	16	17	18	19	20	21
26	22	23	24	25	26	27	28
27	29	30					

July

	Mon	Tue	Wed	Thu	Fri	Sat	Sun
27			1	2	3	4	5
28	6	7	8	9	10	11	12
29	13	14	15	16	17	18	19
30	20	21	22	23	24	25	26
31	27	28	29	30	31		

August

	Mon	Tue	Wed	Thu	Fri	Sat	Sun
31						1	2
32	3	4	5	6	7	8	9
33	10	11	12	13	14	15	16
34	17	18	19	20	21	22	23
35	24	25	26	27	28	29	30
36	31						

September

	Mon	Tue	Wed	Thu	Fri	Sat	Sun
36		1	2	3	4	5	6
37	7	8	9	10	11	12	13
38	14	15	16	17	18	19	20
39	21	22	23	24	25	26	27
40	28	29	30				

October

	Mon	Tue	Wed	Thu	Fri	Sat	Sun
40				1	2	3	4
41	5	6	7	8	9	10	11
42	12	13	14	15	16	17	18
43	19	20	21	22	23	24	25
44	26	27	28	29	30	31	

November

	Mon	Tue	Wed	Thu	Fri	Sat	Sun
44							1
45	2	3	4	5	6	7	8
46	9	10	11	12	13	14	15
47	16	17	18	19	20	21	22
48	23	24	25	26	27	28	29
49	30						

December

	Mon	Tue	Wed	Thu	Fri	Sat	Sun
49		1	2	3	4	5	6
50	7	8	9	10	11	12	13
51	14	15	16	17	18	19	20
52	21	22	23	24	25	26	27
1	28	29	30	31			

January

	Mon	Tue	Wed	Thu	Fri	Sat	Sun
53					1	2	3
1	4	5	6	7	8	9	10
2	11	12	13	14	15	16	17
3	18	19	20	21	22	23	24
4	25	26	27	28	29	30	31

February

	Mon	Tue	Wed	Thu	Fri	Sat	Sun
5	1	2	3	4	5	6	7
6	8	9	10	11	12	13	14
7	15	16	17	18	19	20	21
8	22	23	24	25	26	27	28

March

	Mon	Tue	Wed	Thu	Fri	Sat	Sun
9	1	2	3	4	5	6	7
10	8	9	10	11	12	13	14
11	15	16	17	18	19	20	21
12	22	23	24	25	26	27	28
13	29	30	31				

April

	Mon	Tue	Wed	Thu	Fri	Sat	Sun
13				1	2	3	4
14	5	6	7	8	9	10	11
15	12	13	14	15	16	17	18
16	19	20	21	22	23	24	25
17	26	27	28	29	30		

May

	Mon	Tue	Wed	Thu	Fri	Sat	Sun
17						1	2
18	3	4	5	6	7	8	9
19	10	11	12	13	14	15	16
20	17	18	19	20	21	22	23
21	24	25	26	27	28	29	30
22	31						

June

	Mon	Tue	Wed	Thu	Fri	Sat	Sun
22		1	2	3	4	5	6
23	7	8	9	10	11	12	13
24	14	15	16	17	18	19	20
25	21	22	23	24	25	26	27
26	28	29	30				

July

	Mon	Tue	Wed	Thu	Fri	Sat	Sun
26				1	2	3	4
27	5	6	7	8	9	10	11
28	12	13	14	15	16	17	18
29	19	20	21	22	23	24	25
30	26	27	28	29	30	31	

August

	Mon	Tue	Wed	Thu	Fri	Sat	Sun
30							1
31	2	3	4	5	6	7	8
32	9	10	11	12	13	14	15
33	16	17	18	19	20	21	22
34	23	24	25	26	27	28	29
35	30	31					

September

	Mon	Tue	Wed	Thu	Fri	Sat	Sun
35			1	2	3	4	5
36	6	7	8	9	10	11	12
37	13	14	15	16	17	18	19
38	20	21	22	23	24	25	26
39	27	28	29	30			

October

	Mon	Tue	Wed	Thu	Fri	Sat	Sun
39					1	2	3
40	4	5	6	7	8	9	10
41	11	12	13	14	15	16	17
42	18	19	20	21	22	23	24
43	25	26	27	28	29	30	31

November

	Mon	Tue	Wed	Thu	Fri	Sat	Sun
44	1	2	3	4	5	6	7
45	8	9	10	11	12	13	14
46	15	16	17	18	19	20	21
47	22	23	24	25	26	27	28
48	29	30					

December

	Mon	Tue	Wed	Thu	Fri	Sat	Sun
48			1	2	3	4	5
49	6	7	8	9	10	11	12
50	13	14	15	16	17	18	19
51	20	21	22	23	24	25	26
52	27	28	29	30	31		

In our experience, Haldex systems are the most reliable, and easy to use and maintain.

TSW & Assets Manager,
DFDS

EBS

EB+4.0: Not only a new generation 8

EB+4.0 EBS: Technical information 10

EB+4.0: Be safe and secure 12

EB+4.0: Aftermarket part numbers 14

Notes 15

EB+4.0: 3M Full trailer TEM+ FTV braking schematic 16

EB+4.0: 2M with TEM+ braking schematic 18

EB+4.0: Double circuits, COLAS+ and ILAS-E+ 20

EB+4.0: Main Cables 22

EB+4.0: Features 24

EB+GEN3: 3M technical information 26

EB+GEN3: 2M with TEM braking schematic 28

EB+GEN3: 2M technical information 30

EB+GEN1 to Gen3 conversion kit 32

EB+GEN3: QRV repair kit quick service guide 34

EB+ CAN Hub technical information 36

In our long-term relationship with Haldex we have experienced highly reliable products. People are easily accessible and we appreciate the direct support when needed.

Sebastian Dreblow,
L.I.T. AG

EB+4.0

NOT ONLY
A NEW GENERATION



It’s much more than that.
More flexibility for your trailer

A new trailer brake control system that brings parking brake control into electronic management, offers customers a new modular approach to specification as well as customisable application software.



EB+4.0 main features:

- Designed as multi-voltage system to cover application with 12 and 24 volt systems
- Serves as a global platform for different product families: EBS, ABS with roll-over-control and conventional ABS for trailers
- Allows configurations up to 8S/4Mfor road trains and special applications
- Application software is independent of the main brake control software
- Override solenoid suspends application of emergency brakes with driver warning and functional CAN communication
- Allows remote mobilization of the trailer when connected to telematics
- Allows release of spring brake only under safe conditions (Safe Parking+)

Part Number	EBS Description	Emergency Override	AUX Ports	Wheel speed sensors	Mobiliser
842 005 001	Basic	No	3	2	No
842 006 001	Basic	No	3	2	Pneum.
842 001 001	Basic	Yes	4	2	No
842 002 001	Basic	Yes	4	2	Pneum./ Electr.
842 003 001	Premium	Yes	6	4	No
842 004 001	Premium	Yes	6	4	Pneum./ Electr.

Benefits

The EB+4.0 can be equipped with a mobiliser function. This feature allows the release of the spring brakes only under certain pre-determined conditions and can be particularly useful in conjunction with telematics. The mobiliser also enables a so-called Safe Parking+ feature that allows spring brake release only when the system is fully charged and the yellow line pressurised.

The emergency override feature suspends emergency brake applications caused by red line break, with driver warning, so that the driver can safely stop the vehicle with full system function.

EB+ 4.0: NOT ONLY A NEW GENERATION

EB+4.0 EBS: TECHNICAL INFORMATION



EB+ 4.0 EBS

The EB+4.0 EBS trailer brake platform utilises a modular design strategy, where several separate functional modules can be configured into a system with the desired functional scope.

For example, the EB+4.0 can be equipped with a Safe Parking+ feature and Emergency Override feature.

The EB+4.0 EBS is a 12 / 24V system with integrated roll-over control, intended for fitment to semi and centre axle trailers using air braking systems with air / mechanical suspension.

EB+4.0 EBS



Specifications

The table gives you an overview of the three main EBS variants, with their options and features.in general, there are two main 2M systems of Basic or Premium configuration.

Compared to the Premium configuration, the Basic system supports a limited number of electrical auxiliary ports and only two wheel-speed inputs, but in general offers similar available options such as mobiliser or pressure protection valve.

There are two Basic versions of the EB+ 4.0. One 'with' and one 'without' the emergency override function. Apart from the override, the Basic without override does not have AUX 0.

There is a 1M EBS Slave that can be used with the Premium version to create 3M or 4M system layouts.

Benefits

- Easy, logical vehicle installation
- Multi-voltage operation
- Flexibility, with up to 6 input / output channels, 2 dedicated analogue channels and 4 dedicated digital inputs
- Connect multiple CAN devices, e.g. TPMS, EB+ Info Centre and telematics…

Design and Function

Premium with mobiliser assembly

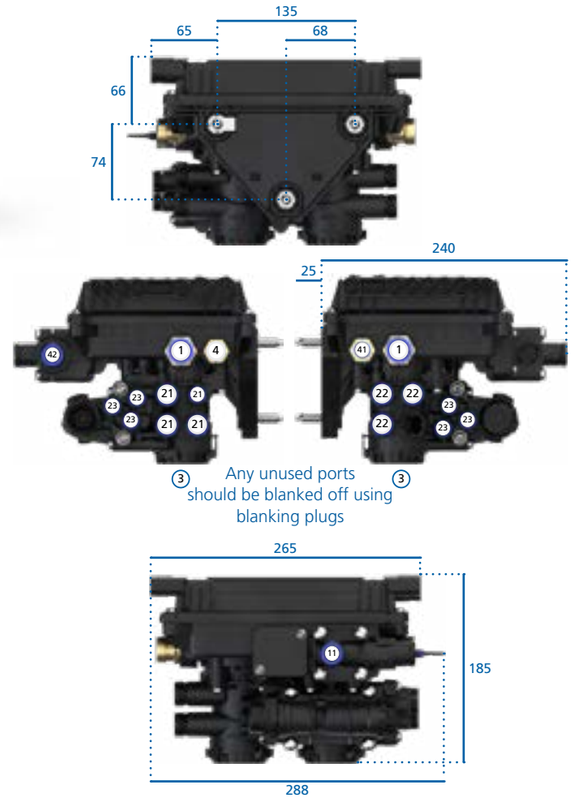

Function		Basic EBS (Without emergency overide)	Basic EBS	Premium EBS
Electronics	Sensor (S) / Modulator (M)	2S / 2M	2S / 2M	2S / 2M 6S / 3M 4S / 2M 8S / 4M 4S / 3M
	Power	Pwr-A & Pwr-B	Pwr-A & Pwr-B	Pwr-A & Pwr-B
	AUX 0-5	1, 4 & 5	0, 1, 4 & 5	0-5
	Wheel speed sensors	2	2	4
	Haldex CAN	Y	Y	Y
	Slave CAN	N	N	Y
	Telematics CAN	Option	Option	Option
	Pressure protection valve	N	N	Future option
	Pneumatic AUX	N	N	Future option
Spring Brake	Spring brake control	Y	Y	Y
	Spring pressure maintenance	Y	Y	Y
	Emergency override	N	Y	Y
	Latch / mobiliser	Option (Pneumatic only)	Option	Option

EB+ 4.0 EBS: TECHNICAL INFORMATION

EB+4.0
BE SAFE **AND SECURE**



The product is so modular that we built some useful and standard kits, for your everyday needs.

EB+ 4.0 2S/2M

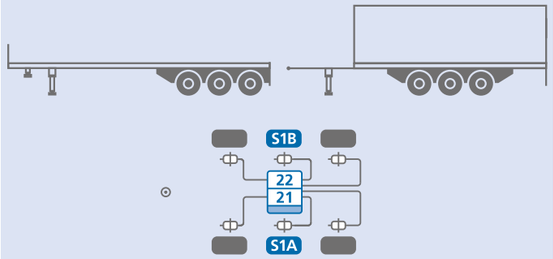

Basic Brake Kit with Safe Parking (without emergency override)

950 800 923

Part number	Qty	Description
842 005 011	1	EB+ 4.0 2M basic, no emergency override, spring brake control valve with 4 ports, port 11 8 mm fitting
844 001 120	1	EB+ 4.0 power A to 24V ISO7638 - 12m
844 401 030	2	EB+ 4.0 sensor extension cable - 3m
352 079 001	1	TEM+, pressure protection valve, Safe Parking

Basic Brake kit (with emergency override)

950 800 924

Part number	Qty	Description
842 001 011	1	EB+ 4.0 2M basic, with emergency override, spring brake control valve with 4 ports, port 11 8 mm fitting
844 001 120	1	EB+ 4.0 power A to 24V ISO7638-12m
844 401 030	2	EB+ 4.0 sensor extension cable - 3m
352 078 001	1	TEM+, PPV

Basic Brake kit with Safe Parking (with emergency override)

950 800 925

Part number	Qty	Description
842 001 011	1	EB+ 4.0 2M basic, with emergency override, spring brake control valve with 4 ports, port 11 8 mm fitting
844 001 120	1	EB+ 4.0 power A to 24V ISO7638 - 12m
844 401 030	2	EB+ 4.0 sensor extension cable - 3m
352 079 001	1	TEM+, pressure protection valve, Safe Parking

EB+ 4.0 4S/2M

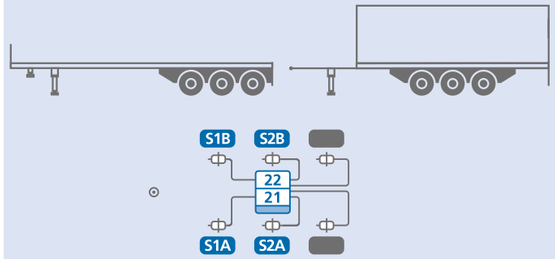

Premium Brake kit (without Safe Parking)

950 800 926

Part number	Qty	Description
842 003 011	1	EB+ 4.0 2M Premium, with emergency override, spring brake control valve with 4 ports, port 11 8 mm fitting
844 001 120	1	EB+ 4.0 power A to 24V ISO7638 - 12m
844 401 030	2	EB+ 4.0 sensor extension cable - 3m
844 401 060	2	EB+ 4.0 sensor extension cable - 6m
352 078 001	1	TEM+, pressure protection valve

Premium Brake kit (with Safe Parking)

950 800 927

Part number	Qty	Description
842 003 011	1	EB+ 4.0 2M premium, with emergency override, spring brake control valve with 4 ports, port 11 8 mm fitting
844 001 120	1	EB+ 4.0 power A to 24V ISO7638-12m
844 401 030	2	EB+ 4.0 sensor extension cable - 3m
844 401 060	2	EB+ 4.0 sensor extension cable - 6m
352 079 001	1	TEM+, pressure protection valve, Safe Parking

EB+ 4.0 6S/3M

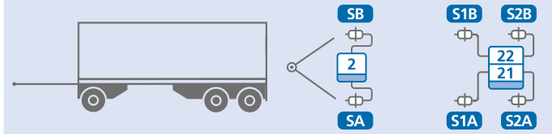

Brake kit (with Safe Parking)

950 800 928

Part number	Qty	Description
842 003 011	1	EB+ 4.0 2M Premium, with emergency over-ride, spring brake control valve with 4 ports, port 11 8 mm fitting
841 001 001	1	EB+ 4.0 1M slave 3 port
844 021 120	1	EB+ 4.0 power A to 24V ISO7638-12m- plug
844 501 100	1	EB+ 4.0 link cable-10m
844 401 030	4	EB+ 4.0 sensor extension cable - 3m
844 401 020	2	EB+ 4.0 sensor extension cable - 2m
352 083 001	1	TEM+ , Full trailer valve, Safe Parking

EB+ 4.0: BE SAFE AND SECURE

EB+ 4.0 AFTERMARKET PART NUMBERS

The following EB+ 4.0 Aftermarket (AM) part numbers are now available.

EB+ 4.0 OE part no.	Description OE part	EB+ 4.0 AM part no.	Description AM part
842 005 001	2M Basic, w/o OR, 6 Port SBCV	**942 015 001**	2M Basic+, w/o OR, 6 Port SBCV, AM
842 005 011	2M Basic, w/o OR, 4 Port SBCV		
842 015 001	2M Basic+, w/o OR, 6 Port SBCV		
842 015 011	2M Basic+, w/o OR, 4 Port SBCV		
842 001 001	2M Basic, 6 Port SBCV	**942 011 001**	2M Basic+, 6 Port SBCV, AM
842 001 011	2M Basic, 4 Port SBCV		
842 011 001	2M Basic+, 6 Port SBCV		
842 003 001	2M Premium, 6 Port SBCV	**942 013 001**	2M Premium+, 6 Port SBCV, AM
842 003 011	2M Premium, 4 Port SBCV		
842 013 001	2M Premium+, 6 Port SBCV		
842 013 011	2M Premium+, 4 Port SBCV		
842 011 121	2M Basic+, 4 Port SBCV, 4 Port PPV	**942 011 121**	2M Basic+, 4 Port SBCV, 4 Port PPV, AM
842 013 131	2M Premium+, 6 Port SBCV, 4 Port PPV	**942 013 131**	2M Premium+, 6 Port SBCV, 4 Port PPV, AM
842 011 811	2M Basic+, 4 Port SBCV, 16mm P1	**942 011 811**	2M Basic+, 4 Port SBCV, 16mm P1, AM
842 011 401	2M Basic+, 6 Port SBCV, 18mm P1	**942 011 401**	2M Basic+, 6 Port SBCV, 18mm P1, AM

KEYS:

- **w/o:** Without
- **OR:** Override
- **SBCV:** Spring Brake Control Valve
- **PPV:** Pressure Protection Valve
- **P1:** Port 1
- **OE:** Original Equipment
- **AM:** Aftermarket

NOTES

EB+4.0 3M FULL TRAILER TEM+ FTV BRAKING SCHEMATIC

More information

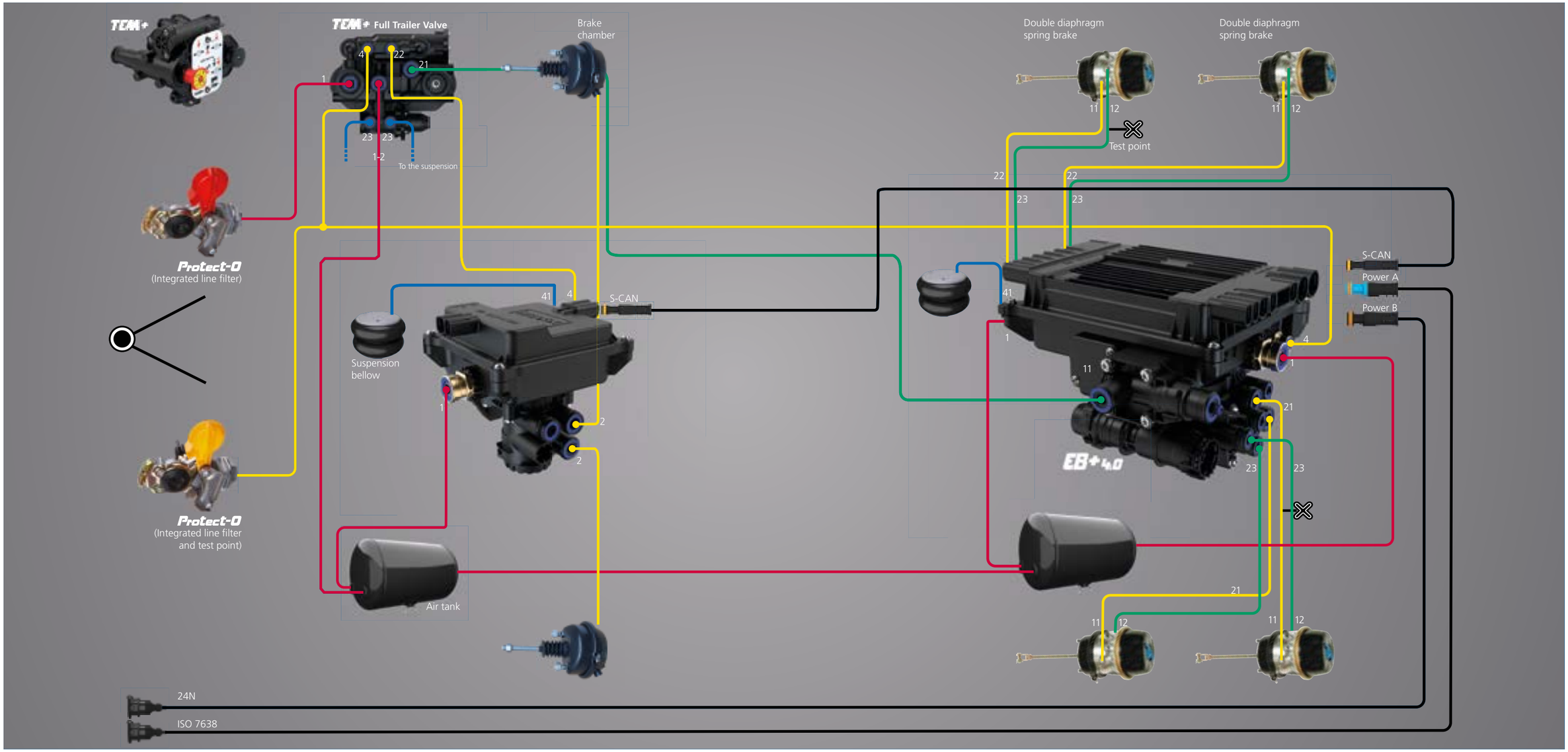

Légend

- Emergency
- Service brake
- Parking brake
- Air suspension
- Power supply

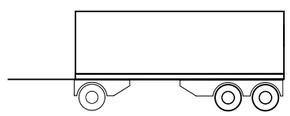

EB+4.0: 3M FULL TRAILER TEM+ FTV BRAKING SCHEMATIC

EB+4.0
2M WITH TEM+
BRAKING SCHEMATIC

More information

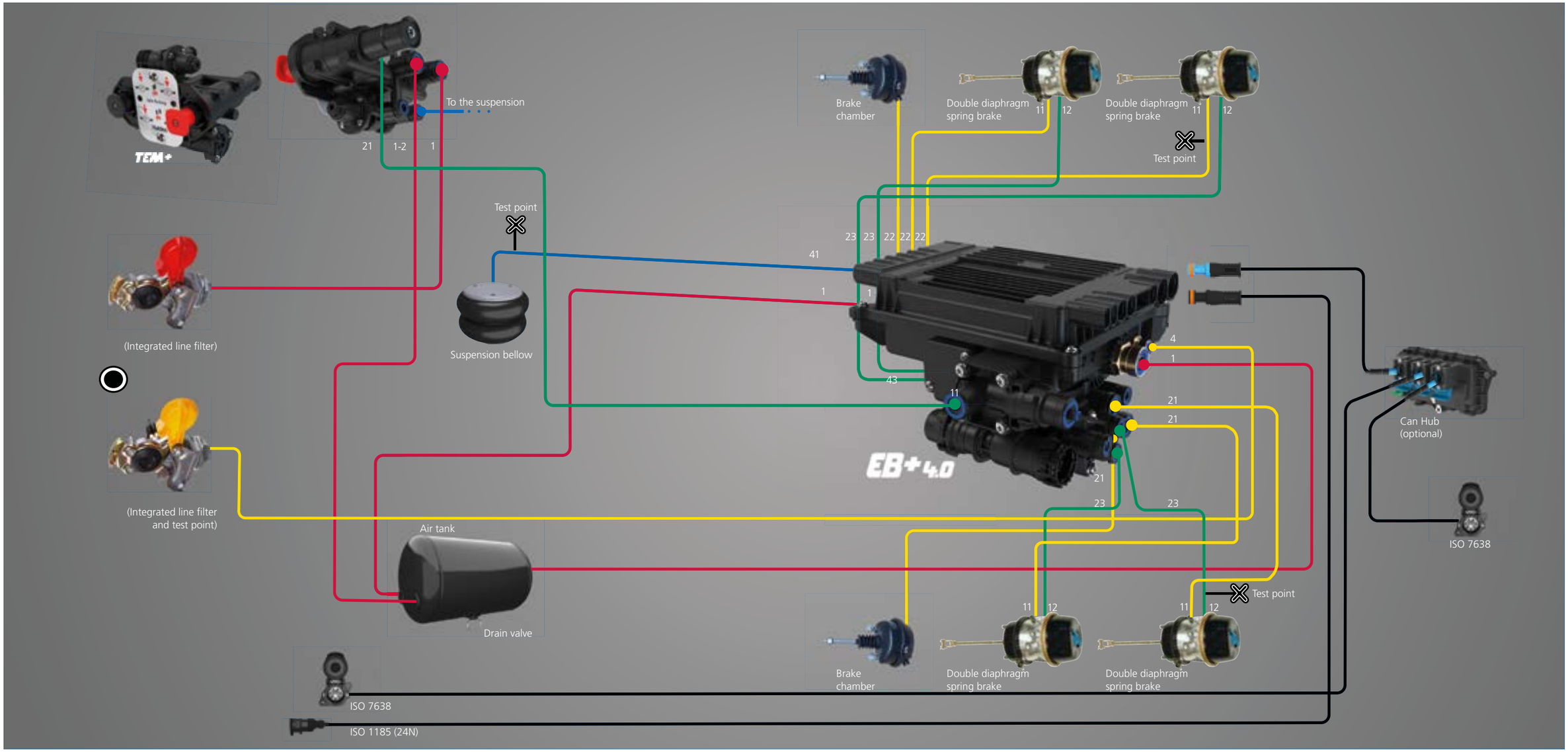

Légend

- Emergency & Air Supply
- Service brake
- Parking brake
- Air suspension
- Power supply

EB+4.0: 2M WITH TEM+ BRAKING SCHEMATIC

EB+4.0
DOUBLE CIRCUITS, **COLAS+** AND **ILAS-E+**

More information

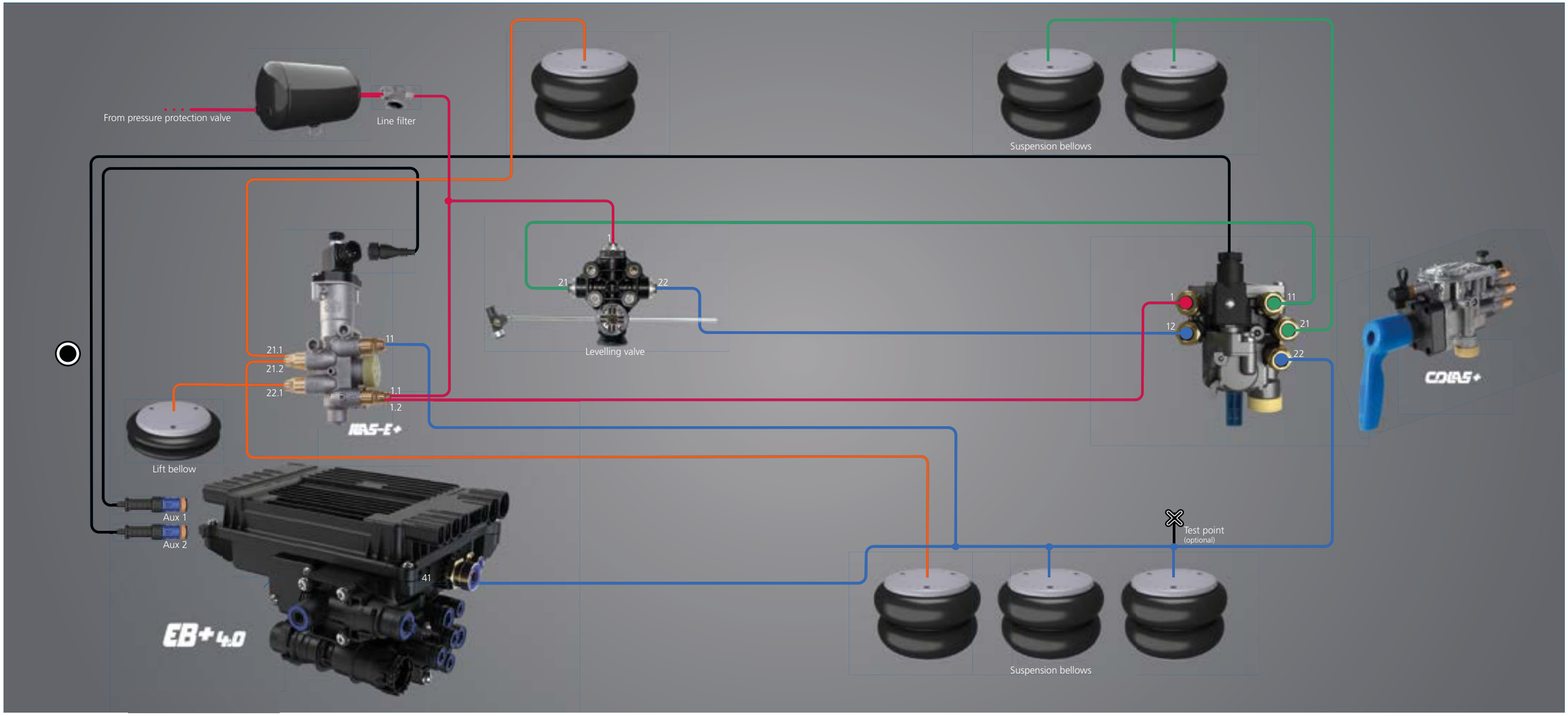

Légend

- Supply
- Lift Axle
- Right hand
- Left hand
- Power supply

EB+4.0 Main Cables

MASTER VALVE DESCRIPTION

Variant	Part number	S-CAN	T-CAN	Wheel speed sensor connection	Aux Out	Aux In
Basic	842 005 xxx	No	No	2	Aux1	A x4 Aux5 Super Aux A, B, C
Basic +	842 015 xxx	No	Yes	2		
Basic override	842 001 xxx	No	No	2	Aux0 Aux1	
Basic override +	842 011 xxx	No	Yes	2		
Premium	842 003 xxx	Yes	No	4	Aux0 Aux1 Aux2 Aux3	
Premium +	842 013 xxx	Yes	Yes	4		

Each Aux output connector can control up to two output functions, for example COLAS RtR and Speed lock on Aux1.

Use Aux splitter cable to control 2 valves from 1 Aux connector (ie. Premium EB+ 4.0 has 8 possible Aux outputs).

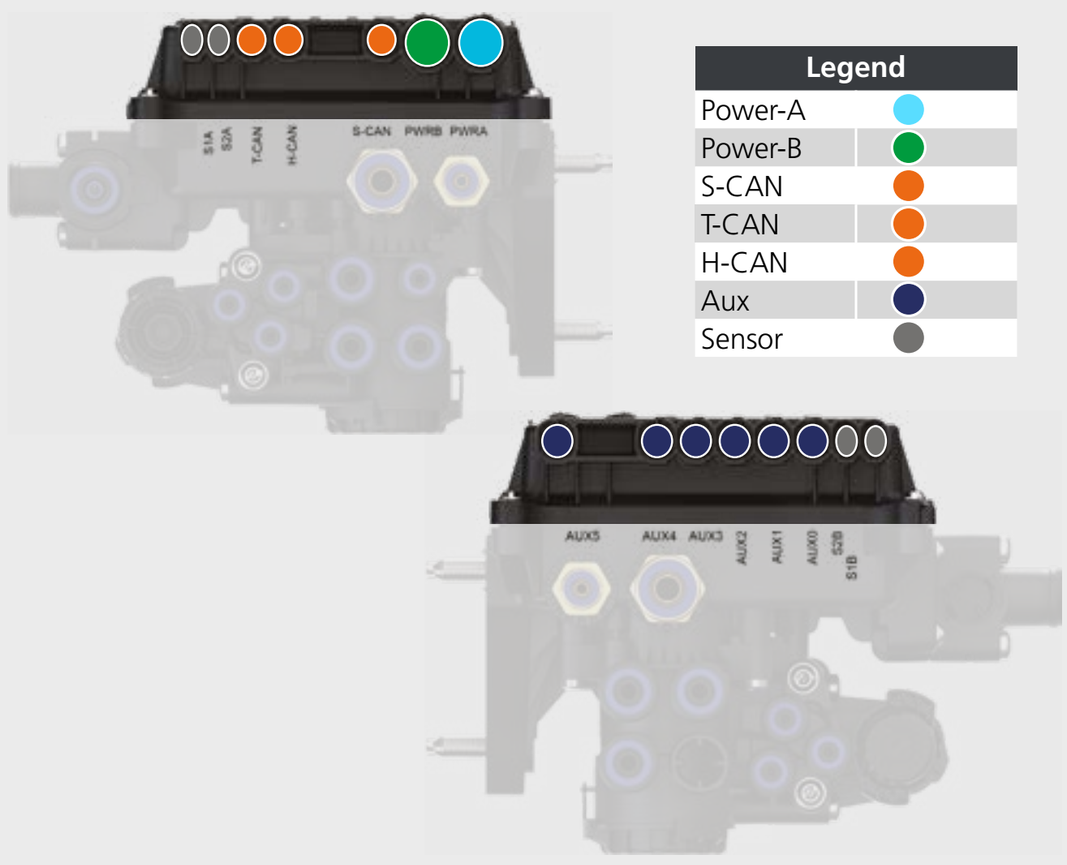

Legend	
Power-A	
Power-B	
S-CAN	
T-CAN	
H-CAN	
Aux	
Sensor	

TRAILER APPLICATION GUIDE

Further information are available on Trailer Application Guide :

› Up-to-date list of variants
› Drawings and advanced description
› ADR reports
› Diagnostic help

ISO 7638 to **Power-A** - Semi-trailer

Part number	Length (m)
844 001 060	6
844 001 090	9
844 001 120	12
844 001 140	14
844 001 160	16
844 001 180	18



ISO 7638 to **Power-A** - Semi-trailer Kit

Part number	Length (m)
844 003 120	12



ISO 7638 to **Power-A** - Trailer

Part number	Length (m)
844 021 090	9
844 021 120	12
844 021 150	15
844 021 180	18



ISO 7638 to **Power-A** - Open-end

Part number	Length (m)
844 101 015	1.5
844 101 050	5
844 101 130	13
844 101 140	14
844 101 160	16



DIN to **Power-A**

Part number	Length (m)
844 111 015	1.5
844 111 120	12
844 111 130	13



CAN to **CAN**

Part number	Length (m)
844 501 030	3
844 501 050	5
844 501 080	8
844 501 100	10
844 501 120	12
844 501 140	14



DIN to **CAN** (Telematic)

Part number	Length (m)
844 521 010	1
844 521 120	12



Open end to **CAN**

Part number	Length (m)
844 561 010	1
844 561 065	6,5



CAN splitter MFF

Part number	Length (m)
844 542 001	0,5



CAN splitter FFF

Part number	Length (m)
844 541 001	0,5



DIAGN to **CAN** (EB+ Info Centre)

Part number	Length (m)
844 551 005	0.5
844 551 010	1
844 551 025	2.5
844 551 065	6.5
844 551 080	8
844 551 140	14



24N open end to **Power-B**

Part number	Length (m)
844 201 040	4
844 201 060	6
844 201 090	9
844 201 120	12
844 201 160	16



Super Aux + 24N open end to **Power-B**

Part number	Length (m)
844 221 060	6
844 221 090	9
844 221 120	12



24N DIN to **Power-B**

Part number	Length (m)
844 211 020	2
844 211 040	4



Super AUX + 24N to **Power-B**

Part number	Length (m)
844 231 010	1
844 231 060	6



DIN to **Aux**

Part number	Length (m)
844 321 010	1
844 321 020	2
844 321 030	3
844 321 050	5
844 321 060	6
844 321 070	7
844 321 100	10
844 321 180	18



Open end to **Aux**

Part number	Length (m)
844 301 010	1
844 301 020	2
844 301 040	4
844 301 070	7
844 301 100	10
844 301 120	12
844 301 180	18



Aux to **Aux**

Part number	Length (m)
844 331 010	1
844 331 040	4

Aux splitter MFF

Part number	Length (m)
844 342 001	0.5



Aux splitter FFF

Part number	Length (m)
844 341 001	0.5



Pressure sensor / switch to **Aux**

Part number	Length (m)
844 311 007	0,75
844 311 020	2
844 311 030	3
844 311 050	5
844 311 080	8
844 311 100	10
844 311 260	26



Wheel **Sensor** extension

Part number	Length (m)
844 401 020	2
844 401 030	3
844 401 040	4
844 401 060	6
844 401 080	8
844 401 100	10
844 401 120	12
844 401 140	14



Diagnostic ISO 7638 splitter

Part number	Length (m)
815 018 001	0.45



Diagnostic PC interface to **SOV**

Part number	Length (m)
814 011 001	6.5



Diagnostic PC interface to **CAN**

Part number	Length (m)
844 511 065	6,5
844 511 065	15
844 511 200	20



Diagnostic DIAG++ PC interface

Part number
950 800 909



Diagnostic FLEET++ PC interface

Part number
950 800 910



EB+ 4.0 Features



More information

DRIVER ASSISTANCE

TPMS 2.0

The **TPMS 2.0** system continuously measures the air pressure and temperature in the trailer tyres. Our new TPMS is compatible with EB+ 4.0 (and other) and is compliant with UN-R141.

Example for 3 axles single wheels kit : (1x 940 000 629) + (6x 950 800 941)

For twin wheels or configuration with more than 3 axles, see Trailer Application Guide.

Part number	Description	Comment
815 058 001	RCU	TPMS 2.0 Receiver (incl. Antenna)
844 534 012	Cable Terminated	If only TPMS 2.0 is connected to EBS
844 536 012	Cable Unterminated	If TPMS 2.0 and other CAN devices are connected
844 537 xxx	Cable 2nd RCU	To connect 2nd RCU
844 542 001	CAN splitter MFF	For 2 RCU connection
950 800 941	WUS kit (belt)	Contains 1 sensor plus 1 belt. For wheel size 17.5" to 24.5"
042 801 909	Valve mounted WUS	For wheel size 12" to 16"
815 072 005	Adaptor 7pin DIN plug	To connect TPMS 2.0 on WABCO / KNORR compatible EBS
815 073 005	Adaptor 7pin DIN socket	To connect TPMS 2.0 on KNORR compatible EBS
940 000 629	kit RCU + cable	Contains 815 058 001 + 844 534 012



EB+ Info Centre

The **EB+ Info Centre** installed on the trailer provides easy access to diagnostic data, odometer and other information, in multilanguages. Together with TPMS 2.0 it's the perfect match.

Part number	Description
815 041 001	Standard
815 046 001	ADR compliant (without battery)

Cable to use: DIAGN to CAN 844 551 xxx.



EB+ Soft Docking

EB+ Soft Docking helps to prevent damage: with visual and audio warnings, the brakes are automatically applied before hitting an obstacle.

Part number	Description	Application
940 000 603	2 sensors kit	Standard
940 000 604	3 sensors kit	Tank, Tipper

Other length, variants and connectors available, see Trailer Application Guide.



Lining Wear System (LWS)

The Haldex **Lining Wear System (LWS)** provides lining wear indication when the pad reaches the minimum lining thickness. For 3 axles applications.

Part number	Cable length (mm)
844 361 001	2.m / 2x2.5m / 2x3.5m / 2x 4.5m

Pad Wear Indicators part numbers, see Trailer Application Guide.



EB+ CAN Hub

The **EB+ CAN Hub** is an ISO11992 repeater / router for 12/24V applications. For long vehicles, Dollies and Towing trailers.

Part number	Description
815 057 001	ECU
814 003 xxx	ISO 7638 to Power A - Semi-trailer
814 004 xxx	ISO 7638 to Power A - Trailer
844 121 xxx	Power A to Power A
815 022 001	Pressure sensor (option)
844 311 xxx	Pressure sensor to Aux (option)



FIND THE RIGHT EBS VARIANT

To select the right EBS 4.0 reference, match the number of features required for your application with the appropriate configuration to ensure optimum performance and compatibility. EBS variants can cover from 1 to 8 auxiliary outputs. Find the most suitable part number for your application! e.g: 842011011 can manage up to 4 auxiliaries.

SUSPENSION CONTROL

ILAS-E+

ILAS-E+ is a single circuit lift axle valve for air suspension systems controlled by EB+.

Part number	Pneumatic Ports	Voltage	Cable to use
352 080 001	7 x Push-in 8x1	24	DIN to Aux 844 321 xxx
352 080 011	6 x Push-in 8x1	24	DIN to Aux 844 321 xxx
352 061 121	4 x M16	12	DIN to Aux 844 321 xxx



COLAS+

The well known **COLAS+** raise / lower valve for trailers which has an integrated high range of functions: Dead man's, Roll-on Roll-off, Reset to Ride height. Available in Single or Dual circuit.

Part number	Single	Dual	RtR	Dead man	RoRo	Voltage
338 061 201	✓	✗	✓	✓	✓	24
388 062 201	✓	✗	✓	✓	✓ + raising	24
338 071 101	✗	✓	✓	✓	✓	24
338 071 131	✗	✓	✓	✓	✓	24
338 071 161	✗	✓	✓	✓	✓	12

Cable to use: DIN to Aux 844 321 xxx.



PARK CONTROL

TEM+

TEM+ has been designed to match perfectly the EB+ 4.0 platform. Safety uncoupling and coupling of a trailer is enhanced by the unique Safe Parking function. Option such as Pressure Protection Valve and Full Trailer Valve can be selected.

Part number	PPV	Safe Parking	FTV
352 076 002	✗	✗	✗
352 077 002	✗	✓	✗
352 078 002	✓	✗	✗
352 079 002	✓	✓	✗
352 082 002	✓	✗	✓
352 083 002	✓	✓	✓

Aluminium plate included for all.



Electronic Height Sensor (EHS)

Electronic Height Sensor (EHS) for mechanical suspension vehicles.

Part number	Description
815 030 001	Sensor
003 575 709	Lever with linkage
612 025 001	Linkage on axle

Cable to use: DIN to Aux 844 321 xxx.

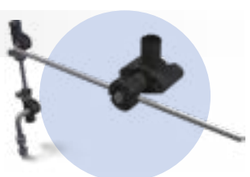

Switch Box

Switch Box will ease the activation of a Traction Assist, a forced steer axle, a safety function, Soft Release function and many others.

Part number	Description
844 351 070	Mounted in front of the chassis
844 352 070	Mounted behind the chassis

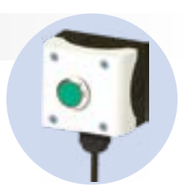

EB+ 4.0: FEATURES

EB+GEN3 3M TECHNICAL INFORMATION



Benefits

- Easy, logical vehicle installation.
- Multi-voltage operation.
- Flexibility, with up to 5 input/output channels, 2 dedicated analogue channels and
- 3 dedicated digital inputs.
- Load sensing for both Master and Slave to optimise brake efficiency and wear.
- Connect multiple CAN devices, e.g. TPMS, Info Centre or telematics.

EB+ Gen3 3M

EB+GEN3 3M is a 12/24V EBS with integrated roll-over control, intended for fitment to full, semi and centre axle trailers using full air braking systems with air/mechanical suspension. A top of the range configuration delivers EBS braking with integrated ABS, electronic load-sensing, multiple CAN, 3 modulator configuration, a range of other inputs/outputs to control other functions and now with stop lamp power backup.

Independent EBS for full, semi and centre axle trailers. The full EB+GEN3 3M system consisting of a EB+GEN3 2M Master and a 1M Slave (3 modulators in total), 4 sensors, more auxiliary connections than standard, integrated stability, maximum flexibility.

EB+GEN3 3M



Specifications

- Integrated quick release valve
- Integrated anti-compound valve
- Service brake test points
- Reservoir connections: 2 x Master, 1 x Slave
- ECU operates 8-32V
- External connections via up to 14 moulded plugs
- EMC/RFI approved
- Valve integrated with electronic load sensing and roll-over control
- Delivery and suspension M16 ports
- Reservoir M22 ports

Part Numbers

Gen3 Master assembly	823 034 001
Gen3 3M AM	950823IC3M
Gen3 Slave assembly	810 023 001
Gen3 Master & Slave Kit	823 028 001
Gen3 Master-Slave link cable (yellow connectors):	
2 m	814 041 011
5 m	814 041 021
8 m	814 041 051
10 m	814 041 041
12 m	814 041 001
14 m	814 041 031

Design and Function

Installation drawing 823 000 000 2 & 810 023 000 2

Gen3 Master Assembly

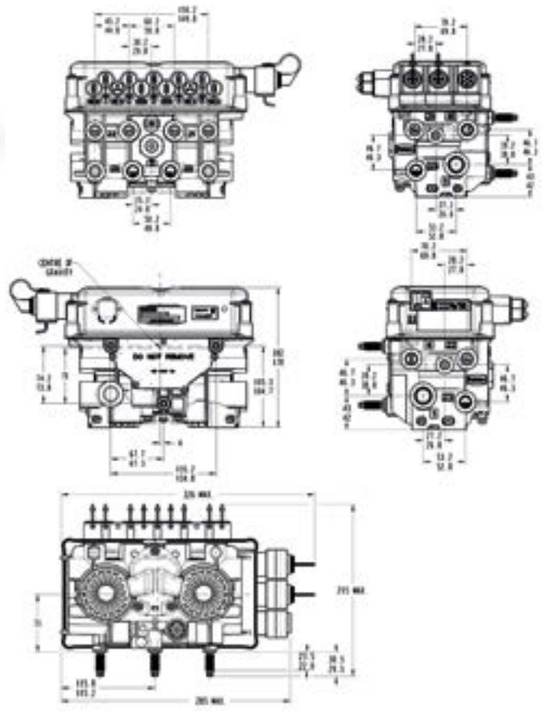

Gen3 Slave Assembly

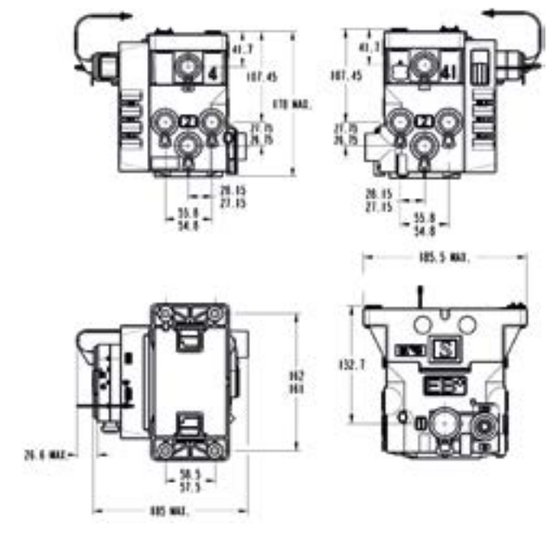

EB+ GEN3 - 3M TECHNICAL INFORMATION

EB+ GEN3

2M WITH TEM
BRAKING SCHEMATIC

More information

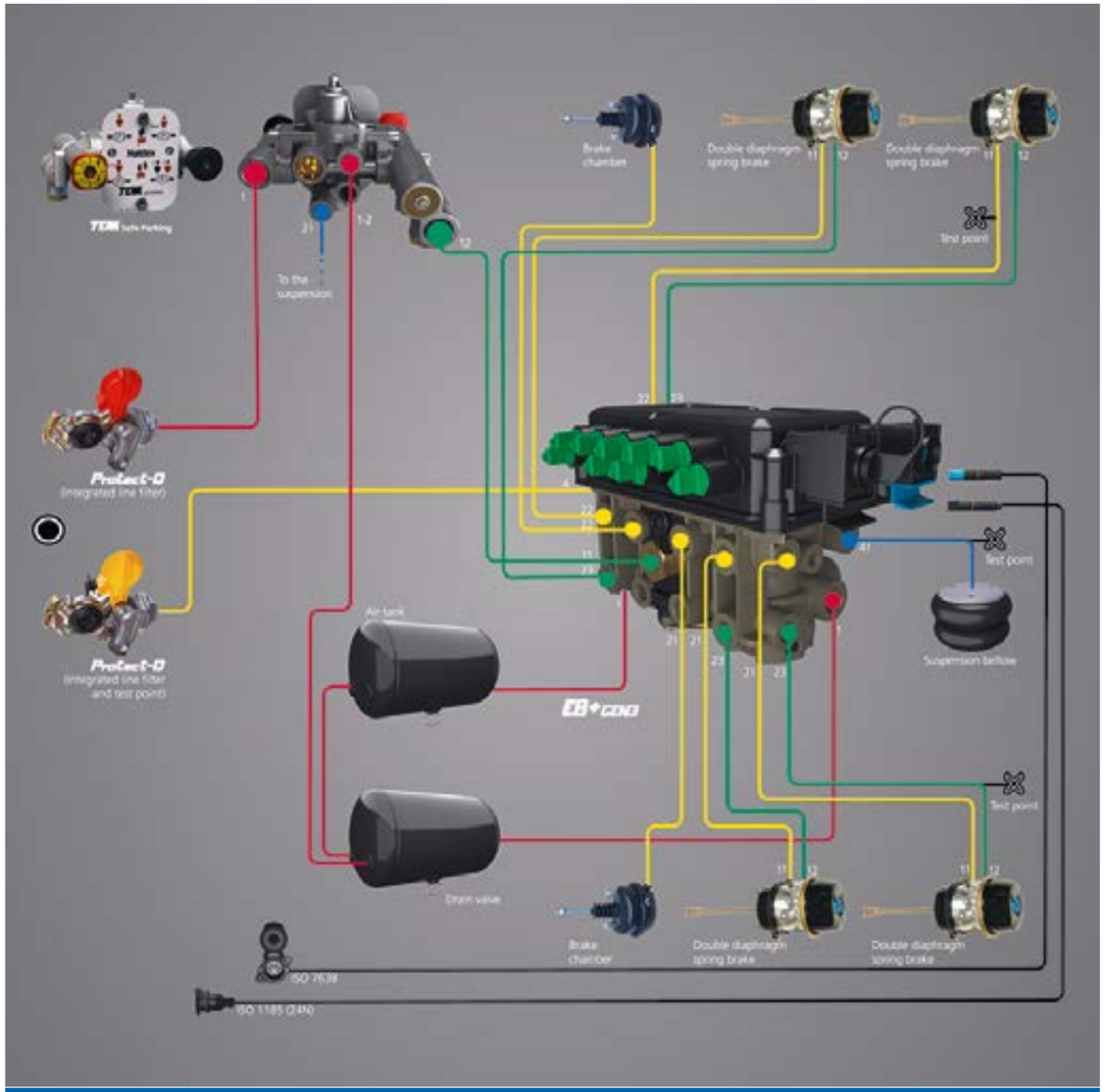

Légend

- Emergency
- Service Brake
- Parking brake
- Air suspension
- Power supply

The EB+ Gen3 is a perfect fit for us: It's the picture of userfriendliness and has very good diagnostic tools. And Haldex offers excellent technical support.

Robert Hewett,
Stagetruck

EB+GEN3 2M TECHNICAL INFORMATION

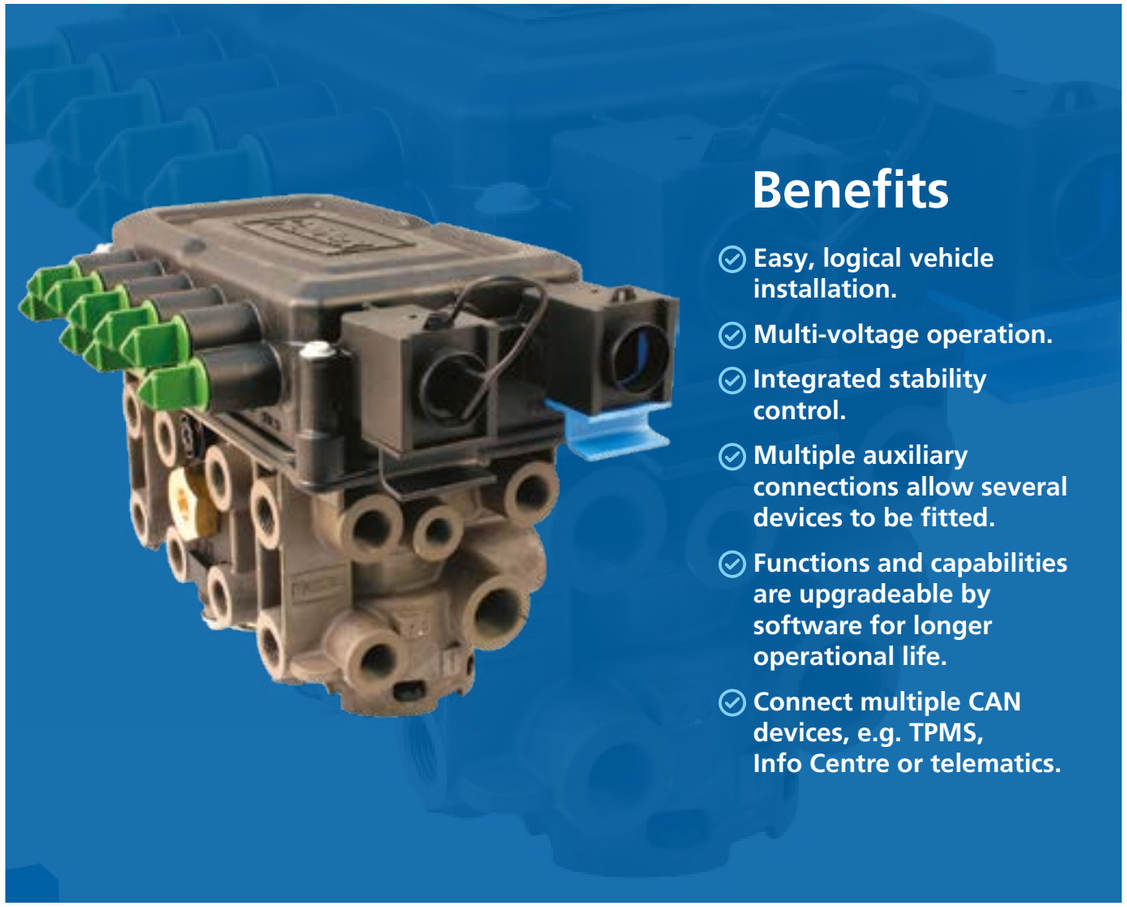

Benefits

- Easy, logical vehicle installation.
- Multi-voltage operation.
- Integrated stability control.
- Multiple auxiliary connections allow several devices to be fitted.
- Functions and capabilities are upgradeable by software for longer operational life.
- Connect multiple CAN devices, e.g. TPMS, Info Centre or telematics.

EB+ Gen3 2M

EB+GEN3 2M is a 12/24V EBS with integrated roll-over control, intended for fitment to semi and centre axle trailers using full air braking systems with air/mechanical suspension.

Independent EBS for semi and centre axle trailers. EB+GEN3 2M, 2 modulators, 4 sensors, multiple auxiliary connections, integrated stability, maximum flexibility.

EB+GEN3 2M



Specifications

- Integrated quick release valve
- Integrated anti-compound valve
- Service brake test points
- Dual Reservoir connections
- ECU operates 8-32V
- Plastic enclosure
- External connections via up to 13 moulded plugs
- EMC/RFI approved
- Valve integrated with electronic load sensing and roll-over control
- Delivery and suspension M16 ports
- Reservoir M22 ports

Part Numbers

Gen3 2M	823 008 xxx
Gen3 2M AM	8950823IC

Design and Function

Installation drawing 823 000 000 2

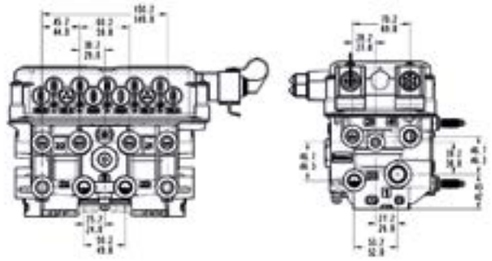

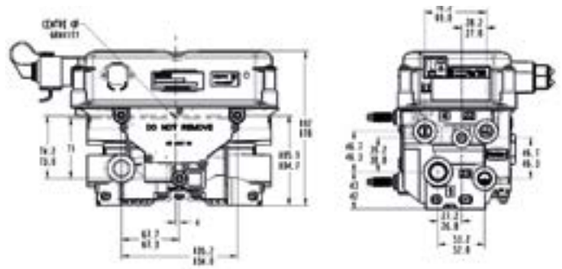

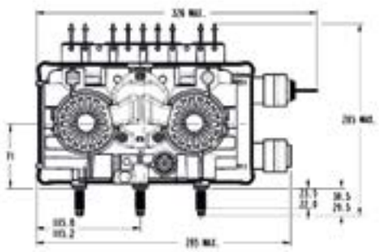

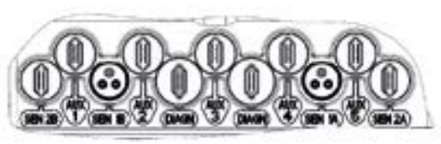

EB+ GEN3 - 2M TECHNICAL INFORMATION

EB+GEN1 TO GEN3 CONVERSION KIT



Electronic Braking System

The Haldex EB+ Gen1 ECU is no longer available and must now be replaced by an EB+ Gen3.
Follow the step-by-step guide outlined below. This will help ensure that all parts are suitable for the application prior to the service centre or workshop carrying out the work. All EB+ Gen1 modulator valves are unaffected and continue to be available separately.

STEP 1

- Replace EB+ Gen1 with EB+ Gen3 part number 950823008



STEP 2

- Select appropriate bracket kit required for mounting EB+ Gen3 unit.
  There are two choices:
  a side mounted bracket
  or top mounted bracket



Side mounted bracket kit Part no. 852993006E

Top mounted bracket kit Part no. 852993006H

STEP 3

- Select the correct size pipe fitting kit based on the spring brake pipe diameter currently on the trailer



Pipe fitting kit 8 mm Part no. SB8 MM

Pipe fitting kit 10 mm Part no. SB10 MM

Pipe fitting kit 12 mm Part no. SB12 MM

EB+ GEN1 TO GEN3 CONVERSION

EB+GEN3
QRV REPAIR KIT
QUICK SERVICE GUIDE



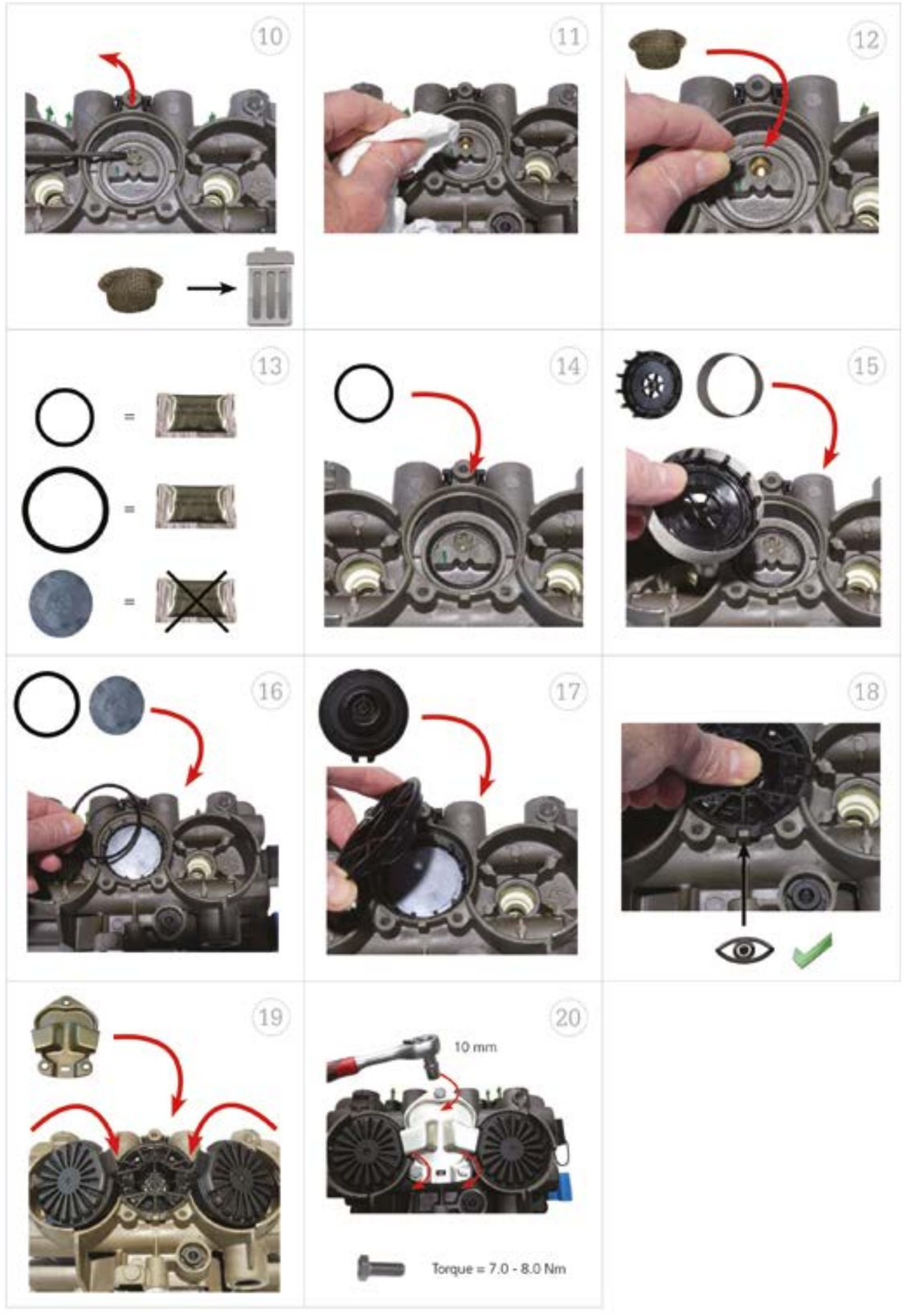

EB+ GEN3 - QRV REPAIR KIT

EB+ CAN HUB TECHNICAL INFORMATION



Benefits

- Easy, logical vehicle installation
- Auto configuration installation
- Uses available EBS cables

A compact standalone unit used to extend the ISO 11992 CAN Bus.

The EB+ CAN Hub is an ISO 11992 repeater / router for 12 / 24V EB+ EBS. It has three EB+ Power A (ISO 7638) connectors, sharing power and lamp connections but with each having a separate ISO 11992 node. There is also one input to connect an external pressure sensor for a commercial vehicle not equipped with ISO 11992 (i.e. Truck with ABS system only).

EB+ CAN Hub



Software

- **The EB+ CAN Hub will only work with EB+ Gen3 that has E741 software level and onwards installed.**
- **The EB+ CAN Hub is configured using DIAG+ V6.20 onwards software. The DIAG+ software can be downloaded from the Trailer Application Guide section of the Haldex website. The DIAG+ Operators Guide (006 300 019) can be downloaded from the Findex section of the Haldex website.**

Part Numbers

EB+ CAN Hub	815 057 001
Pressure switch	815 022 001
Cables:	
ISO 7638 Socket	814 003 1xx
ISO 7638 Plug	814 004 1xx
Pwr A to Pwr A	814 042 0xx
Pressure switch	814 001 5xx

Refer to the EB+ CAN Hub installation guide 006 300 049 for a full list of part numbers. This guide can be downloaded from the Findex section of the Haldex website www.haldex.com

Design and Function

Installation: refer to customer drawing 815 057 000 2

Repeater mode

The EB+ CAN Hub in repeater mode is used to extend the ISO 11992 CAN Bus which is limited to 40 meters, where 22 meters is allocated for the truck (towing vehicle + Suzie connection) and a maximum of 18 meters for the trailer (towed vehicle).

EB+ CAN Hub usage on an overlength trailer example:

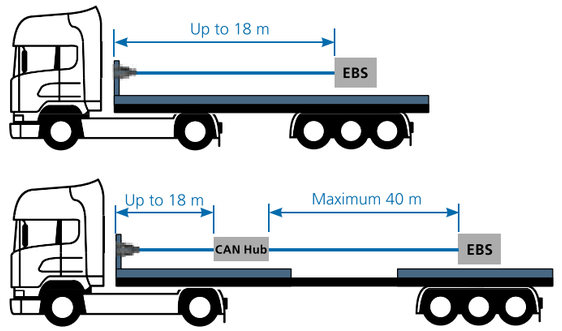

Router mode

The EB+ CAN Hub in router mode controls the transmission of the signals between the EB+ EBS of the preceding and succeeding vehicles within the road train.

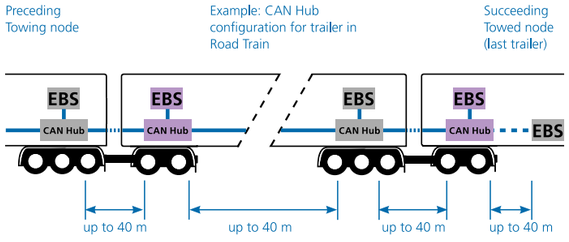

Key:

EBS	EBS fitted on a trailer
CAN Hub	CAN Hub fitted on a trailer
EBS	EBS fitted on a Dolly / Centre axle trailer
CAN Hub	CAN Hub fitted on a Dolly / Centre axle trailer

EB+ CAN HUB

TEM/TRCM

Safe Parking 40

TEM: Safe Parking braking schematic 42

TEM+: 2M with TEM+ braking schematic 44

TrCM-TrCM+: Safe Parking braking schematic 46

Our drivers have praised the systems because they make their work easier and help prevent emergency situations

Adam Godawski,
Omega Pilzno

SAFE PARKING



No more risk

Safe Parking stands for increased safety and prevents potentially fatal mistakes by man and damage to material during trailer coupling and uncoupling.

SAFE PARKING

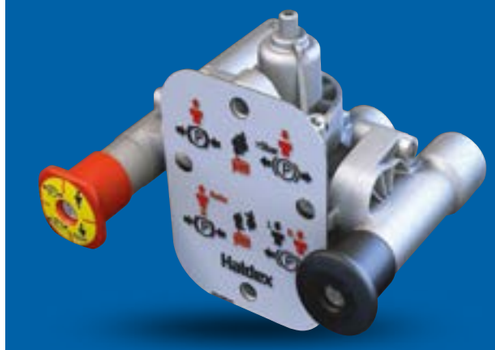

Less is more

There are two Safe Parking variants available: the well-known Trailer Control Module+ (TrCM+) and the TEM (Trailer Emergency Module) which is a technically simplifi ed version of the TrCM+. TEM is also available in a single knob version with 'Deadman' feature.

TEM is not intended as a replacement for TrCM+, but as a streamlined, low-cost alternative. Those who value emergency braking with the service brake instead of the parking brake can retain this preference with TrCM+.

Haldex is the only manufacturer to offer both these solutions.



The Safe Parking feature is recommended by professional health and insurance organizations to prevent accidents and damage claims.



Just two mistakes in succession can create serious danger

Error one is failure to activate the parking brake after uncoupling. Error two is connection of air lines in the wrong sequence.

Suddenly, the trailer is a source of risk. If the driver has not yet mechanically connected the tractor unit and the trailer, and if the two are parked on a slope, the trailer can crush the man on the deck against the rear wall of the cab. The other possibility is equally bad – if the trailer rolls backwards, it can threaten bystanders or traffic.

One of the most common causes of accidents in the transport industry

"We know well enough the causes of accidents", explains Christian Bertholier of the transport and logistics company GEODIS BM, based in Chambry, France. With a total of about 6,000 vehicles, the fleet manager knows accidents due to inappropriate coupling of air hoses or failure to set the parking brake don't happen by chance: "Safe Parking will be the standard at GEODIS BM". Isabelle Vigier, fleet manager at temperature-controlled specialist TFE, which operates some 3,700 vehicles, totally agrees. TFE semi-trailers are in operation up to 23 hours a day and may switch tractors up to 20 times a day. This means that 20 times a day, something that shouldn't go wrong could go wrong.

TEM® SAFE PARKING BRAKING SCHEMATIC

More information

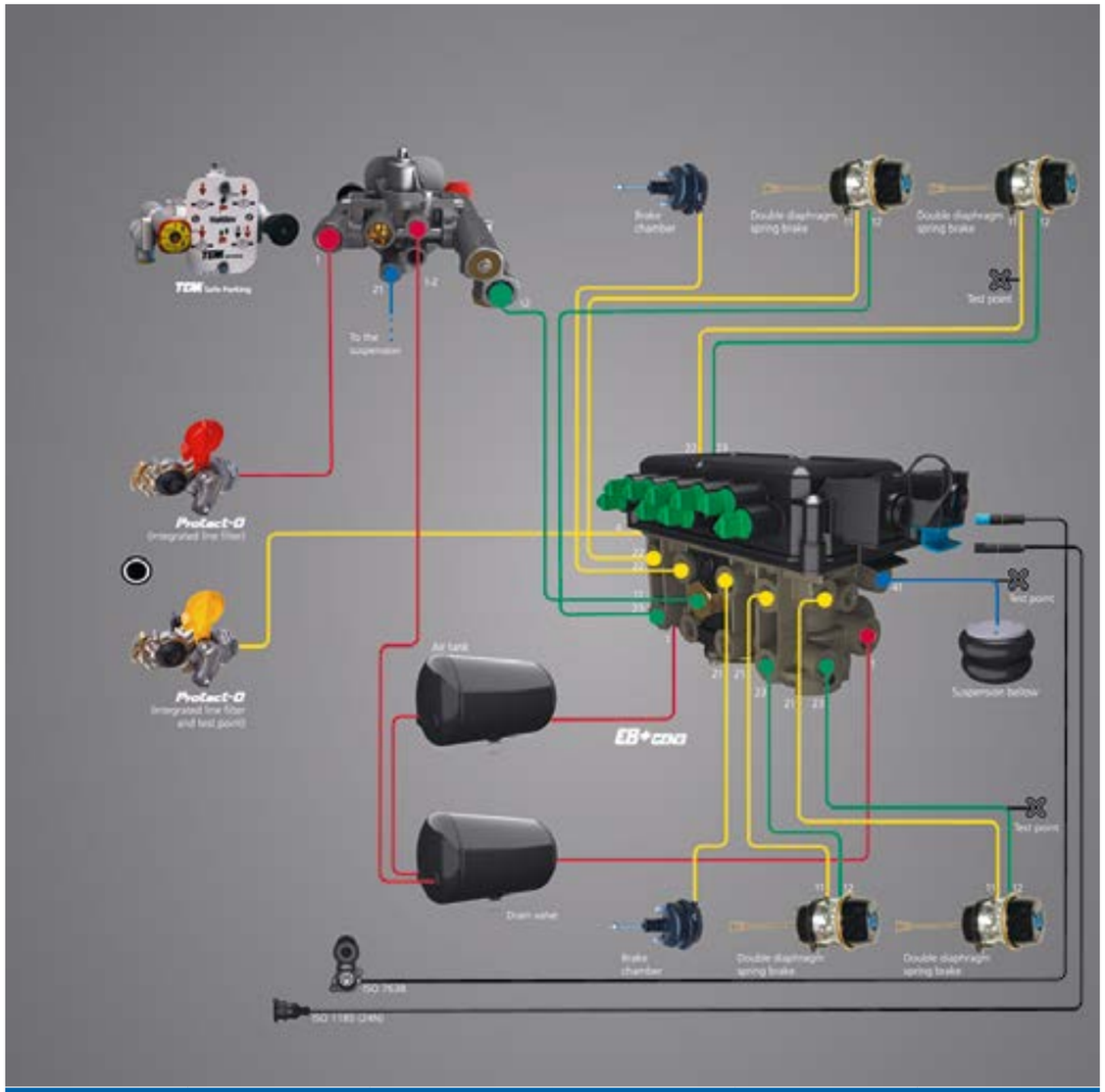

Légend

- Emergency
- Service Brake
- Parking brake
- Air suspension
- Power supply

TEM Safe Parking	Shunt valve (black knob)	Park valve (red knob)	Trailer coupled	Service and park brake	Operation conditions	Notes
	pulled	pulled	yes		parking	
	pulled	manually pushed	yes		drive position	
	pulled	automatic pulled out	no		emergency brake	
	pushed	pulled	no		parking	
	pushed	pushed	no		shunting	

TEM Safe Parking Single	Shunt valve (black knob)	Park valve (red knob)	Trailer coupled	Service and park brake	Operation conditions	Notes
	pulled	pulled	yes		parking	
	pushed	manually pushed	yes		drive position	
	automatic pulled out	automatic pulled out	no		emergency braking	
	keep manually pushed	pulled	no		shunting	

TEM®

Safe Parking Single

Pressure protection valve DIN 74279-C 6-22 - Opening pressure 6.2 bar - Closing pressure 5.2 bar

Part no.	Label	Fittings	Pressure protec. valve	Shunt valve	AM part no.
352075001	with	without	with	with	-
352075101	with	with	with	with	352075001
352075201	with	without	with	with	352067001
352075011	with	without	without	with	352075011

TEM®

Safe Parking

Pressure protection valve DIN 74279-C 6-22 - Opening pressure 6.2 bar - Closing pressure 5.2 bar

Part no.	Label	Fittings	Pressure protec. valve	Shunt valve	AM part no.
352075031	with	without	with	without	352075031
352075051	with	without	without	without	352075031



TEM SAFE PARKING WALLCHART

TEM+®

2M WITH TEM+
BRAKING SCHEMATIC

More information

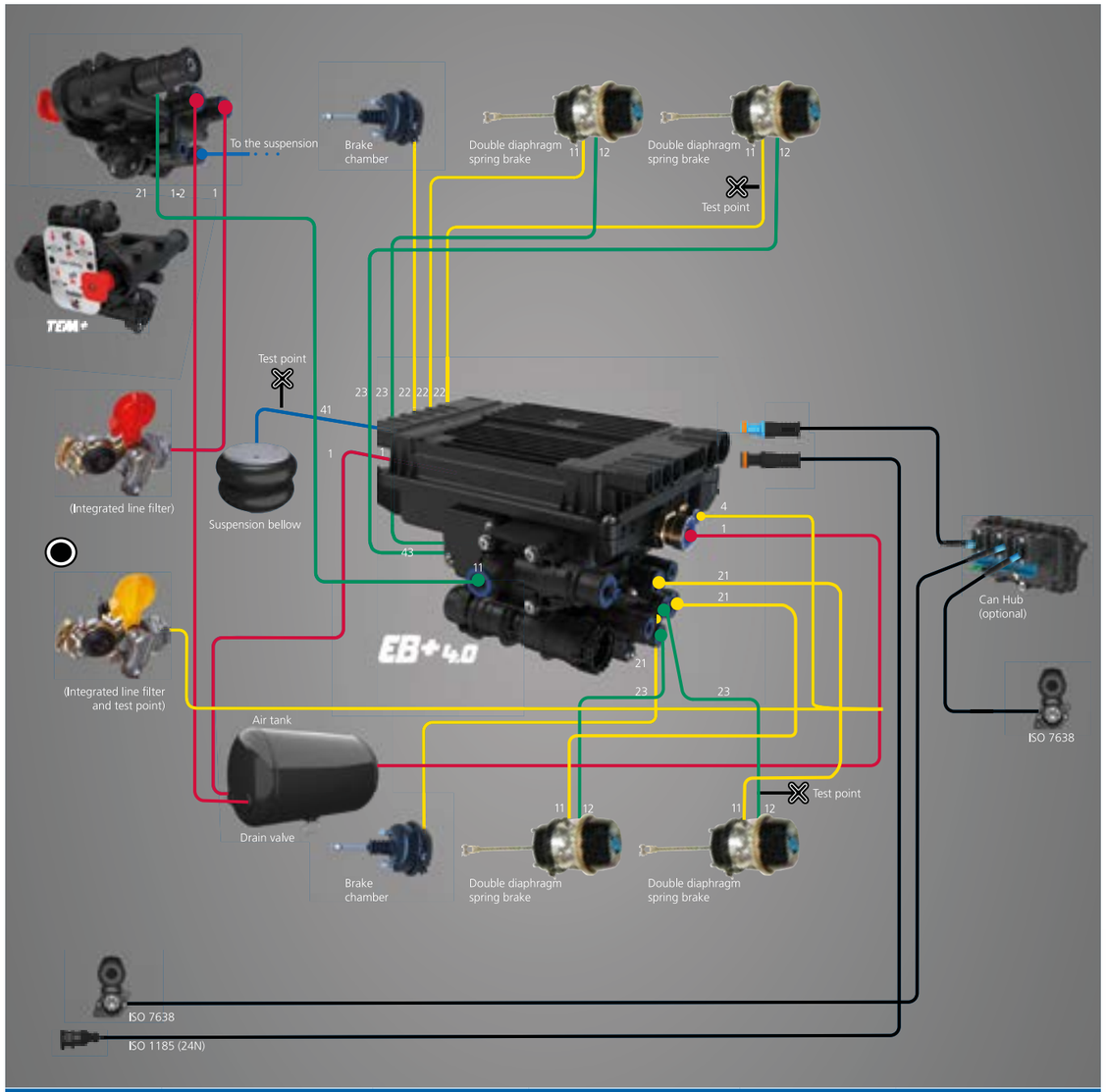

Légend

- Emergency & Air Supply
- Service Brake
- Parking brake
- Air suspension
- Power supply

Versions

Part number	Shunt valve	Pressure Protection Valve	Safe Parking	Full Trailer Valve	Aluminium label	Warning sticker
352 076 001	With	Without	Without	No	Without	Without
352 076 002	With	Without	Without	No	H131108	Without
352 077 001	With	Without	With	No	Without	Without
352 077 002	With	Without	With	No	H131110	028 0477 19
352 078 001	With	With	Without	No	Without	Without
352 078 002	With	With	Without	No	H131108	Without
352 079 001	With	With	With	No	Without	Without
352 079 002	With	With	With	No	H131110	028 0477 19
352 083 001	With	With	With	Yes	Without	Without
352 083 002	With	With	With	Yes	H131113	028 0477 19

When using versions without Aluminium label and warning sticker, the vehicle manufacturer himself must ensure that the contents of the Aluminium labels and the warning sticker are made clear to the user by means of suitable stickers or labels.



TrCM - TrCM+ SAFE PARKING

BRAKING SCHEMATIC

More information

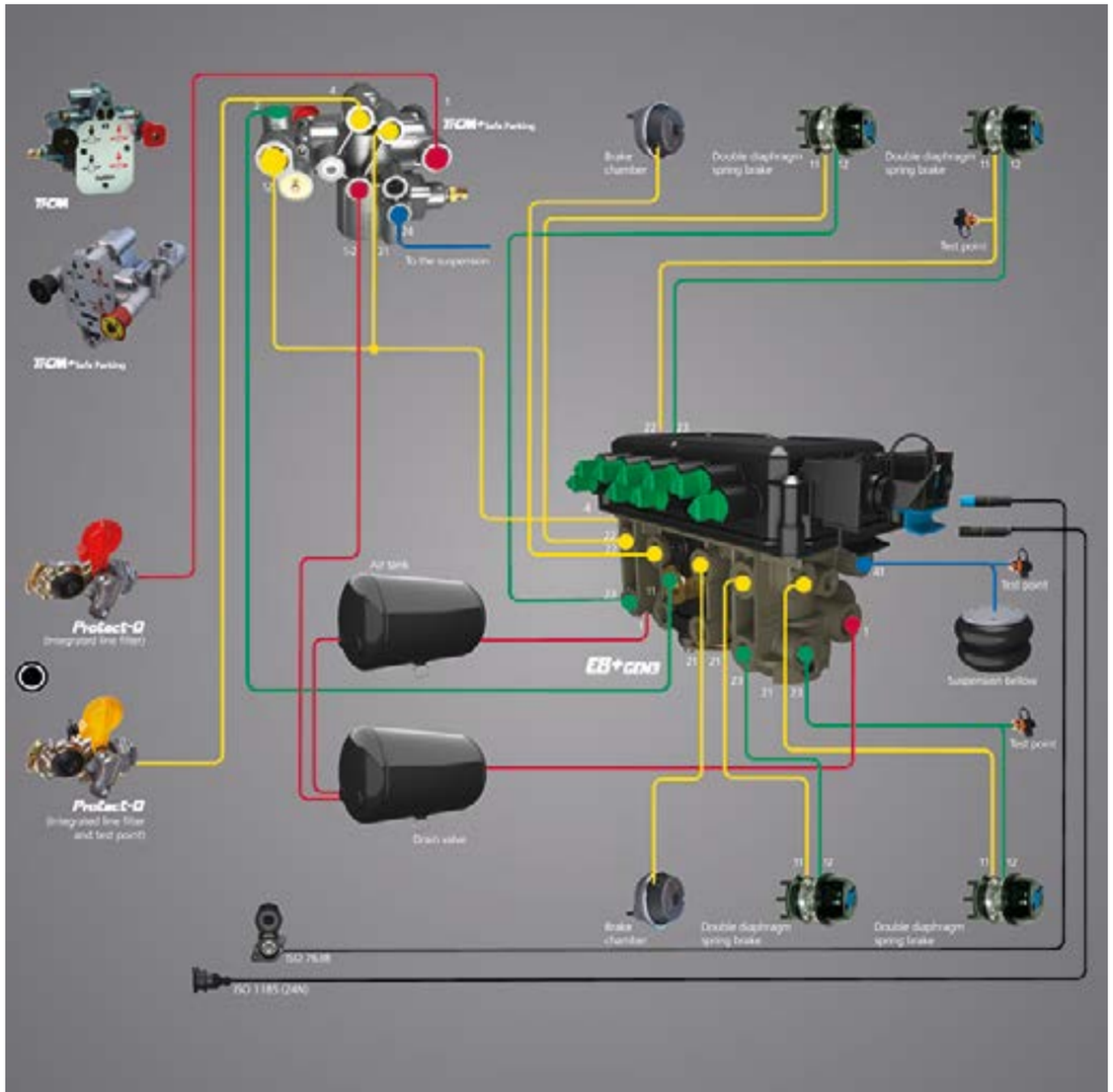

Légend

- Emergency
- Service Brake
- Parking brake
- Air suspension
- Power supply

TrCM	Shunt valve (black knob)	Park valve (red knob)	Trailer coupled	Service and park brake	Operation conditions
	pulled	pulled	yes		parking
	pulled	pushed	yes		drive position
	pulled	pushed	no		emergency brake
	pushed	pushed	no		shunting
	pushed	pulled	no		parking
	pulled	pulled	no		Anti-compounding function via EBS DCV.

TrCM+	Shunt valve (black knob)	Park valve (red knob)	Trailer coupled	Service and park brake	Operation conditions	Notes
	pulled	pulled	yes		parking	
	pulled	manually pushed	yes		drive position	
AUTO	pulled	automatic pulled out	no		emergency brake / parking brake/released via DCV	
	pushed	pushed	no		shunting	
	pushed	pulled	no		parking	

TrCM

With back flow valve

In conformity with ECE R13 Annex 8 - 2.8b*
Pressure protection valve DIN 74279-C 6-22 -
Opening pressure 6.2 bar - Closing pressure 5.2 bar

Part no.	Label	Fittings	Pressure protec. valve	AM part no.	Notes
352067001	with	without	with	-	
352067011	without	without	with	352067001	
352067021	with	without	without	352067001	with plug on 23,24,25
352067031	without	without	without	352067001	with plug on 23,24,25
352067041	with	with	with	352067001	
352067051	without	with	with	352067001	
352067061	without	with	with	352067001	
352067071	without	with	with	352067001	
352067081	with	with	with	352067001	

Without back flow valve

In conformity with ECE R13 Annex 8 - 2.8b*
Pressure protection valve DIN 74279-C 6-22 -
Opening pressure 6.2 bar - Closing pressure 5.2 bar

Part no.	Label	Fittings	Pressure protec. valve	AM part no.	Notes
352067001	with	without	with	-	
352067011	without	without	with	352067001	
352067021	with	without	without	352067001	with plug on 23,24,25
352067031	without	without	without	352067001	with plug on 23,24,25
352067041	with	with	with	352067001	
352067051	without	with	with	352067001	
352067061	without	with	with	352067001	
352067071	without	with	with	352067001	
352067081	with	with	with	352067001	

With back flow valve

Not conform with ECE R13 Annex 8 - 2.8b* since 2011
Pressure protection valve DIN 74279-C 6-22 -
Opening pressure 6.2 bar - Closing pressure 5.2 bar

Part no.	Label	Fittings	Pressure protec. valve	AM part no.	Notes
352067201	with	without	with	352067201	
352067241	with	with	with	352067201	

***ECE R13 Annex 8 §2.8b**
A reduction in the pressure within the service braking system energy reserve results in a corresponding reduction of the pressure in the spring compression chamber

TrCM+ Safe Parking

Pressure protection valve DIN 74279-C 6-22 -
Opening pressure 6.2 bar - Closing pressure 5.2 bar

Part no.	Label	Fittings	Pressure protec. valve	AM part no.	Notes
352067601	with	without	with	-	
352067611	with	without	with	352067601	
352067621	with	without	without	352067601	with plug on 23,24,25
352067641	with	with	with	352067601	

TRCM - TRCM+ SAFE PARKING

ACTUATORS

Life Seal+: Durability is king 50

Notes 52

Haldex's overall package fits perfectly with our products, which need to run economically, reliably and safely.

Gregor Wilhelmi,
Leiter Technisches Büro Werk Wittenberg

LifeSeal+ DURABILITY IS KING



Benefits

- 1-way check valve
- Integrated caging tool
- No plug
- Longer lifetime
- Higher corrosion protection

LifeSeal+ the truly sealed double-diaphragm spring brake

LifeSeal+ model is engineered smart, built strong, and road-tested tough for dependable, durable performance that outlasts ordinary spring brakes. That means fewer parts to buy, less downtime, more days on the job, lower operating costs and durability that never punches out. Put new LifeSeal+ to work for you.

LifeSeal+



Technical data disc brake

- Available in 16/24 and 20/24 for disc brake application
- 1-way check valve
- Integrated caging tool for ro-bustness,minimized envelope and easier maintenance
- Higher corrosion protection
- Available in standard and high force

Size	Part Number	Technical report	Spring force
16/24	175 1624 xxx	BC0165	Standard
20/24	175 2024 xxx	BC0176	Standard
16/24	176 1624 xxx	BC0216	High
20/24	176 2024 xxx	BC0217	High







LifeSeal+ spring brakes from Haldex

Ice melts, rain dries, but corrosion never takes a day off. In time, water, de-icers, oils and other elements eat away at your actuators and your operating ratio. You need performance and durability in your brakes. Not rust. So Haldex developed LifeSeal+,, the truly sealed double-diaphragm spring brake, to put contaminants and corrosion out of work.

The durable choice



LifeSeal+ model is engineered smart, built strong, and road-tested tough for dependable, durable performance that outlasts ordinary spring brakes.

Higher corrosion protection of all internal parts.
That means fewer parts to buy, less downtime, more days on the job, lower operating costs and durability that never punches out. Put new LifeSeal+ to work for you.

LIFESEAL+ DURABILITY IS KING

NOTES

NOTES

DISC BRAKES

2 in 1 Haldex solution 56

ModulX & ModulT the service friendly disc brakes 58

In 2014 we opted for Haldex braking systems and safety equipment. Additionally to the purchase of new systems, both parties meet regularly to discuss wishes, improvements and new developments in order to benefit from mutual knowhow. Through this symbiosis, Haldex offers us the decisive advantage in terms of safety equipment.

Tim Janoscheck
Imperial Chemical Transport GmbH

2 IN 1
HALDEX SOLUTION



Description	Disc brake	Haldex	SAF-Holland	Gigant	Krone
Brake pad kit (4 pads) ModulT GenI	DBT 22LT	H119990* 640001002	03 057 0096 00 03 057 0096 01	/	/
Brake pad kit (4 pads) ModulT GenII	DBT 22LT	H119991* 640001002	03 057 0015 00 03 057 0015 01	/	/
Brake pad kit (4 pads) GenI & GenII	DBT 22LT	95396* 640001002	/	716030000/ 716030001 703010372	550 017 646 550 018 797

ModulT trailer disc brake pad kits

Haldex's new value disc brake pad kit now fits both GenI and GenII ModulT Haldex disc brakes. It also reduces the chances of the wrong pad retainer being installed on the brake.Available under part number 640001002, the new kit includes four brake pads and an accessory kit with springs, spring brackets and plugs.
With this new product, Haldex provides what customers really need.

* With Pad retainer

Our drivers have praised the systems because they make their work easier and help prevent emergency situations.

Adam Godawski,
Omega Pilzno

ModulX & ModulT

THE SERVICE FRIENDLY DISC BRAKES

More information

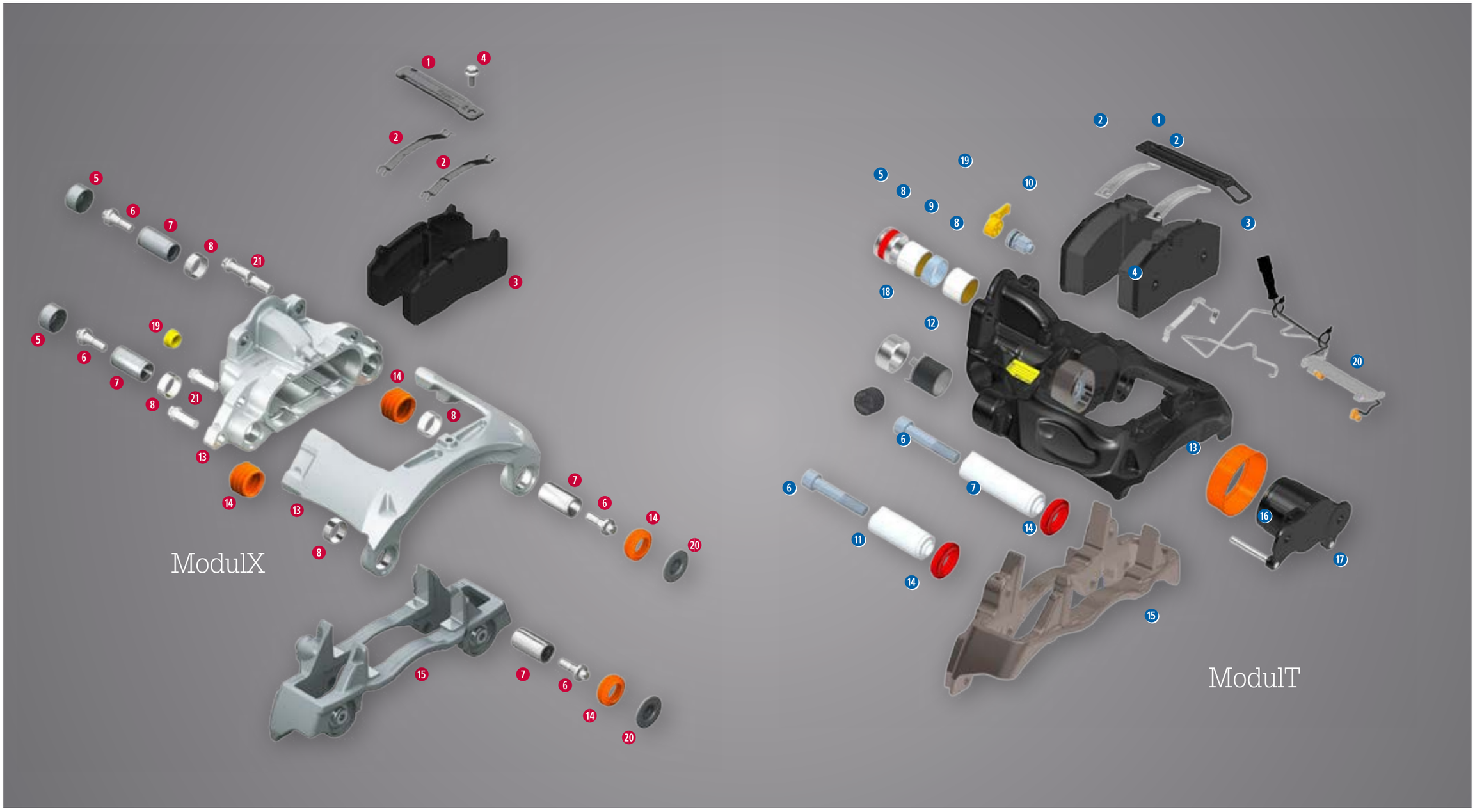

MODULX & MODULT: THE SERVICE FRIENDLY DISC BRAKES

ModuLX & ModuLT

THE SERVICE FRIENDLY DISC BRAKES

Air disc brake ModulX



Part no. AM		Application	Carrier holes	Type	Pads	Note
	92200	SAF	6	DB22	without	Kit (2 x 92503, boxed individually)
	92201	SMB	4	DB22	without	Kit (2 x 93840, boxed individually)
	92202	SMB	6	DB22	without	Kit (2 x 93839, boxed individually)
	92203	SAE	6	DB22	without	Kit (2 x 93837, boxed individually)
	94728	Gigant	6	DB22LT	without	Kit (2 x 93842, boxed individually)
92245	94605	Volvo/Renault	6	DB19	without	
92246	94605	Volvo/Renault	6	DB19	without	
92249	94605	Volvo/Renault	6	DB19	without	
92250	94605	Volvo/Renault	6	DB19	without	
92253	94605	Volvo/Renault	6	DB19	without	
92254	94605	Volvo/Renault	6	DB19	without	
92257	94605	Volvo/Renault	6	DB19	without	
92258	94605	Volvo/Renault	6	DB19	without	
92259	94605	Volvo/Renault	6	DB19	without	
92260	94605	Volvo/Renault	6	DB19	without	
	92502	SAF	6	DB22	with	Available in pair (kit 92200)
92503		SAF	6	DB22	without	Available in pair (kit 92200)
92560	92559	SAF	6	DB19	without	92559 is with pads
92612		All	6	DB22	with	2 mm pitch on carrier
92774		SAF	6	DB22	without	Available in pair (kit 92200)
92802		DANA	6	DB22	with	USA
92808		SMB	4	DB22	with	Available in pair (kit 92201)
92824		All	6	DB22LT	with	Available in pair (kit 94728)
93103	94605	Volvo/Renault	6	DB19	without	
93104	94605	Volvo/Renault	6	DB19	without	
93222	94728	Gigant	6	DB22LT	with	(Kit 94728) is a pair without pads
93694	94769	Gigant	6	DB19	without	
93695	94728	Gigant	6	DB22LT	without	(Kit 94728) is a pair without pads
93696		SMB	6	DB22	without	Available in pair (kit 92202)
93697		SMB	4	DB22	without	Available in pair (kit 92201)
93698		SAE	6	DB22	without	Available in pair (kit 92203)
	93835	SMB	6	DB22	with	Available in pair (kit 92202)
93836		SAE	6	DB22	with	Available in pair (kit 92203)
93837		SAE	6	DB22	without	Available in pair (kit 92203)
93839		SMB	6	DB22	without	Match 93835 - pads or pair (kit 92202)
93840		SMB	4	DB22	without	Available in pair (kit 92201)
93841		Gigant	6	DB22LT	with	Match (93842 + pads)
93842		Gigant	6	DB22LT	without	Available in pair (kit 94728)
93963	94769	SAE	6	DB19	with	
	94605	Volvo/Renault	6	DB19	without	
	94769	Gigant	6	DB19	without	

Pad wear indicator (PWI)

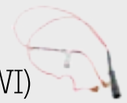

Part no.	Type	Cable (mm)	Note
420VM0121	Single PWI (compatible with all disc brakes)	650	without pad retainer
815015002	Twin PWI (compatible with all disc brakes)	600 / 670	with pad retainer with cable clamp

Pad wear sensor (PWS)



Part no.	Type	Note
94610	PWS	4 pins

Spares & repair kits ModulX

Part no.	Description	Application
89796	Brake pad (DB19); 4 pads ❶	SAE/Gigant
90693	Adjustment shaft kit (s/n 143..-->; MarkIV+ModulX) for pad clearance adjustment	
92008	Brake pad (DB22 MarkIV+ModulX); 4 pads ❸	SAF/BPW
92009	Brake pad (DB22 MarkIV+ModulX); 4 pads ❸	SMB
92010	Brake pad (DB22 MarkIV+ModulX); 4 pads ❶	SAE
92985	Application mechanism assembly (ModulX DB22LT)	
92994	Brake pad (ModulX DB22LT); 4 pads ❸	All
93299	Repair kit sliding function (s/n 5150001..-->;ModulX); with slide pins	
93887	Brake pad (ModulX DB22LT); 4 pads ❸	SMB/Gigant
94608	Brake pad (DB19); 4 pads; PWI ❶	Volvo/Renault
94659	Brake pad assembly kit (x2 calipers)	All
94660	Sliding function sealing kit (ModulX); without slide pins	
94665	Protection spring kit (MarkIV+ModulX)	
94740	Puck kit (DB19); to allow PWS use	
95566	Brake pad (DB19 ModulX+MarkIV); 4 pads ❸	SAF

Pad wear indicator (PWI)



Part no.	Type	Cable (mm)	Note
96150	PWI kit	400	Incl. pad retainer with cover and cables retainer with straps Ⓜ

Legend

Text in red — No Longer Available

Air disc brake ModulT



Part no. OEM	Part no. AM	Application	Carrier holes	Type	Pads	Description
94618	H119989C (GenI)	SAF 03 080 0082 01	-	DBT22LT	without	Disc brake complete right side; no carrier Ⓑ calliper bare and accessories
94619	H119988C (GenI)	SAF 03 080 0081 01	-	DBT22LT	without	Disc brake complete left side; no carrier Ⓑ calliper bare and accessories
96842 03 080 0098 71	95623C (GenII)	SAF 03 080 0098 51	-	DBT22LT	without	Disc brake complete right side; no carrier Ⓑ calliper bare and accessories
96841 03 080 0097 71	95622C (GenII)	SAF 03 080 0097 51	-	DBT22LT	without	Disc brake complete left side; no carrier Ⓑ calliper bare and accessories
	95621C	Krone / Gigant	-	DBT22LT	with	Disc brake right side; no carrier Ⓑ calliper bare and accessories
	95620C	Krone / Gigant	-	DBT22LT	with	Disc brake left side; no carrier Ⓑ calliper bare and accessories
96938 (GenII)	96552 (GenII)	Krone / Gigant	6	DBT22LT	without	Disc brake right side; with carrier Ⓑ calliper bare; no accessories
96937 (GenII)	96551 (GenII)	Krone / Gigant	6	DBT22LT	without	Disc brake left side; with carrier Ⓑ calliper bare; no accessories
95446 (GenI)	97432 (GenII)	ADR / SAE	6	DBT22LT	with	Disc brake complete right side
95447 (GenI)	97433 (GenII)	ADR / SAE	6	DBT22LT	with	Disc brake complete left side
95888 (GenI) H160050 (GenII)	96546 (GenI / II)	Jost	6	DBT22LT	without	Disc brake right side; with carrier Ⓑ calliper bare; no accessories
95889 (GenI) H160051 (GenII)	96545 (GenI / II)	Jost	6	DBT22LT	without	Disc brake left side; with carrier Ⓑ calliper bare; no accessories
95275 96267	96305C	SAF / Krone / Gigant / Assali Steffen	-	DBT19LT	with	Disc brake right side; no carrier Ⓑ calliper bare and accessories
95274 96268	96304C	SAF / Krone / Gigant / Assali Steffen	-	DBT19LT	with	Disc brake left side; no carrier Ⓑ calliper bare and accessories
96357	96548	Assali Steffen	4	DBT19LT	without	Disc brake right side; with carrier Ⓑ calliper bare; no accessories
96356	96547	Assali Steffen	4	DBT19LT	without	Disc brake right side; with carrier Ⓑ calliper bare; no accessories

Tools - test equipment ModulT



Part no.	Description
95231	Tool kit ModulT
95210	Pulling bracket Ⓝ
95219	Mandrel
95221	Clamp
95222	Cup
95224	Thrust plate bellows press Ⓗ Ⓟ
95225	Calliper bellows press left Ⓗ

Part no.	Description
95226	Calliper bellows press right Ⓗ
95233	Socket insex ❹
95237	Tool box ModulT
95423	Axial ball bearing
96819	Spindle
96820	Nut
97240	Reset tool, torx Ⓝ



90693
Adjustment shaft kit



93299
Repair kit sliding function



94660
Sliding function sealing kit



94665
Protection spring kit



95396
Brake pad replacement kit(ModulT)



95397
Repair kit sliding function(ModulT)



95398
Adjustment shaft ki(ModulT)



95399
Application unit sealing kit

Spares & repair kits ModulT

Part no.	Description	Application
95396	Brake pad replacement kit (ModulT)	All
	4 brake pads ❶	
	4 pad springs ❷	
	4 pad retainers (2 GenI and 2 GenII) ❶	
	2 spring brackets ❹	
	2 plugs Ⓝ	
95397	Repair kit sliding function (ModulT)	All
	2 bearings ❽	
	1 spacer ❾	
	1 leading slide pin ❼	
	2 screws (M16 x 80) ❻	
	1 leading slide protective cup ❺	
	1 trailing bushing Ⓞ	
	1 trailing slide pin Ⓛ	
	1 trailing slide protective cup Ⓚ	
	1 plug Ⓝ	
	2 bellows complete Ⓜ	
	1 spring bracket ❹	
95398	Adjustment shaft kit (ModulT)	All
	1 reset shaft complete Ⓝ	
	1 plug Ⓝ	
95399	Application unit sealing kit	
	1 plug Ⓝ	
	1 bellows Ⓜ	
	1 grease tube	
	1 spring bracket ❹	

Pad wear indicator (PWI)



Part no.	Type	Cable (mm)	Note
96150	PWI kit	400	Incl. pad retainer with cover and cables retainer with straps Ⓜ

Legend

Text in red — No Longer Available

More information

MODULX & MODULT: THE SERVICE FRIENDLY DISC BRAKES

SUSPENSION

ILAS-E+: Technical information 64

COLAS+ single: Technical information 66

COLAS+ dual: Technical information 68

If technology is important, there is only one air valve brand to consider.
Air Suspension Control Valves are used to automatically control the vehicle's ride height by inflating and deflating the air suspension bellows to adjust for variations between loaded and unloaded vehicles. They are also used for cab suspensions to provide ride comfort for the operator and for bus suspension application, including kneeling capability.

ILAS®-E+ TECHNICAL INFORMATION

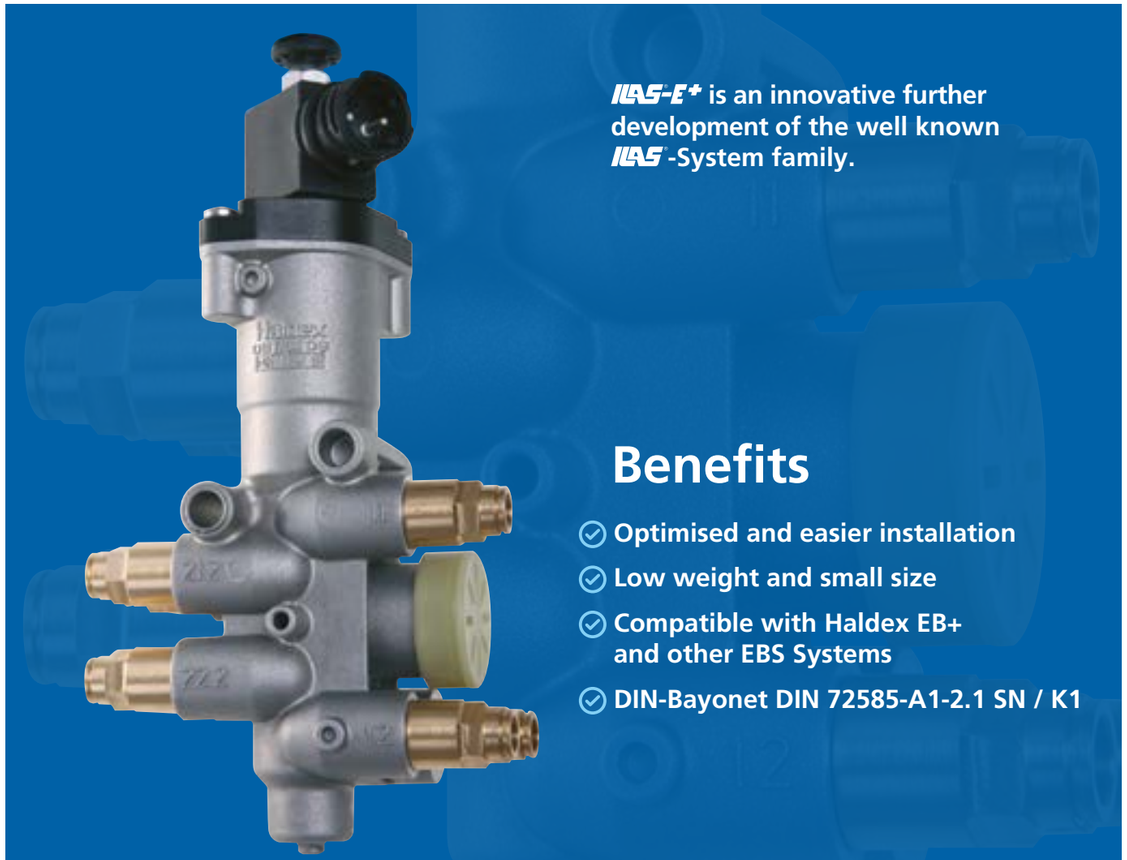

ILAS-E+ is an innovative further development of the well known **ILAS**®-System family.

Benefits

- Optimised and easier installation
- Low weight and small size
- Compatible with Haldex EB+ and other EBS Systems
- DIN-Bayonet DIN 72585-A1-2.1 SN / K1

ILAS®-E+ is used for electrically controlled lifting and lowering of one or several lift - axles with conventional air suspension systems. With electronically controlled air brake systems, e.g. EB+, **ILAS-E+** are controlled by the load depended output signal.
Traction option using a switch and speed signal (EB+).

ILAS®-E+



Use

- Semi-trailer
- Centre-axle-trailer
- Drawbar-trailer

Technical data

Operating pressure	pe = 8.5 bar
Switch pressure	4.5 bar + 0.5 bar
Operating temp.	-40°C + 80°C
Weight	ca. 0.70 kg
Solenoid data, versions I, II	
Voltage	24 V + 7.0 / -8.0
Current power	150 mA / 3.5 W
Type of protection for	DIN 40050 - IP 6K 9K
Admissible energization time 100 % ED	

Port description

Versions I, 1.1, 1.2	supply
Versions II, 1.1	supply
Port 11	air suspensed axle
Port 21.1, 21.2	lift axle
Port 22.1, 22.2	lift bellow
Port 3	exhaust
Push-In	M 12 x 1.5 for 8 x 1

Versions

- 352 080 001 Version I
- 352 080 011 Version II

Design and Function

Dimensions Version I, 352 080…

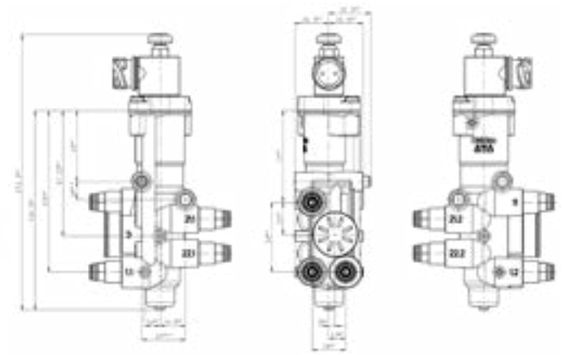

Dimensions Version II, 352 080…

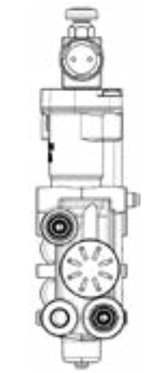

Symbol DIN ISO 1219

Version I

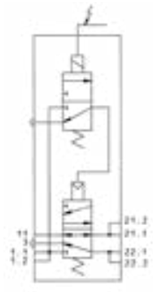

Version II

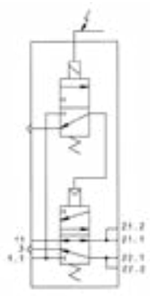

ILAS-E+ TECHNICAL INFORMATION

COLAS+ single TECHNICAL INFORMATION

The manual raise / lower valve with RoRo-function, is used for raising and lowering the deck height of trailers with air suspension.



Benefits

- Single circuit
- Dead man's function
- Push-to-connect fittings
- High air fl ow for quick response
- RoRo-function (Roll-on, Roll-off)
- RtR-function (automatic reset to ride height)
- Integration of test point (ISO 3583)
- Minimising of transport, logistics and store costs
- Application in conjunction with ABS & EB+
- Bayonet connection DIN 72585-A1-2.1 SN / K1

COLAS+ single

Haldex is offering a new COLAS+ single raise / lower valve for trailers with a single air suspension. Which has a integrated high range of functions, dead man's function, RoRo-position and its automatic reset to ride height. As further fl exibility, a high air fl ow is realised. With electronically controlled air brake systems, e.g. EB+, COLAS+ single are controlled by the load depended output signal.

COLAS+ single

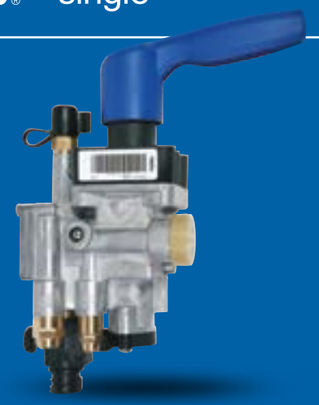

Use

- Semi-trailer
- Centre-axle-trailer

Port description

- 1 = Supply, DIN 74324-8x1
- 11 = Levelling valve
- 21 = to the air bellows
- 3 = Exhaust

Technical data

- Operating pressure pe max 8.5 bar
- Operating temperature -40°C to +80°C
- Permissible duty 10 s
- Voltage UB = 24VDC +7/-8
- Current/power Io = 150mA / Po = 3.5W
- Type of protection DIN 40050-IP 6K 9K

Versions

- 338 071 101: with dead man's function, with RtR, 8x1 mm push-in, c/w test point, with RoRo at lowering locked
- 338 071 131: with dead man's function, with RtR, 10x1,25 mm push-in, c/w test point, with RoRo at lowering locked

Design and Function

Dimensions 338 06. ...

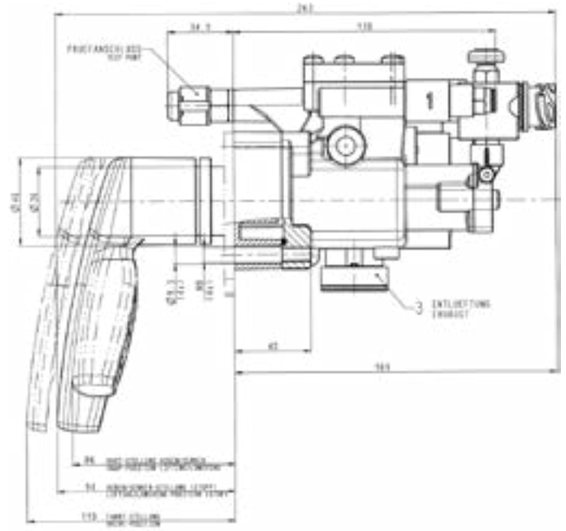

Schematic pneumatics 338 06. ...

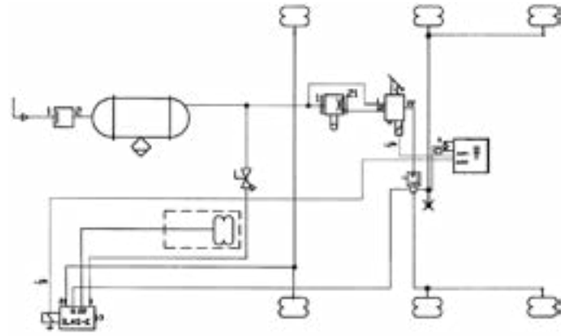

COLAS+ SINGLE TECHNICAL INFORMATION

COLAS+ dual TECHNICAL INFORMATION

The manual raise / lower valve with RoRo-function, is used for raising and lowering the deck height of trailers with air suspension.



Benefits

- Double circuit
- Dead man´s function
- Push-to-connect fittings
- High air flow for quick response
- RoRo-function (Roll-on, Roll-off)
- RtR-function (automatic reset to ride height)
- Optional integration of test point (ISO 3583)
- Minimising of transport, logistics, store costs
- Application in conjunction with ABS & EB+
- Bayonet connection DIN 72585-A1-2.1 SN / K1

COLAS+ dual

Haldex is offering a new COLAS+ raise / lower valve which has an unparalleled high range of functions. Not only the usual features such as dead man´s function are integrated, it also uses the RoRo-position and its automatic reset to ride height if the driver forgets to switch back to the drive position. Reset to ride height (RtR) is a function, which prevents damaging of the bodywork and wheel suspension, controlled by the EB+ System: A corresponding signal is sent by the EB+ to COLAS+, which resets the chassis to drive height. As further flexibility, a high air flow is realised.

COLAS+ dual



Port description

- 1 = Supply, DIN 74324-8x1
- 11, 12 = Levelling valve
- 21, 22 = to the air bellows
- 3 = Exhaust

Technical data

Operating pressure	pe max 8.5 bar
Operating temperature	-40°C to +80°C
Permissible duty	10 s
Voltage	UB = 24VDC +7/-8
Current/power	Io = 150mA / Po = 3.5W
Type of protection	DIN 40050-IP 6K 9K

Versions

- 338 071 101: with dead man´s function, with RtR, 8 mm push-in, c/w test point, with „RoRo“ at lowering, c/w bayonet, c/w filter
- 338 071 111: with dead man´s function, with RtR, 8 mm push-in, w/o test point, with „RoRo“ at lowering, c/w flat contact, c/w filter
- 338 071 121: w/o dead man´s function, w/o RtR, 8 mm push-in, c/w test point, with „RoRo“ at lowering, c/w filter
- 338 071 131: with dead man´s function, with RtR, 10 mm push-in, c/w test point, with „RoRo“ at lowering, c/w bayonet, c/w filter
- 338 071 141: with dead man´s function, with RtR, 10 mm push-in, w/o test point, with „RoRo“ at lowering, c/w flat contact, c/w filter
- 338 071 151: with dead man´s function, w/o RtR, 10 mm push-in, c/w test point, c/w filter

Design and Function

Dimensions 338 07. ...

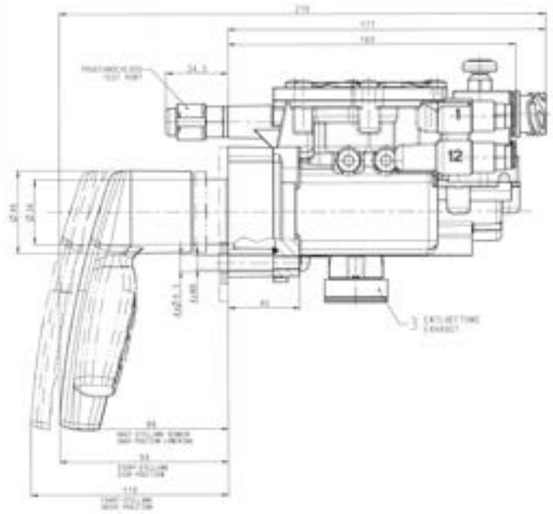

Schematic pneumatics 338 07. ...

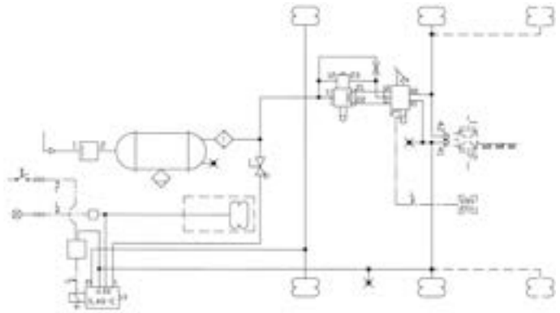

COLAS+ DUAL: TECHNICAL INFORMATION

FEATURES

EB+ Soft Docking: Many safe returns 72

TPMS 2.0: Under pressure 74

TPMS 2.0: Under pressure 76

EB+ Info Centre: Trailer diagnostic unit 78

Haldex has always been a reliable partner who really understands our requirements

Norbert Klostermann,
Gigant

EB+ SOFT DOCKING: MANY SAFE RETURNS



EB+ Soft Docking

Accidents happen all too easily when docking at a loading bay. EB+ Soft Docking helps prevent damage by automatically activating vehicle brakes as the distance between vehicle and ramp becomes critical.

EB+ Soft Docking



Safely into the loading bay

- Multiple, ultrasonic sensors mounted on the rear of the vehicle detect the distance to the loading bay
- At three metres, the driver receives visual and audio warning signals
- When the rear of the vehicle is within one metre of the ramp, the system automatically determines vehicle speed and load weight and applies vehicle brakes accordingly
- At a distance of less than 0.5 metres, intermittent beeping becomes one continuous beep and position lights shine continuously



What can go wrong will go wrong

Murphy's Law holds even for docking at a loading bay: If something can go wrong it will go wrong. Statistics show that about 35 percent of all incidents that cause damage occur when reversing a truck. About every three months, a refrigerated vehicle takes a knock that results in damage costing, on average, EUR 500-1,500.





Extended functionality

EB+ Soft Docking has more functionality and is more compact than ever. The system's design makes blind spots at the rear of the vehicle a thing of the past. The new electronic control unit is CAN-bus compatible and can communicate directly with EB+. Because temperature affects ultrasonic sensors, the second generation of Soft Docking records outdoor temperature. This guarantees optimal functionality independent of climate and weather. In addition, **EB+ Soft Docking** and CANbus compatibility means all trailer electronics, such as the Haldex TPMS tyre pressure monitoring system, can utilise recorded temperature data. For nighttime deliveries, the system offers a mute option for the audio warning signal.



Low cost investment, easy to retrofit

EB+ Soft Docking is installed on the trailer. The system does not require connection to the tractor unit. It is a stand-alone solution that is easy to retrofit.

EB+ SOFT DOCKING

TPMS 2.0: UNDER PRESSURE



TPMS 2.0 Tire Pressure Monitoring System

The TPMS 2.0 constantly measures the air pressure and temperature in the tires of trailers. It extends tire life, reduces fuel consumption and avoids vehicle breakdown or accidents due to flat tires. Our new TPMS 2.0 is compatible with EB+ 4.0 and is compliant with R141.

TPMS 2.0



Haldex TPMS 2.0 at a glance

The Haldex TPMS 2.0 monitors both the pressure and the temperature of each individual trailer tire and is compatible with the Haldex EBS for trailers.

- **Constant measuring of tire pressure and temperature**
- **Prevented breakdowns and saved costs**
- **Extended tire lifetime**
- **Increased road safety**
- **Less fuel consumption**
- **Tire puncture detection**
- **Reduced CO_2 emission**
- **EB+ 4.0 gateway functionality is compliant with 2022 TPMS legislation**
- **Passed Type Approval testing with TÜV**

Calculate your saving on www.haldex.com/TPMS



You will be astonished how quickly the Haldex TPMS pays for itself.

Enormous potential

A tire air pressure 20% below the recommended level reduces tire life by 20%. As for tractor vehicle fuel consumption: a 20% drop in air pressure means about 2% increase in fuel consumption. Fuel represents on average between 15% to 25% of the company expenses, the savings potential is then considerable!

Haldex TPMS measures not only the pressure but also the temperature of the tires. An underinflated tire gets hotter than a properly inflated one. And there can also be situations where a tire is properly inflated but its temperature is too high (due to radiation from the brake or a roller bearing in bad condition e.g.).

Tire life Optimisation

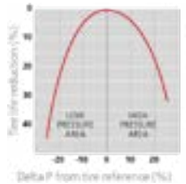

Less fuel consumption

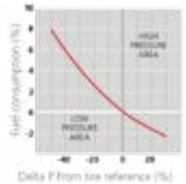

Less CO_2 emission

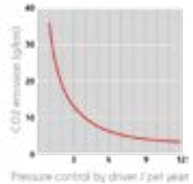

Flexible attachment of the sensors

Haldex's 'flexible' attachment system provides a degree of freedom to the sensor if it gets bumped by the tire bead. The other major advantage of a 'flexible' attachment is its versatility: it can be used on all types of rims and profiles.

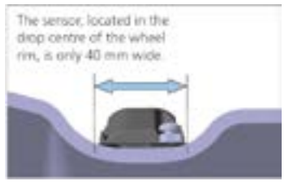

Fully compliant



Our improved TPMS keeps up the high standards of Haldex, all while being up to industry standards. The TPMS 2.0 is compatible with the R141 legislation. Haldex next generation TPMS in combination with EB+4.0 is fully compliant with the revised legislation for both OE and aftermarket.

TPMS 2.0: UNDER PRESSURE



TPMS 2.0 Tire Pressure Monitoring System

The TPMS 2.0 constantly measures the air pressure and temperature in the tires of trailers. It extends tire life, reduces fuel consumption and avoids vehicle breakdown or accidents due to flat tires. Our new TPMS 2.0 is compatible with EB+ 4.0 and is compliant with R141.

SEMI / CENTRE AXLE TRAILER

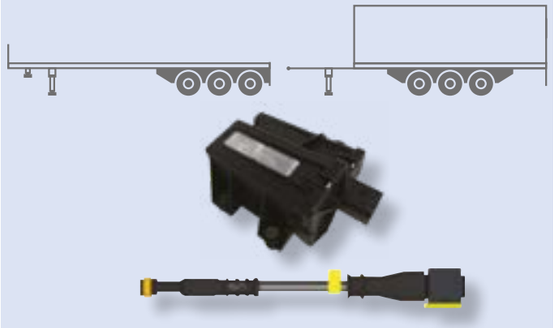

TPMS 2.0 RCU / Cables

Part number	Qty	Description
815 058 001	1	TPMS 2.0 RCU manual configuration
844 534 012	1	TPMS 2.0 Cable Terminated 1.2 m
844 536 012	1	TPMS 2.0 Cable Unterminated 1.2 m (alternative)

WHEEL UNIT SENSOR KITS

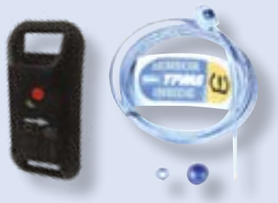

TPMS 2.0 wheel unit sensor kit

910 815 024

Part number	Qty	Description
042 7272 19	1	Wheel Unit Sensor (WUS)
003 9517 09	1	Cable clamp assembly
006 700 021_M	1	WUS Sticker



TPMS 2.0 wheel unit sensor kit

910 815 024

Part number	Qty	Description
042 7272 19	1	Wheel Unit Sensor (WUS)
H144896	1	Belt Assembly for rim sizes 17.5" to 24.5"
006 700 021_M	1	WUS Sticker



H152934	-	WUS Sole for smaller diameter rims (optional)

FULL TRAILER

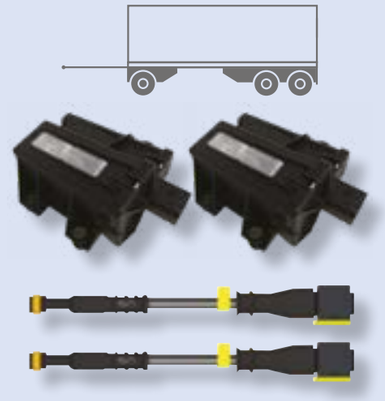

TPMS 2.0 RCU / Cables

Part number	Qty	Description
815 058 001	2	TPMS 2.0 RCU manual configuration
844 534 012	1	TPMS 2.0 Cable terminated 1.2 m
844 536 060	1	TPMS 2.0 second RCU Cable 6 m
844 537 100	1	TPMS 2.0 second RCU Cable 10 m (alternative)

CONFIGURATION / ANALYSING TOOLS



Info Centre

Part number	Qty	Description
815 041 001	-	EB+ Info Centre
815 046 001	-	EB+ Info Centre ADR



VT Truck

Part number	Qty	Description
815 065 001	-	TPMS Trigger Tool Multibrand

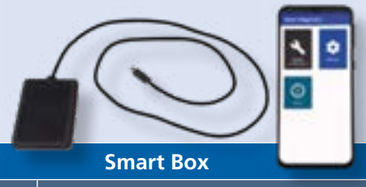

Smart Box

Part number	Qty	Description
815 063 001	-	TPMS 2.0 Smart Box for Phone APP

TPMS 2.0

EB+ INFO CENTRE: TRAILER DIAGNOSTIC UNIT



EB+ Info Centre

All-knowing. EB+ Info Centre can display load information in kilograms and in bar graph form. It can also show total percent bogie weight and read any diagnostic trouble code from the EBS ECU.

EB+ Info Centre



Benefits

- information as available in the EB+ Electronic Control Unit
- Connected permanently

With the internal battery, the Info Centre 2 is not ADR approved but an ADR variant is available to cover this category of vehicles.

Lots of information available

The Info Centre 2 is a side of trailer mounted diagnostic unit used for readout of odometer, diagnostic codes and other information as available in the EB+ Electronic Control Unit (all current features available when an EBS Gen2 is programmed and using C497 / 498 / 499 or when an EBS Gen3 is programmed and using E653 or when an U-ABS is programmed and using A650 or higher level of software).

Always connected !

The Info Centre 2 is connected permanently to the ECU's diagnostic 'DIAG' connection. While the ECU is powered from its normal source (ISO7638 permanent) information is transferred to the Info Centre's memory, which can be recalled. Power is supplied from the vehicle system via the ECU diagnostics connector.Info Centre 2 comprises an LCD (Liquid Crystal Display) and three buttons marked with up/ down arrows and an OK button.Info Centre 2 also has an internal battery which allows readout of information (including fault indication) when the trailer is uncoupled and unpowered.

EB+ INFO CENTRE

SERVICES

Trailer Application Guide 81

Trailer product overview 82

Technical support 84

Distributors & Service Centres 85

TRAILER
APPLICATION GUIDE



A complete overview and transparent trailer technology

Whether vehicle construction, workshop repair or spare part distribution, the Trailer Application Guide provides unique electronic access to all Haldex systems for trailers.

Scan the Qr code to test it

TRAILER PRODUCT OVERVIEW

Learn more



Software & Diagnostic
ABS / EBS

EBS
EB+ 4.0

EBS
EB+ Gen3

ABS
U-ABS

ABS
ABS 4.0

Cables
ABS / EBS

EBS Features
TPMS

EBS Features
EB+ Info Centre

EBS Features
EB+ Soft Docking

EBS Features
Lining Wear System

EBS Features
EB+ CAN Hub

EBS Features
Electronic Height Sensor

Schematics
Brake, Suspension & Auxiliaries



Air Brake
Coupling heads



Air Brake
Relay emergency valves



Air Brake
Load sensing valves



Air Brake
TrCM+



Air Brake
TrCM

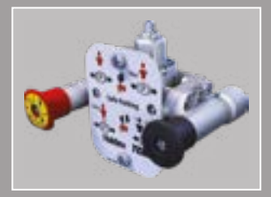

Air Brake
TEM® Safe Parking



Air Brake
TEM+



Air Suspension
Levelling valves



Air Suspension
ILAS-E lift axle valves



Air Suspension
COLAS raise / lower valves



Air Disc Brake
ModulT



Actuators
Double Diaphragm Spring Brake for disc brakes



Actuators
Brake Chambers for disc brakes



Brake Adjusters
AA1, S-ABA



Actuators
Double Diaphragm Spring Brake for drum brakes

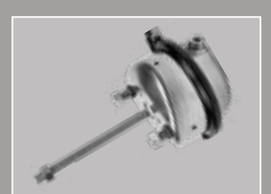

Actuators
Brake Chambers for drum brakes

TRAILER PRODUCT OVERVIEW

TECHNICAL SUPPORT



Dedicated Technical Hotlines

0891 89 95 90*
* Coût de la communication : 0,80€/min.

Service disponible :
Du lundi au vendredi
De 8h30 - 12h et de 13h30 - 17h30

+44 (0)1509 600185

Service available
Monday to Thursday 8:30 - 17:00
Friday 8:00 - 16:00

+49 6095 301 602

Erreichbar
Von Montag bis Freitag
9:00 - 12:00 und 14:00 - 17:30

+48 609 793 357

Serwis dostępny
Od poniedziałku do piątku
8:00 - 16:00

Haldex training

Haldex offers compact training courses for everything that needs to be known, from compressed air braking technology and air suspension to complex ABS and EBS systems.

DISTRIBUTORS & SERVICE CENTRES



Haldex distribution network

Close proximity to our clients is one of our primary criteria for ensuring customer satisfaction. Whether it be a specialised Haldex Select distributor, a manufacturer workshop, or central purchasing, the Haldex Service network is always close by.

The goal: to reduce waiting time and increase productivity.

Find all the local service on our website.

Scan and find all Haldex partners

AT YOUR SERVICE

Social media 87
Notes 88
Notes 90
Contact 92

SOCIAL MEDIA



Follow us on YouTube



Follow us on our YouTube channel
for product related informationand releases!

Follow us on LinkedIn



Follow us on LinkedIn to get all the relevant
news and informationregarding Haldex

NOTES

NOTES

NOTES

NOTES

CONTACT

Haldex develops and provides reliable and innovative solutions focused on brake and air suspension products to the global commercial vehicle industry. Over 130 years of innovation have provided Haldex with competitive expertise in brake and air suspension systems for commercial vehicles. Haldex is a long-term partner to manufacturers of heavy trucks, trailers and buses, as well as to axle manufacturers.

©2024, Haldex AB. This material may contain Haldex trademarks and third party trademarks, trade names, corporate logos, graphics and emblems which are the property of their respective companies. The contents of this document may not be copied, distributed, adapted or displayed for commercial purposes or otherwise without prior written consent from Haldex.

Australia
Haldex Brake Products Pty Lt
Victoria
Tel.: +61 3 9579 7070
+61 418 170 879

Belgium
Haldex N.V.
E-Mail: info.be@haldex.com

Brazil
Haldex do Brasil Ind. E Com. Ltda
São José dos Campos
Tel.: +55 12 3935 4000
E-Mail: info.brasil@haldex.com

Canada
Haldex Ltd
Cambridge, Ontario
Tel.: +1 519 621 6722
Fax: +1 519 621 3924

China
Haldex Vehicle Products Co. Ltd.
Suzhou
Tel.: +86 512 8885 5301
Fax: +86 512 8765 6066
E-Mail: info.cn@haldex.com

France
Haldex Europe SAS
Weyersheim
Tel.: +33 3 88 68 22 00
Fax: +33 3 88 68 22 09
E-Mail: info.eur@haldex.com

Germany
Haldex / SAF-HOLLAND GmbH
Bessenbach
Germany
Phone +49 6095 3010
E-Mail: info.de@haldex.com

Hungary
Haldex Hungary Kft
Szentlörinckáta
Tel.: +36 29 631 400
Fax: +36 29 631 401
E-Mail: info.hu.eu@haldex.com

India
Haldex India Private limited
Nashik
Tel.: +91 253 66 99 501
Fax: +91 253 23 80 729

Italy
Haldex Italia Srl./ SAF HOLLAND
Concorezzo
Tel.: +39 039 47 17 02
Fax: +39 039 27 54 309
E-Mail: info.it@haldex.com

Korea
Haldex Korea Ltd.
Seoul
Tel.: +82 2 2636 7545
Fax: +82 2 2636 7548

Mexico
Haldex de Mexico S.A. De C.V.
Monterrey
Tel.: +52 81 8156 9500

Poland
SAF-HOLLAND Polska Sp. z o.o.
Piła
Tel.: +48 6721 665-70
E-Mail: biuro@safholland.pl

Spain
Haldex España,S.A. / SAF HOLLAND
Barcelona
Tel.: +34 93 84 07 239
E-Mail: info.es@haldex.com

Sweden
Haldex AB
Landskrona
Tel.: +46 418 47 60 00
Fax: +46 418 47 60 01
E-Mail: info.se@haldex.com

United Kingdom
Haldex Ltd c/o SAF Holland Group
Leicestershire
Tel.: +44 1509 600185 (opt2)
customerservices.uk@safholland.com

Haldex Brake Products Ltd.
MIRA Technology Park
Tel.: +44 2476 400 300
E-Mail: info.gbre@haldex.com

USA
Haldex Brake Products Corp.
Kansas City
Tel.: +1 816 891 2470
Fax: +1 816 891 9447
E-Mail: info.us@haldex.com

www.haldex.com

0067001 50_EN/02/2024/Haldex EUR