PART No. 356_022_000_2

COMPUTER PRODUCED DRAWING MUST NOT BE CHANGED MANUALLY

N 1 PORT 1 - ENERGY INLET.

N 2 PORT 2 - ENERGY SUPPLY.

N 3 PORT 3 - EXHAUST.
(EXHAUST PROTECTION ILLUSTRATED)

N 4 OPERATING PRESSURE: Pe = 10.5 bar MAX.
MEDIUM: AIR
THERMAL RANGE: -40 / +80°C

N 5 POSITION VALVE WITH EXHAUST PORT DOWNWARDS ±15°

N 6 SYMBOL TO DIN 74253.

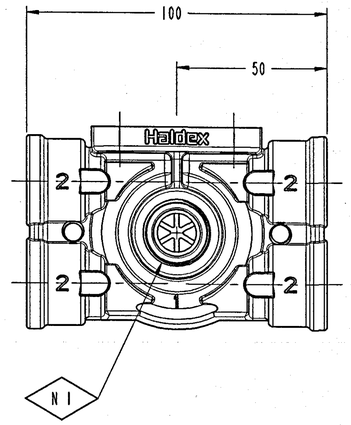

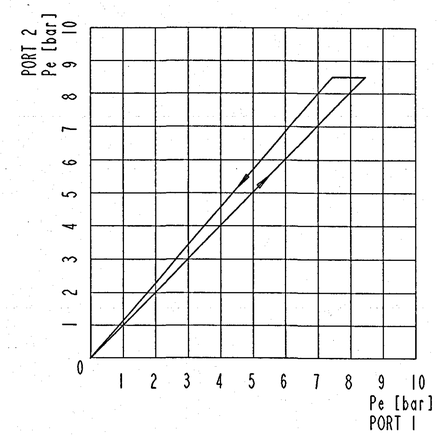

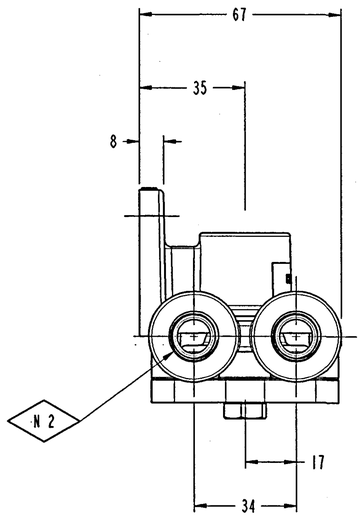

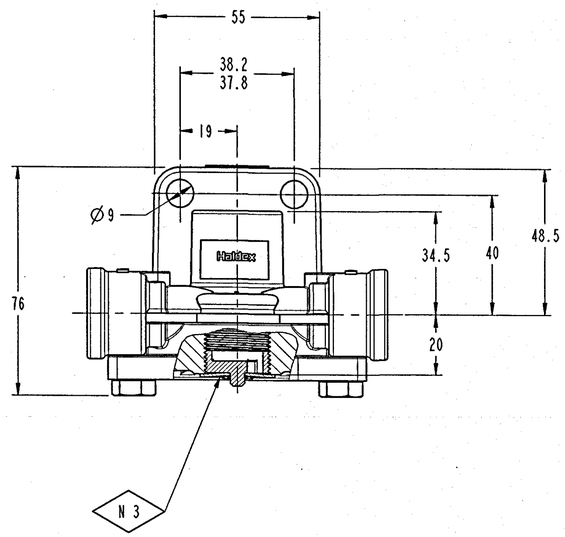

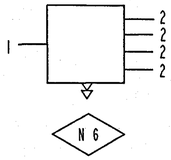

PART No.	PORT 1	PORT 2 (x4)	PORT 3
356 022 001	M22 x 1.5 14 DEEP	M16 x 1.5 14 DEEP	WITHOUT THREAD
356 022 011	M22 x 1.5 14 DEEP	M16 x 1.5 14 DEEP	M22 x1.5 14 DEEP
356 022 021	1/2"-14NPTF	1/4"-18NPTF	WITHOUT THREAD
356 022 031	M22 x 1.5 14 DEEP	M16 x1.5 14 DEEP	M22 x 1.5 WITH EXHAUST PROTECTION

N 4 N 5

THIS DRAWING/SPECIFICATION USES CLASSIFIED CHARACTERISTIC SYMBOLS DEFINED IN QUALITY PROCEDURE 4.17

ISS	CHANGE	CHEC	DATE	ISS	CHANGE	CHEC	DATE
5	C4739	CGS	05-04-05				
4	C4543	CGS	09-06-04				
3	2293 NO1	PISON1	29-04-99				
2	09745	HEIB	18-03-99				
1	09651	PISON1	05-03-98				
0	2293	PISON1	25-09-97				

PRO ENGINEER PART

THIS DRAWING/DOCUMENT IS COPYRIGHT AND THE PROPERTY OF HALDEX BRAKE PRODUCTS LIMITED. IT MUST NOT BE COPIED (IN WHOLE OR IN PART) USED FOR MANUFACTURE OR OTHERWISE DISCLOSED WITHOUT PRIOR WRITTEN CONSENT OF THE COMPANY. ANY COPIES OF THIS DRAWING/DOCUMENT MADE BY ANY METHOD MUST ALSO INCLUDE A COPY OF THIS LEGEND. © 2004

NOTE: UNLESS OTHERWISE STATED THE FOLLOWING APPLIES
1 ISO METHOD A PROJECTION.
2 S.I. UNITS.
3 SURFACE FINISH TO BS 308/BS 1134.
4 DIMS. APPLY AFTER CHEMICAL OR ELECTRO-PLATED FINISH.
5 WELD SYMBOLS TO BS 499.
6 D DATUM DIMENSIONS.
7 METRIC THREADS TO BS 3643/DIN 13.
8 UNIFIED THREADS TO BS 1580.

ASSOCIATED SPECIFICATION

MATERIAL	MODEL: DRAWN:CGSpracklen	DATE: DATE:01-06-04	TITLE 4 PORT QUICK RELEASE VALVE
HEAT TREATMENT	CHECKED R.C.Mallaby	DATE 05/04/05	
FINISH	APPROVED SPECIALIST	DATE	
FORM	APPROVED FOR ISSUE R.C.Mallaby	DATE 05/04/05	

WAS

SHEET 1 OF 1

HALDEX BRAKE PRODUCTS LTD.
MOONS MOAT DRIVE, REDDITCH, WORCS. B98 9HA

PART No. 356_022_000_2 — 5 — A1

356 022 000 2