INSTALLATION GUIDE

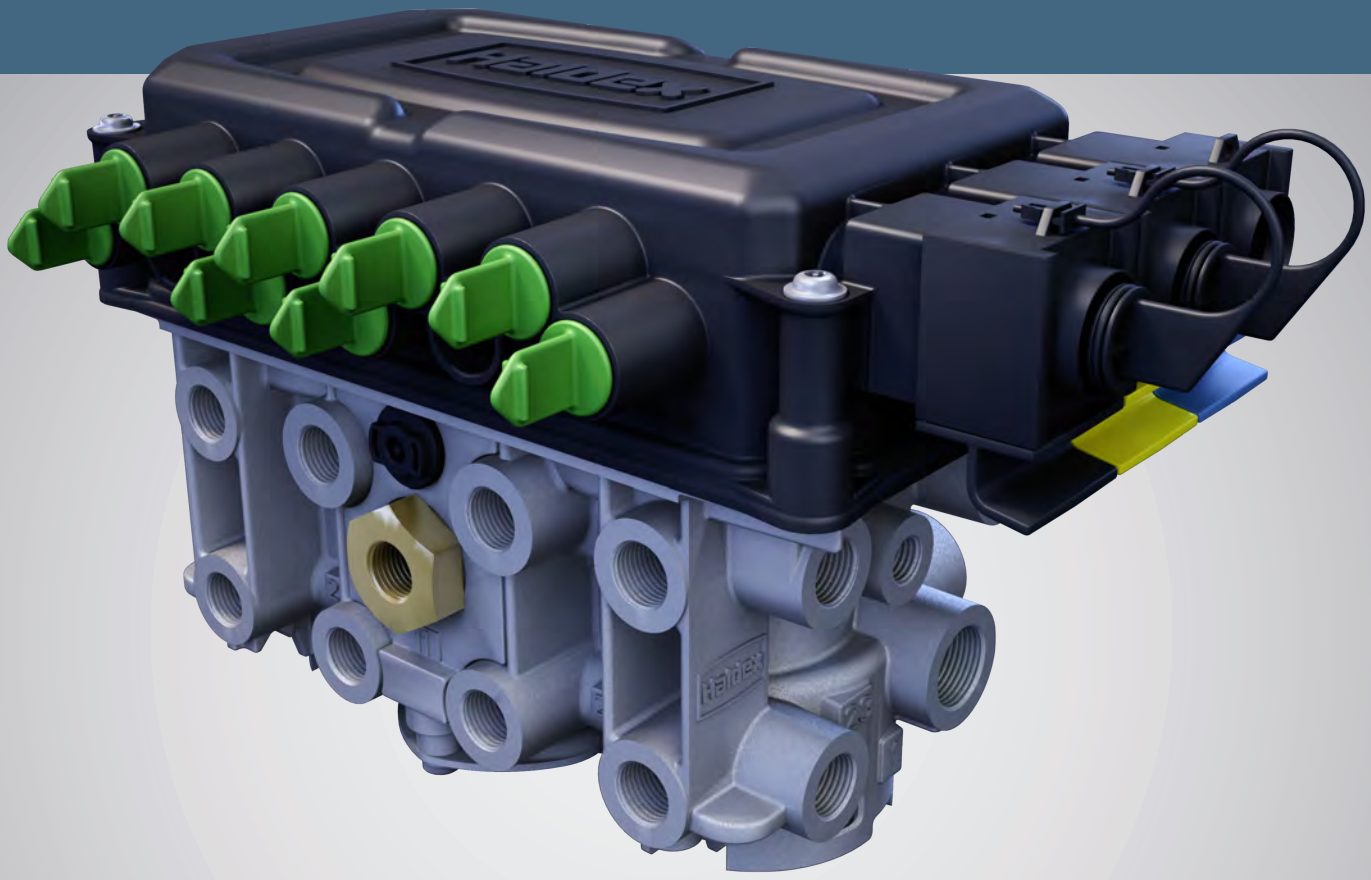

EB+GEN3 Electronic Braking System

Haldex

Innovative Vehicle Solutions

Notes on the use of this manual

This manual has been designed to assist personnel in satisfactory installation of Haldex EB+ Gen3 onto full, semi and centre axle trailers. The intention has been to illustrate various aspects of the installation. It is expected that this manual will be in possession of the appropriate person throughout their 'training' and 'experience' and that the manual will be used as:

a) A teaching aid following supervision of a Haldex engineer.

b) A reminder of the correct procedure of Haldex EB+ Gen3 installation.

- Use appropriate spare-parts documentation when obtaining spare parts
- Use only genuine Haldex parts in repairs
- Due to continuous development the right is reserved to alter the specification without notice
- No legal rights can be derived from the contents of the manual
- Duplication, translation and reprinting are prohibited without permission from Haldex Brake Products

Contents

Introduction 4
Product versions 5
General components – 2M 8
General components – 3M 10
Dimension and port identification 12
System configurations 15
Chassis installations 43
Piping recommendations 51
Piping layout – 2M brake 53
Piping layout – 2M suspension 58
Piping layout – 3M brake 63
System layout 66
ISO 7638 socket assembly 68
ECU connections – 2M 70
ECU connections – 3M 73
ECU connectors – slide lock 75
ECU connectors – Sensor / AUX / DIAG+ 83
Auxiliary operation 86
Wiring diagram – Gen3 2M 91
Wiring diagram – Gen3 3M 92
System drawing layout – COLAS$^{+}_{®}$ 93
System drawing layout – ILAS®-E front 94
System drawing layout – steer axle lock 98
Painting 100
ADR installations 101
Programming 103
System diagnostics 104
Maintenance schedule 117
Sensor installation 119
General information 121
Part reference 125
EB+ Gen3 part number variants 135

Introduction

System overview

The EB+ Gen3 system provides electro-pneumatic control of the trailer brakes for full, semi and centre-axle trailers with built in electronic load sensing and anti-lock functions. It provides the necessary components to enable compatibility with either an electronically and pneumatically signalled or a pneumatically only signalled towing vehicle.

In addition to normal service brake control, EB+ Gen3 also contains a roll stability system. This uses a lateral accelerometer, in addition to the existing sensed variables, to determine if the vehicle is close to its roll threshold. Low-level brake test pulses are also used as part of the detection process and automatically commanded braking is used to slow the vehicle below the roll threshold. The accelerometer may be external or internal to the ECU.

As well as providing the means for brake control the controller also contains auxiliary channels capable of providing ancillary functions, such as reset-to-ride height and a power / diagnostic link for use by other systems.

The main system package consists of an electronic control unit (ECU) / modulator assembly, containing a brake apply solenoid, twin solenoid operated relay valve(s) and pressure sensors for monitoring the pneumatic control line, brake delivery, reservoir and air suspension pressure.

Externally the system comprises two or four wheel speed sensors and optionally a pressure sensor sensing the pneumatic control transmission. When used the pressure sensor should be situated before an emergency valve (REV or EV) if fitted.

Trailers fitted with the system may only be towed behind vehicles fitted with an ISO 7638 connector (either 7 or 5-pin). When connected with a 7-pin connector the system receives brake demand data via the CAN data line in accordance with ISO 11992. When connected with a 5-pin connector the system determines brake demand by sensing the pneumatic control transmission.

Optionally an ISO 1185 (24N) or ISO 12098 (15 pole) stop light power back-up connection can be fitted.
This provides anti-lock braking control and optionally dynamic load sensing in situations where the ISO 7638 connection is not functioning and is not intended as a normal operating mode.

The apportionment of braking under varying vehicle load conditions is implemented in software. The load sensing parameters, from the brake calculation, are programmed into the ECU using the system diagnostic link.

Product versions

There are two versions of EB+ Gen3, a Standard version offering 4-2S / 2M with Super AUX, a Premium version offering up to 4S / 3M with Super AUX and additional auxiliary input / output capability.

Feature	Standard	Premium
Wheel speed sensors	2 or 4	2 or 4
Modulators	2	2 or 3
Auxiliary inputs*	2 analogue, 3 digital	2 analogue, 5 digital
Auxiliary outputs*	3 outputs, 1 tacho	5 outputs, 1 tacho
Super AUX*	Yes	Yes
Roll-over control	Yes	Yes
Auxiliary power extension	No	Yes
Haldex CAN bus	Yes	Yes
Power supply	8 - 32 V	8 - 32 V
Stop-lamp backup power	Yes	Yes

* Refer to the ‘auxiliary operations’ section for the function of the EB+ Gen3 auxiliaries.

EB+ Gen3 Standard [2M]

Independent EBS for semi and centre axle trailers. EB+ Gen3 2M, 2 modulators, 4 sensors, multiple auxiliary connections, integrated stability, maximum flexibility.

Benefits:

- Easy, logical vehicle installation
- Multi-voltage operation
- Integrated stability control
- Multiple auxiliary connections allow several devices to be fitted
- Functions and capabilities are upgradeable by software for longer operational life
- Connect multiple CAN devices, e.g. TPMS, Info Centre or telematics

Specifications:

- Integrated quick release valve
- Integrated anti-compound valve
- Service brake test ports
- ECU operates 8 - 32V
- EMC / RFI approved
- Reservoir M22 ports
- Valve integrated with electronic load sensing and roll-over control
- Delivery and suspension M16 ports
- External connections via up to 13 moulded plugs
- Plastic enclosure
- Dual reservoir connections

Part numbers:
Gen3 Standard: 823 008 xxx

EB+ Gen3 Standard is a 12 / 24 V EBS with integrated roll-over control, intended for fitment to semi and centre axle trailers using full air braking systems with air / mechanical suspension.

EB+ Gen3 Premium [2M or 3M]

Independent EBS for full, semi and centre axle trailers. An EB+ Gen3 3M system is possible, consisting of a Gen3 2M Master and a 1M Slave (3 modulators in total), 4 sensors, more auxiliary connections than standard, integrated stability, maximum flexibility.

Benefits:

- Easy, logical vehicle installation
- Multi-voltage operation
- Flexibility, with up to 5 input / output channels, 2 dedicated analogue channels and 3 dedicated digital inputs
- Load sensing for both Master and Slave to optimise brake efficiency and wear
- Connect multiple CAN devices, e.g. TPMS, Info Centre or telematics.

Specifications:

- Integrated quick release valve
- Integrated anti-compound valve
- Service brake test ports
- ECU operates 8-32V
- EMC / RFI approved
- Reservoir M22 ports
- Valve integrated with electronic load sensing and roll-over control
- Delivery and suspension M16 ports
- External connections via up to 14 moulded plugs
- Reservoir connections: 2 x Master, 1 x Slave

Part numbers:

Gen3 Master assembly	823 034 xxx
Gen3 Slave assembly	810 023 001

EB+ Gen3 Premium is a 12 / 24V EBS with integrated roll-over control, intended for fitment to full, semi and centre axle trailers using full air braking systems with air / mechanical suspension. A top of the range configuration delivers EBS braking with integrated ABS, electronic load-sensing, multiple CAN, 3 modulator configuration, a range of other inputs / outputs to control other functions and now with stop lamp power backup.

General components – 2M

ISO 7638 7-pin
socket assembly

Sensor and exciter
(fitted as required)

EB+ Gen3 2M
assembly

ISO 12098 /
ISO 1185 (24N)
connector

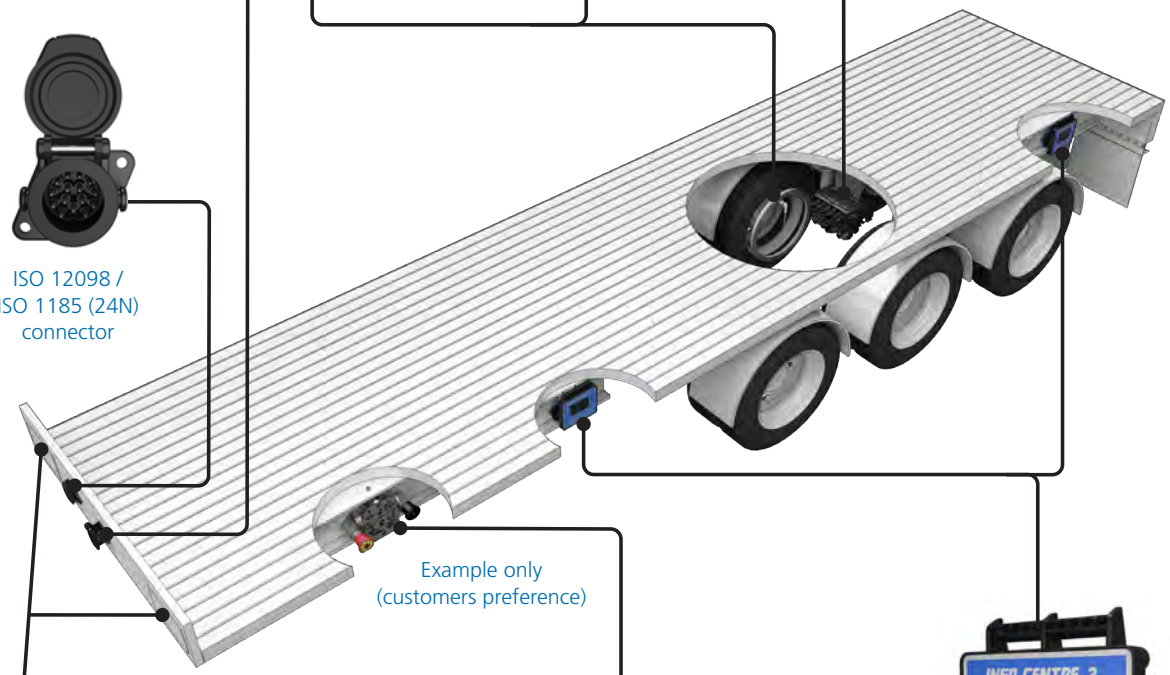

Example only
(customers preference)

Driver's information plate
(customers preference)

Info Centre 2
(customers preference)

(artists impression of layout)

Options

Option 1

TrCM+

Option 2

TEM®

Option 3

Relay Emergency Valve (REV)

Park and shunt valve

2M chassis components

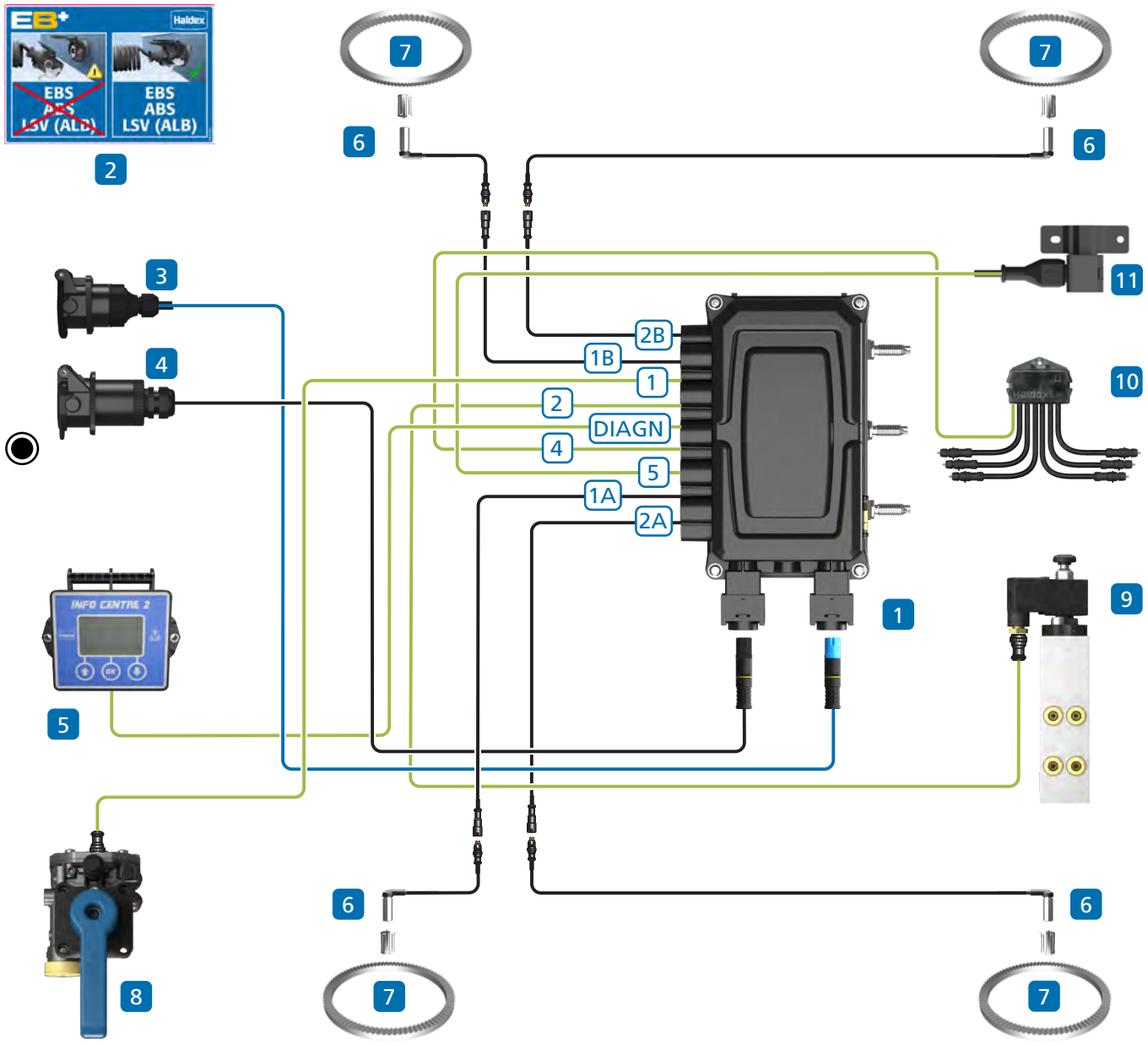

Item	Description	Notes
1	EB+ Gen3 assembly	Standard version shown
2	EB+ label	
3	ISO 7638 7-pin socket assembly	
4	ISO 12098 / ISO 1185 (24N)	Optional safety back up cable
5	Info Centre 2	
6	Sensor assembly	
7	Exciter	
8	COLAS$^{+}_{®}$	Programmable via DIAG+
9	ILAS®-E	Programmable via DIAG+
10	Lining Wear System (LWS)	Programmable via DIAG+
11	EB+ external stability sensor	Programmable via DIAG+

General components – 3M

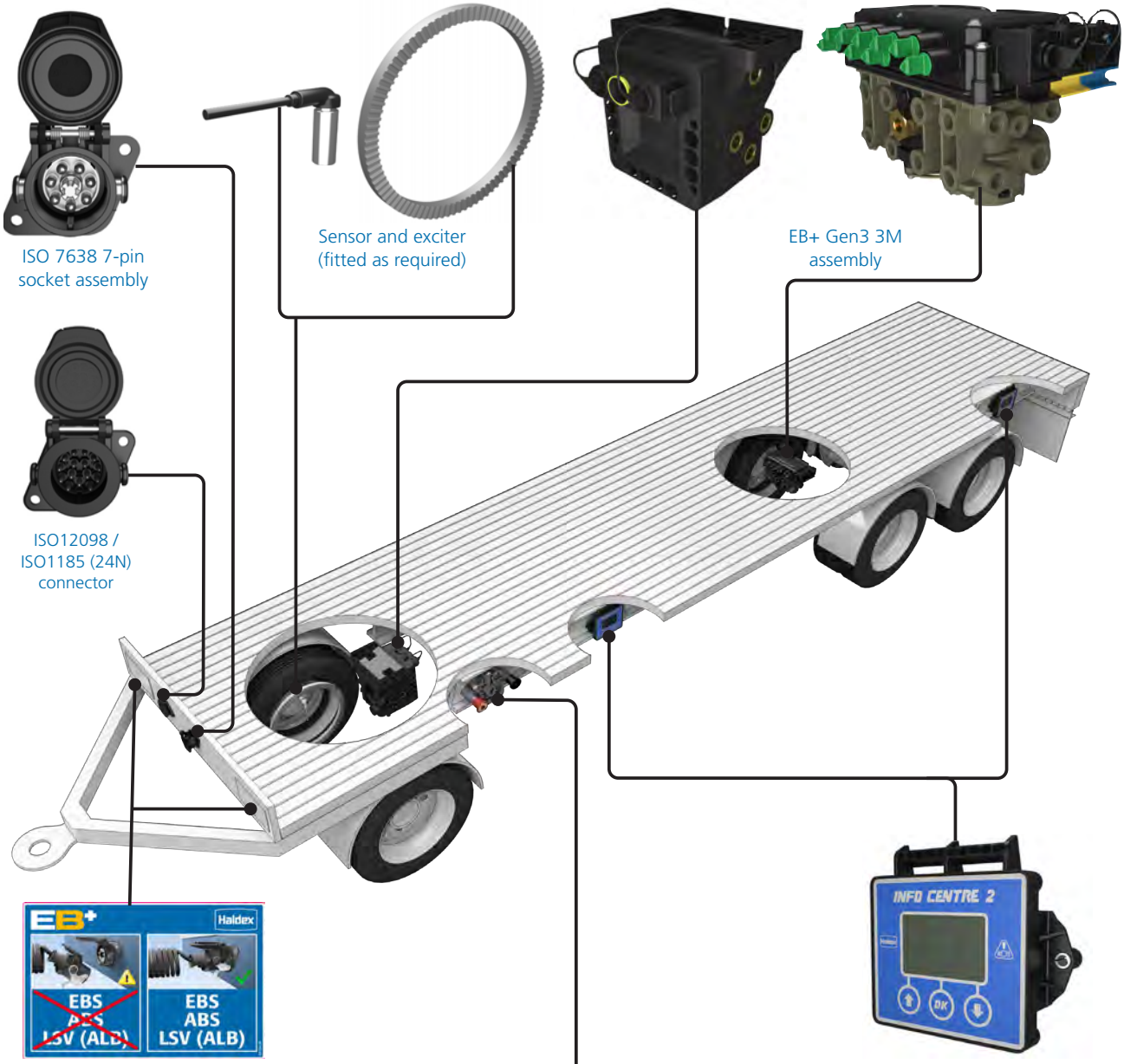

Driver's information plate (customers preference)

Info Centre 2 (customers preference)

(artists impression of layout)

Options

Option 1

TrCM+

Option 2

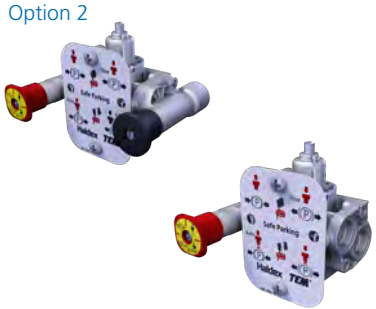

TEM®

Option 3

Relay Emergency Valve (REV)

Park and shunt valve

3M chassis components

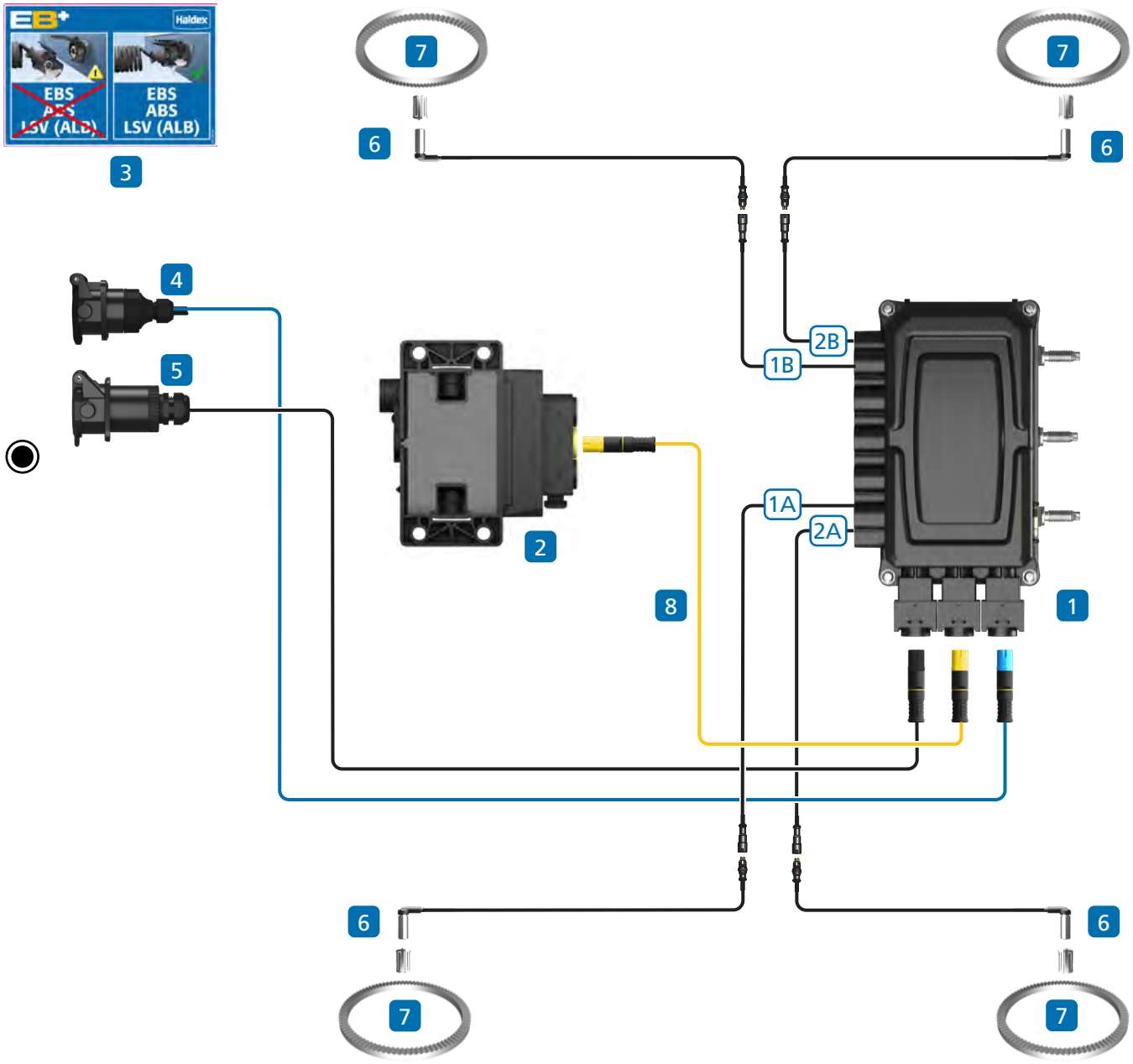

Note:
Auxiliary options as per semi-trailers

Item	Description	Notes
1	EB+ Gen3 assembly	Premium version shown
2	Slave assembly	
3	EB+ label	
4	ISO 7638 7-pin socket assembly	
5	ISO 12098 / ISO 1185 (24N)	Optional safety back up cable
6	Sensor assembly	
7	Exciter	
8	3M link cable	

Dimension and port identification

Standard assembly

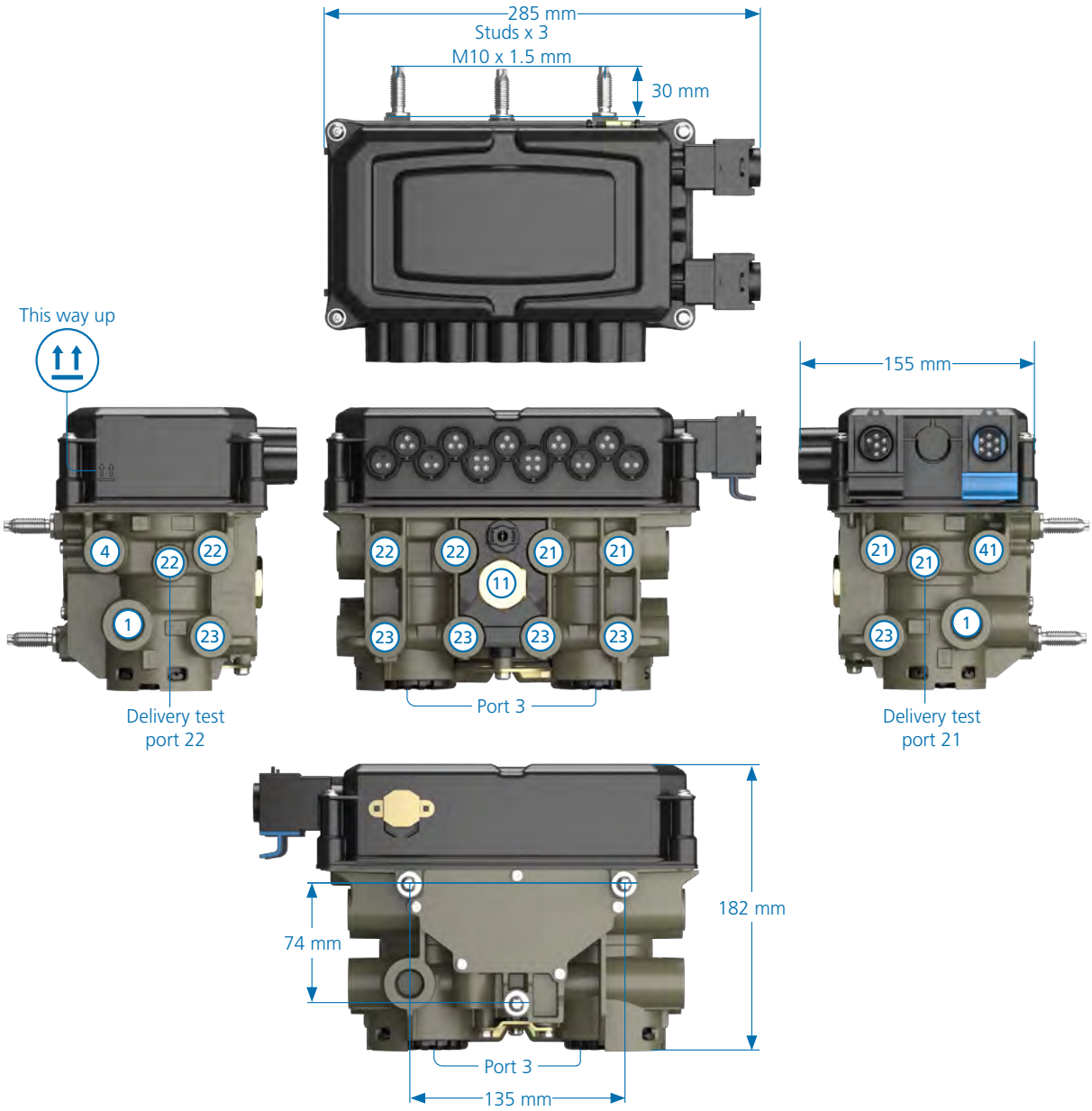

Approximate mass of assembly: 5.75 Kg

Port	Description	Notes
1	Reservoir port	M22 x 1.5 mm
3	Exhaust port	
4	Control port	M16 x 1.5 mm
11	Anti - compounding port	M16 x 1.5 mm
21/22	Delivery ports	M16 x 1.5 mm
21/22	Test point port	M12 x 1.5 mm
23	Spring brake port	M16 x 1.5 mm
41	Air suspension port	M16 x 1.5 mm

Premium assembly

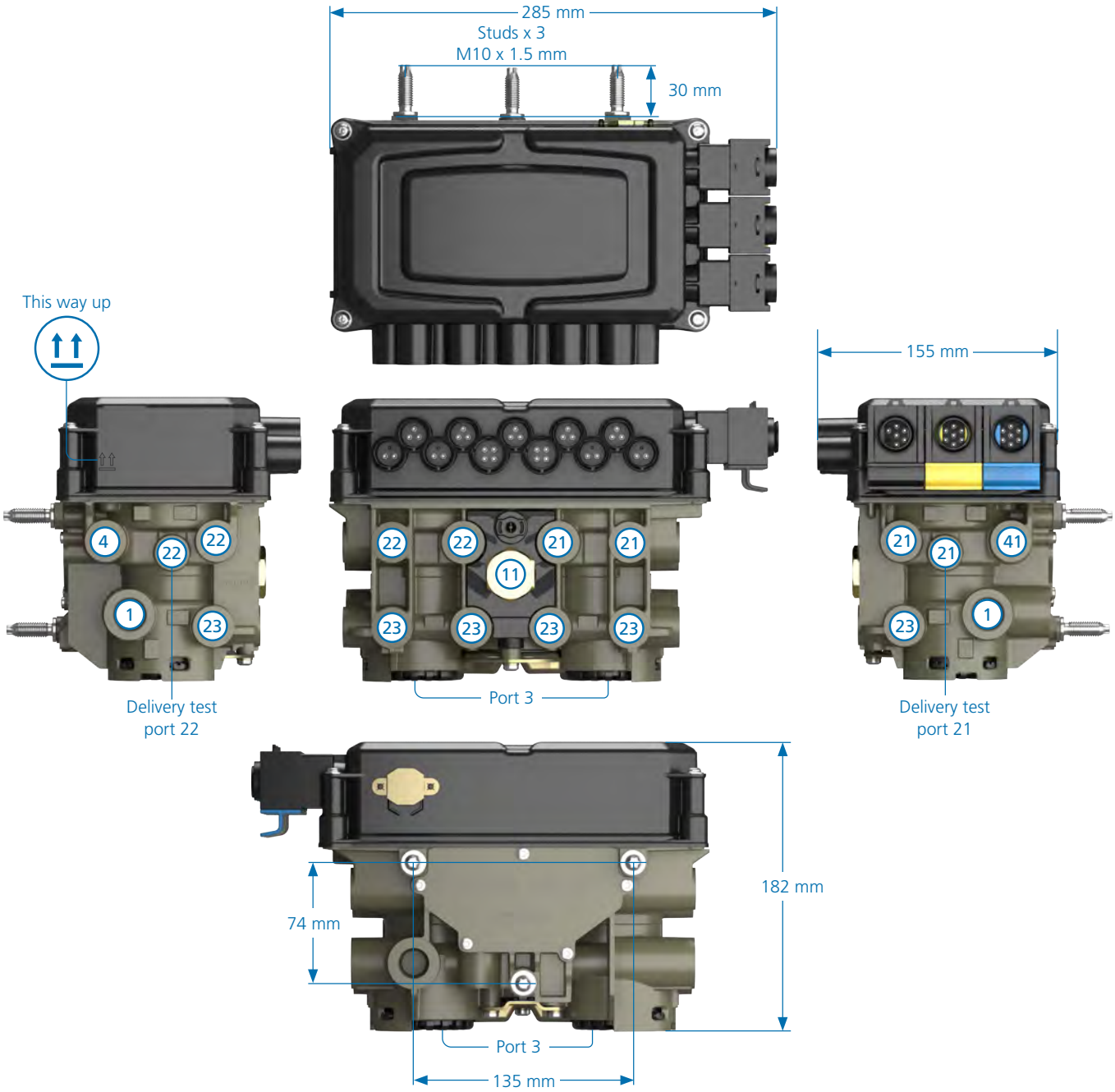

Approximate mass of assembly: 5.75 Kg

Port	Description	Notes
1	Reservoir port	M22 x 1.5 mm
3	Exhaust port	
4	Control port	M16 x 1.5 mm
11	Anti - compounding port	M16 x 1.5 mm
21/22	Delivery ports	M16 x 1.5 mm
21/22	Test point port	M12 x 1.5 mm
23	Spring brake port	M16 x 1.5 mm
41	Air suspension port	M16 x 1.5 mm

Slave assembly

Note:
The EB+ Gen3 Slave assembly (ECU & valve) is only supplied as one complete unit that cannot / should not be separated.

Approximate mass of assembly: 3.2 Kg

Port	Description	Notes
1	Reservoir port	M22 x 1.5 mm
2	Delivery ports	M16 x 1.5 mm
3	Exhaust port	-
4	Control port	M16 x 1.5 mm
41	Air suspension port	M16 x 1.5 mm

System configurations

Semi & centre axle trailers - side by side (SxS)

2S / 2M

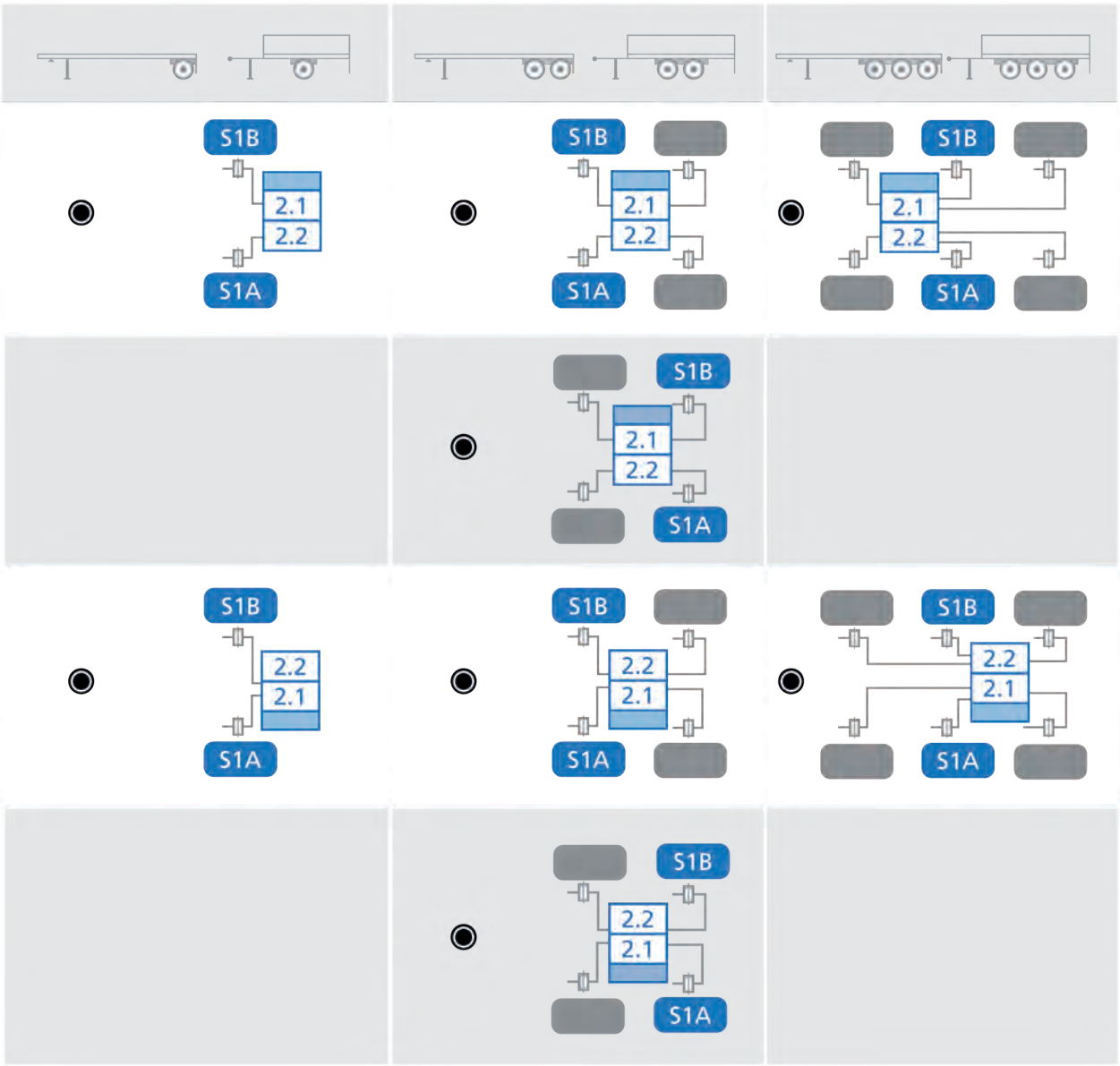

Notes (applicable to all above diagrams):

- Any axle without directly controlled wheels may be a lift axle
- Any axle may be a steered axle

Key

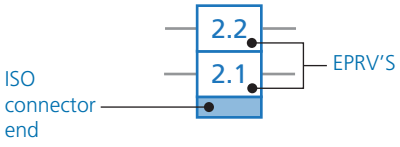

Semi & centre axle trailers - side by side (SxS)

4S / 2M

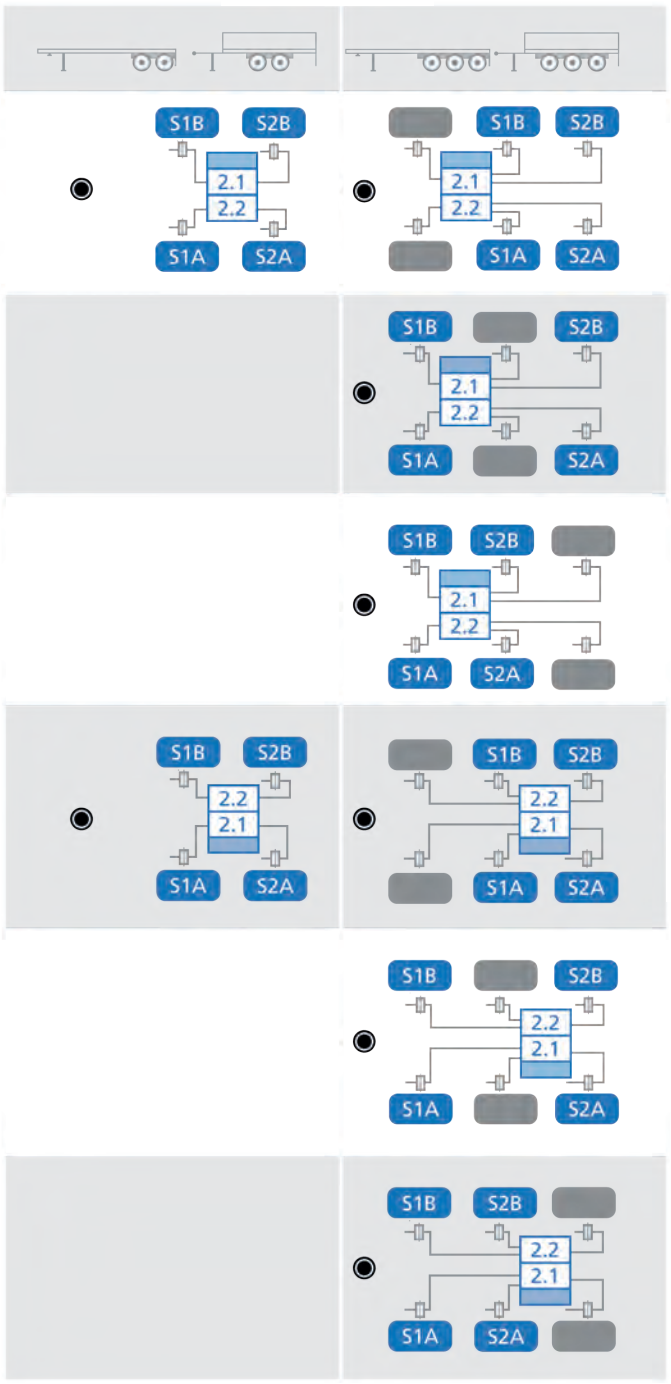

Notes (applicable to all above diagrams):

- Any axle (but only one at a time) directly controlled axle may be a lift axle
- Any axle may be a steered axle

Key

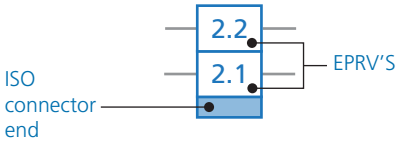

Semi & centre axle trailers - side by side (SxS) & select low valve (SL)

2S / 2M

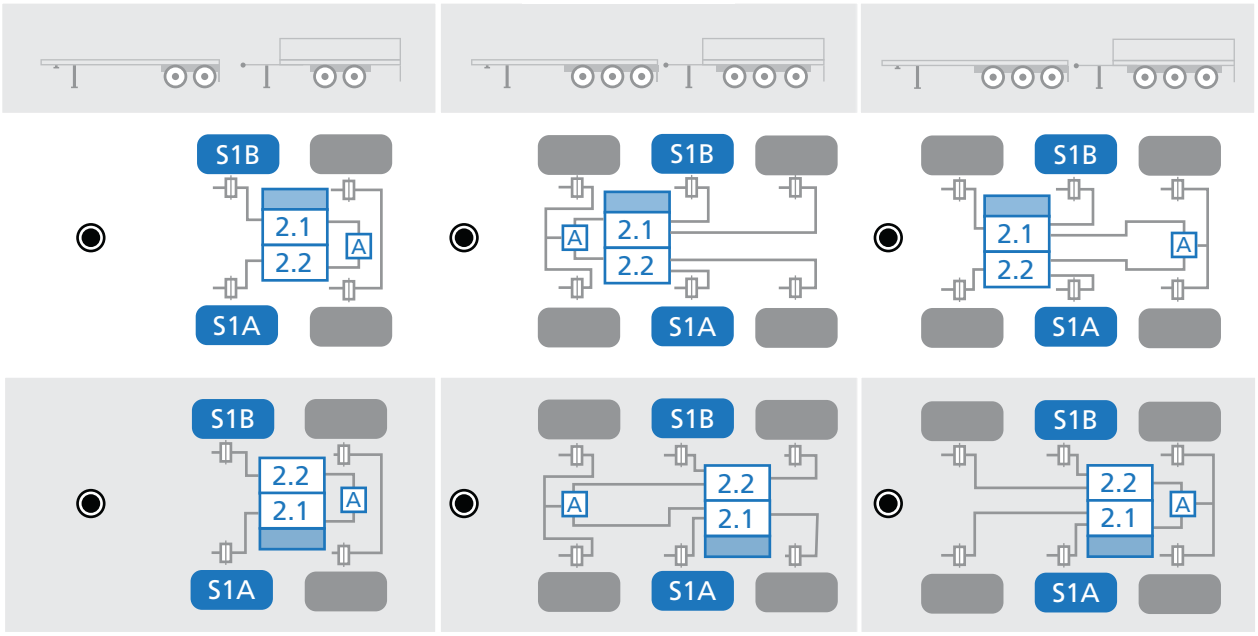

Note (applicable to all above diagrams):

Any valve without directly controlled wheels may be a lift axle

Key

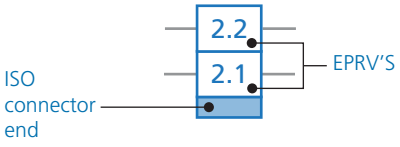

A = Select Low Valve

Semi & centre axle trailers - side by side (SxS), select low valve (SL) & relay valve

2S / 2M

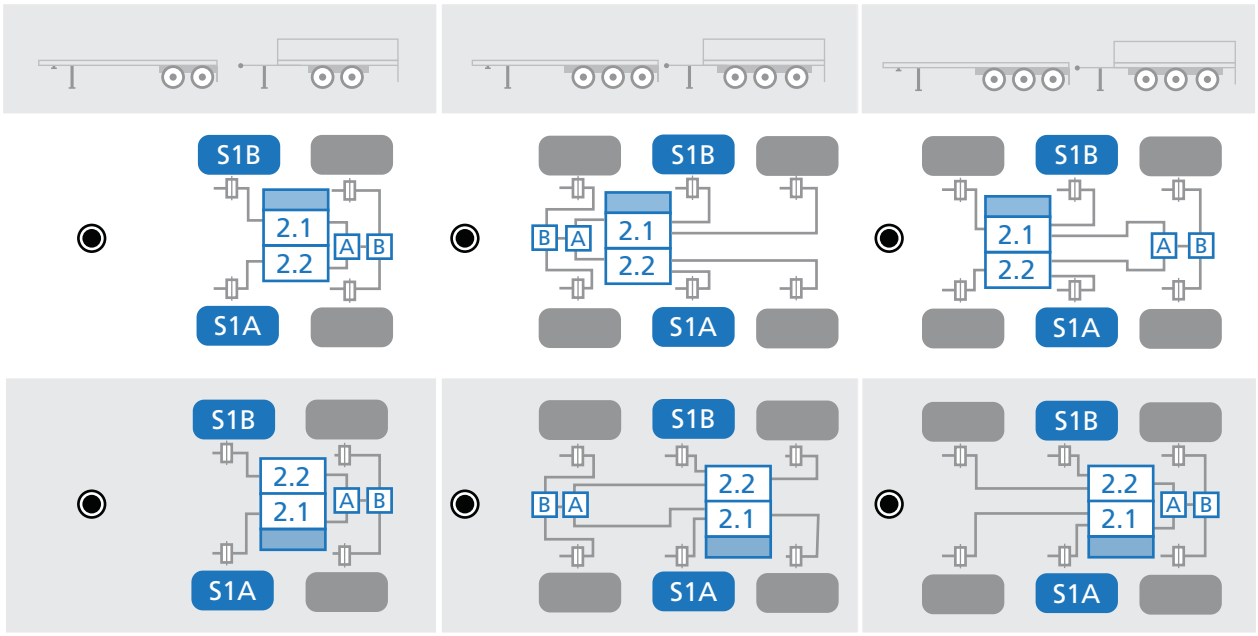

Note (applicable to all above diagrams):

Any valve without directly controlled wheels may be a lift axle

Key

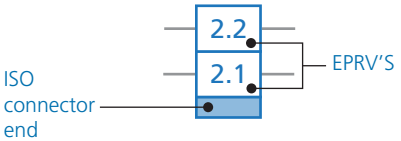

A = Select Low Valve

B = Relay Valve

Semi & centre axle trailers - axle by axle ASC front, SL rear

4S / 2M

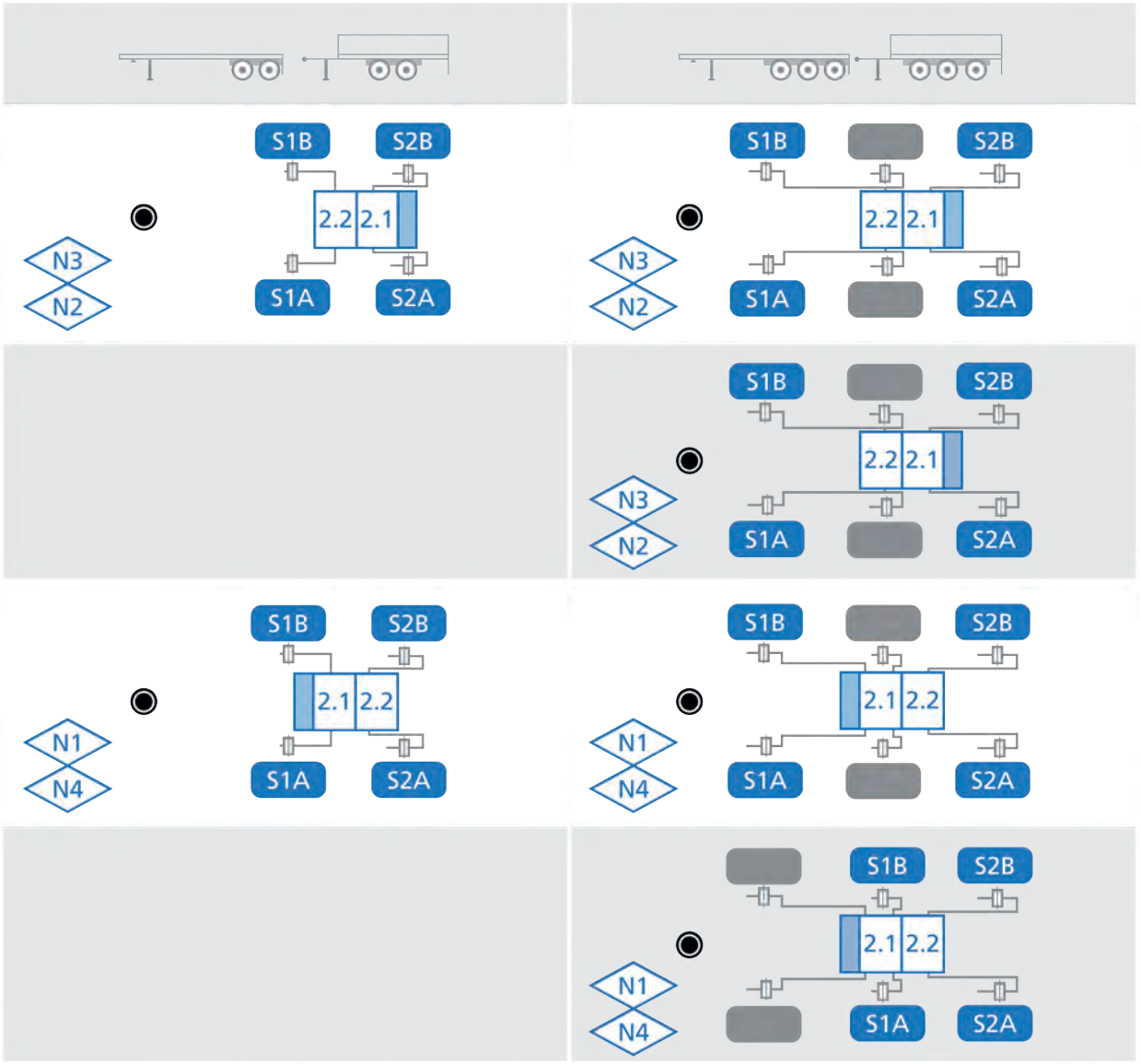

Notes (applicable to all above diagrams):

- Sensed axles cannot be lifted
- Any axle without directly controlled wheels (not sensed) may be a lift axle
- Any axle may be a steered axle

Key

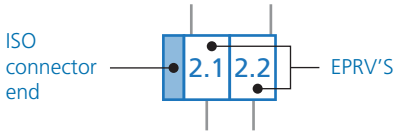

N1-N4 are selectable options set by Haldex or the vehicle manufacturer

- N1 Adaptive surface control 2.1 (ASC)
- N2 Select low 2.1 (SL)
- N3 Adaptive surface control 2.2 (ASC)
- N4 Select low 2.2 (SL)

Semi & centre axle trailers - axle by axle ASC front, SL rear

4S / 2M

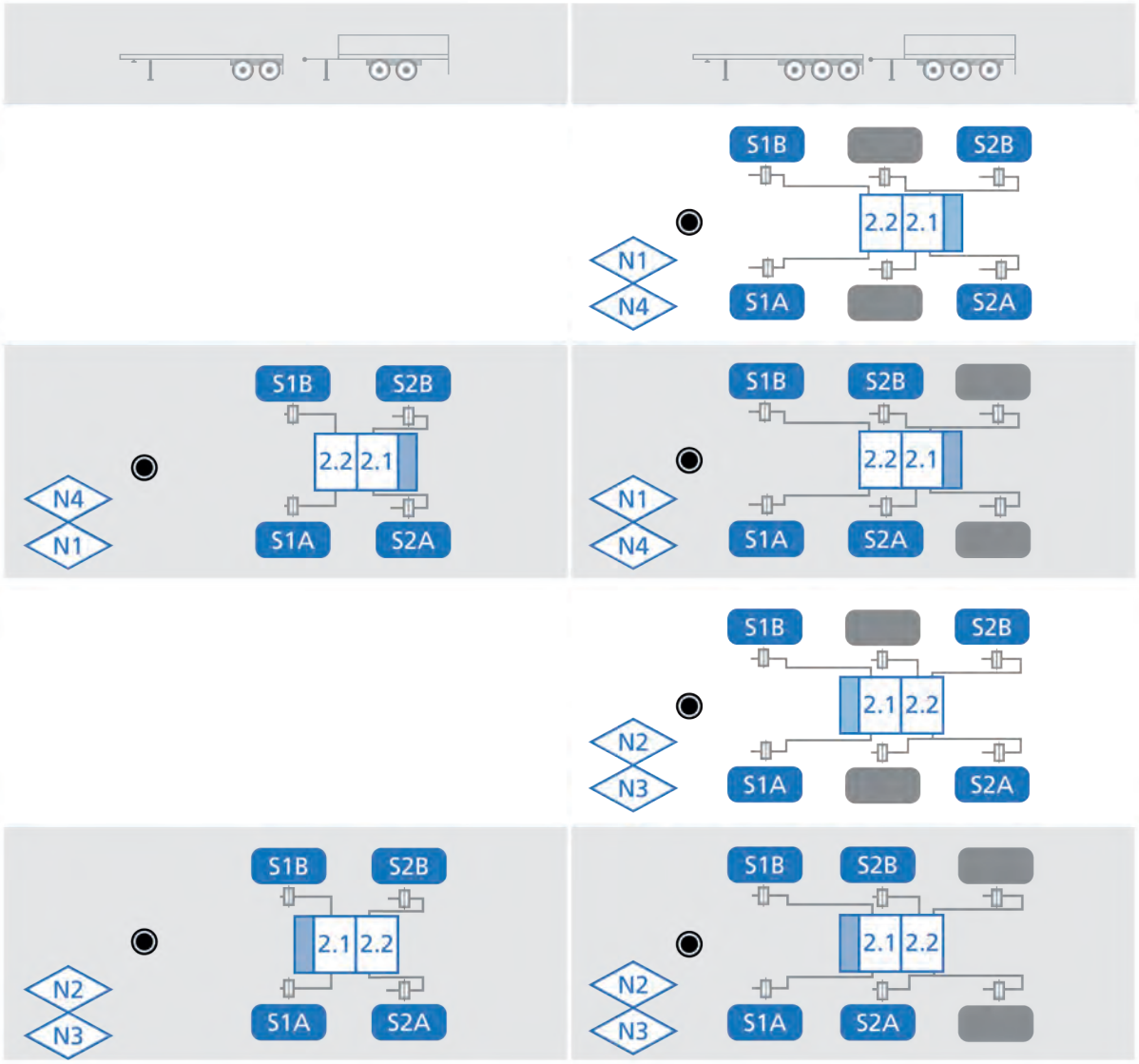

Notes (applicable to all above diagrams):

- Sensed axles cannot be lifted
- Any axle without directly controlled wheels (not sensed) may be a lift axle
- Any axle may be a steered axle

Key

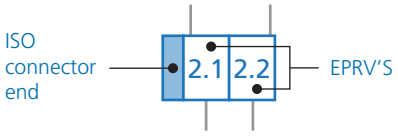

N1-N4 are selectable options set by Haldex or vehicle manufacturer

- N1 Adaptive surface control 2.1 (ASC)
- N2 Select low 2.1 (SL)
- N3 Adaptive surface control 2.2 (ASC)
- N4 Select low 2.2 (SL)

Semi & centre axle trailers

4S / 3M

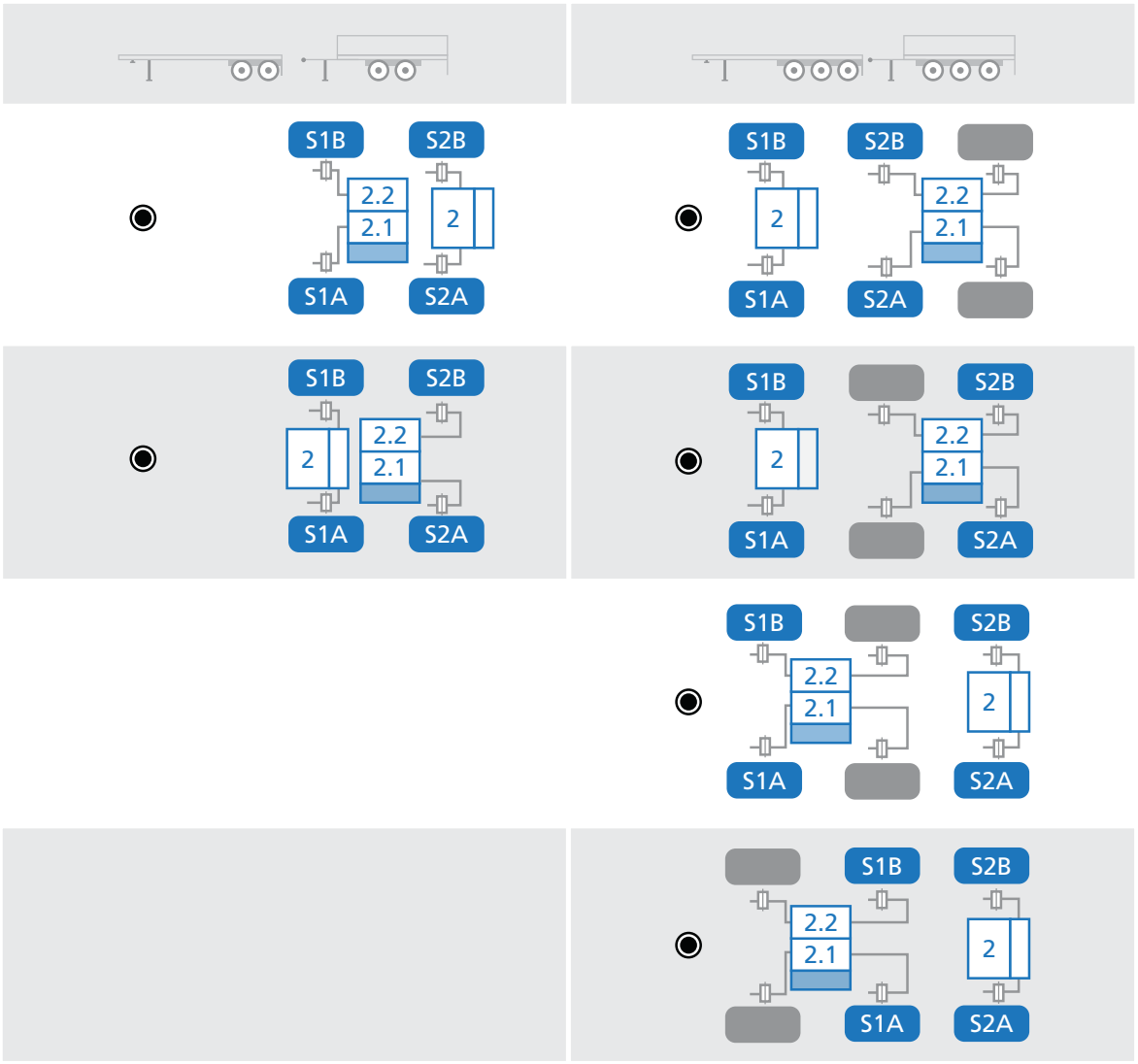

Notes (applicable to all above diagrams):

- Any axle without directly controlled wheels may be a lift axle
- Any axle may be a steered axle

N1-N4 are selectable options set by Haldex or vehicle manufacturer

- N1 Master ECU is mounted to EPRV's 21/22. All sensors must be connected to this Master ECU
- N2 Directly controlled wheels connected pneumatically to EPRV's 21/22 cannot be lifted
- N3 Slave ECU is mounted to EPRV 2 and is controlled by Master ECU
- N4 Slave ECU / EPRV 2 is shown facing rear but can also be installed facing forward, left or right sensed wheel connected pneumatically to EPRV 2 can be lifted

Key

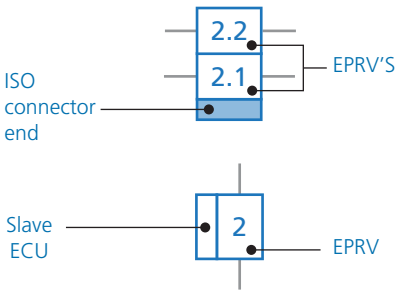

Semi & centre axle trailers

4S / 3M

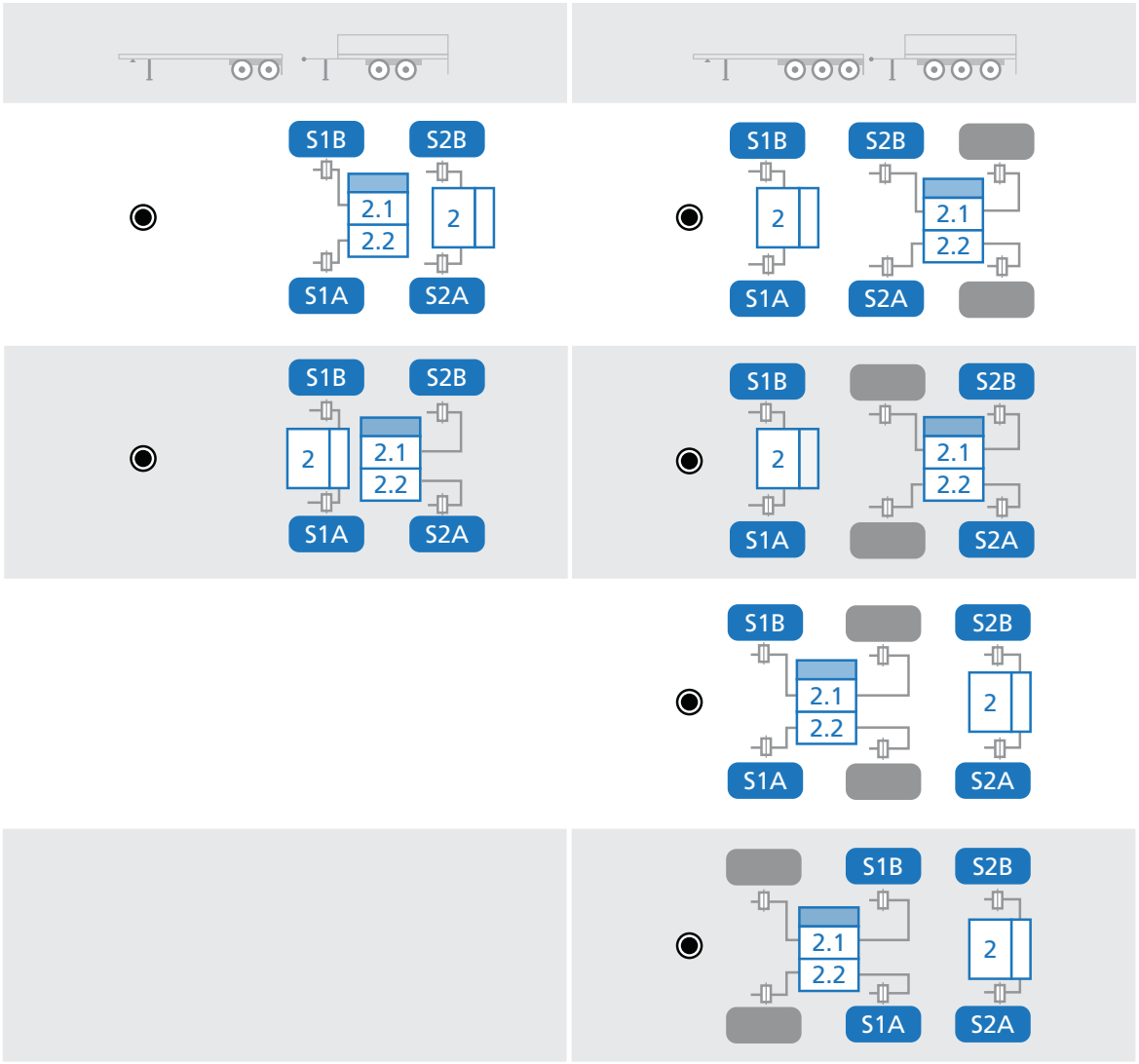

Notes (applicable to all above diagrams):

- Any axle without directly controlled wheels may be a lift axle
- Any axle may be a steered axle

N1-N4 are selectable options set by Haldex or vehicle manufacturer

- N1 Master ECU is mounted to EPRV's 21/22. All sensors must be connected to this Master ECU
- N2 Directly controlled wheels connected pneumatically to EPRV's 21/22 cannot be lifted
- N3 Slave ECU is mounted to EPRV 2 and is controlled by Master ECU
- N4 Slave ECU / EPRV 2 is shown facing rear but can also be installed facing forward, left or right sensed wheel connected pneumatically to EPRV 2 can be lifted

Key

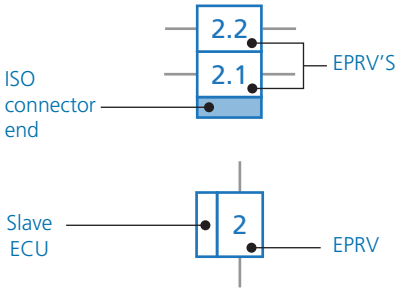

Full trailers

4S / 3M

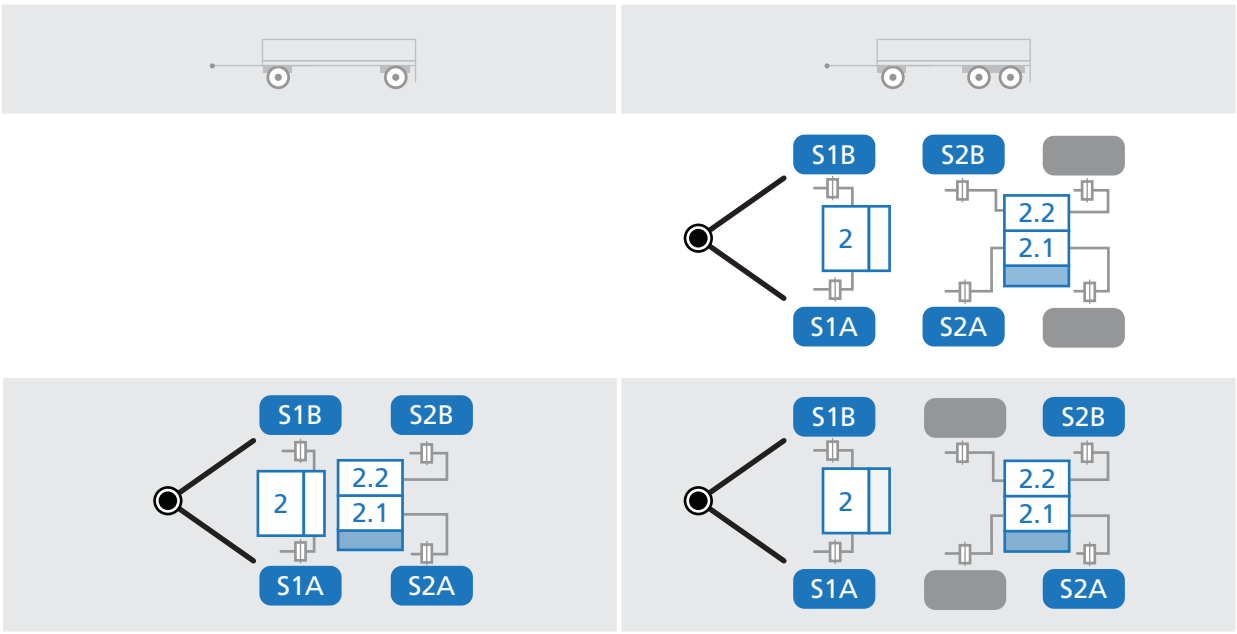

- Notes (applicable to all above diagrams):
- Sensed axles cannot be lifted
- Any axle without directly controlled wheels may be a lifted
- N1 Master ECU is mounted to EPRV's 21/22. All sensors must be connected to this Master ECU
- N2 Slave ECU is mounted to EPRV 2 and is controlled by Master ECU. Slave ECU / EPRV 2 is shown facing rear but can also be installed facing forward, left or right, as EPRV 2 is always select low control

Key

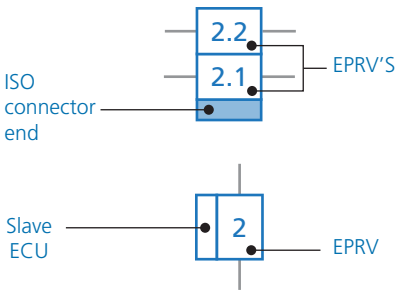

Full trailers

4S / 3M

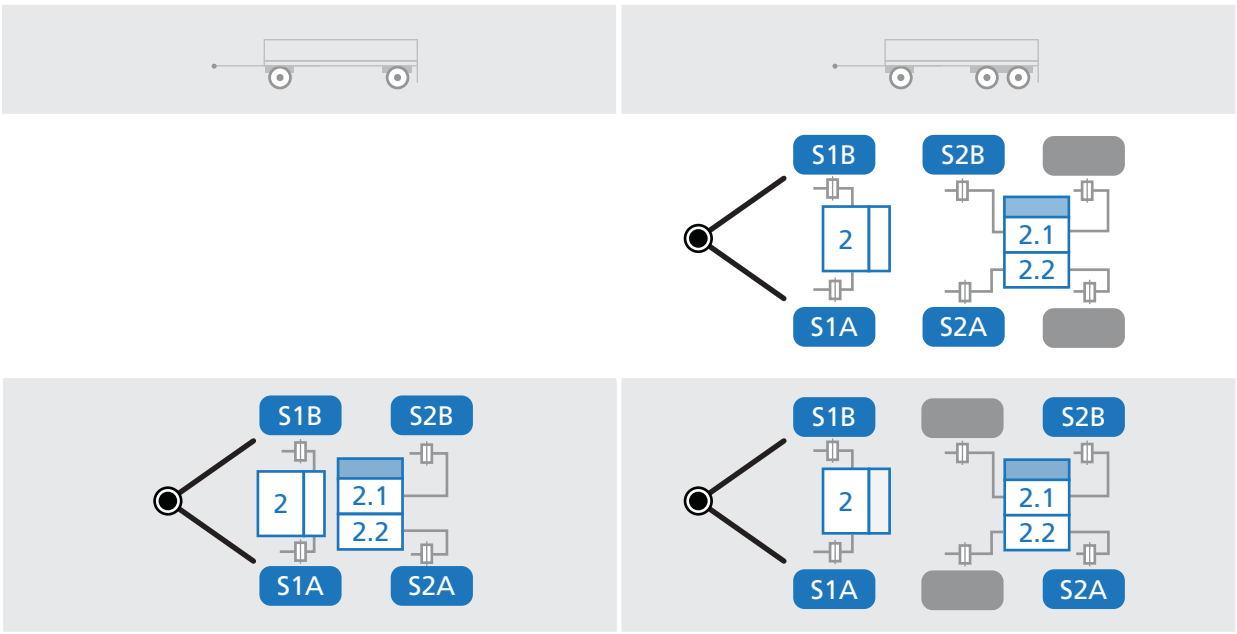

Notes (applicable to all above diagrams):

- Sensed axles cannot be lifted.
- Any axle without directly controlled wheels may be lifted.
- N1 Master ECU is mounted to EPRV's 21/22. All sensors must be connected to this Master ECU
- N2 Slave ECU is mounted to EPRV 2 and is controlled by Master ECU. Slave ECU / EPRV 2 is shown facing rear but can also be installed facing forward, left or right, as EPRV 2 is always select low control

Key

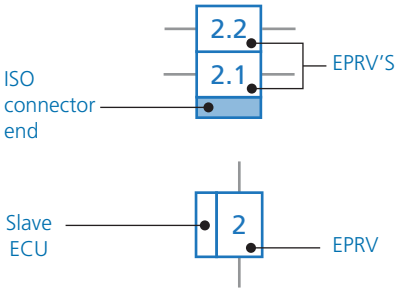

Semi trailers

4S / 3M

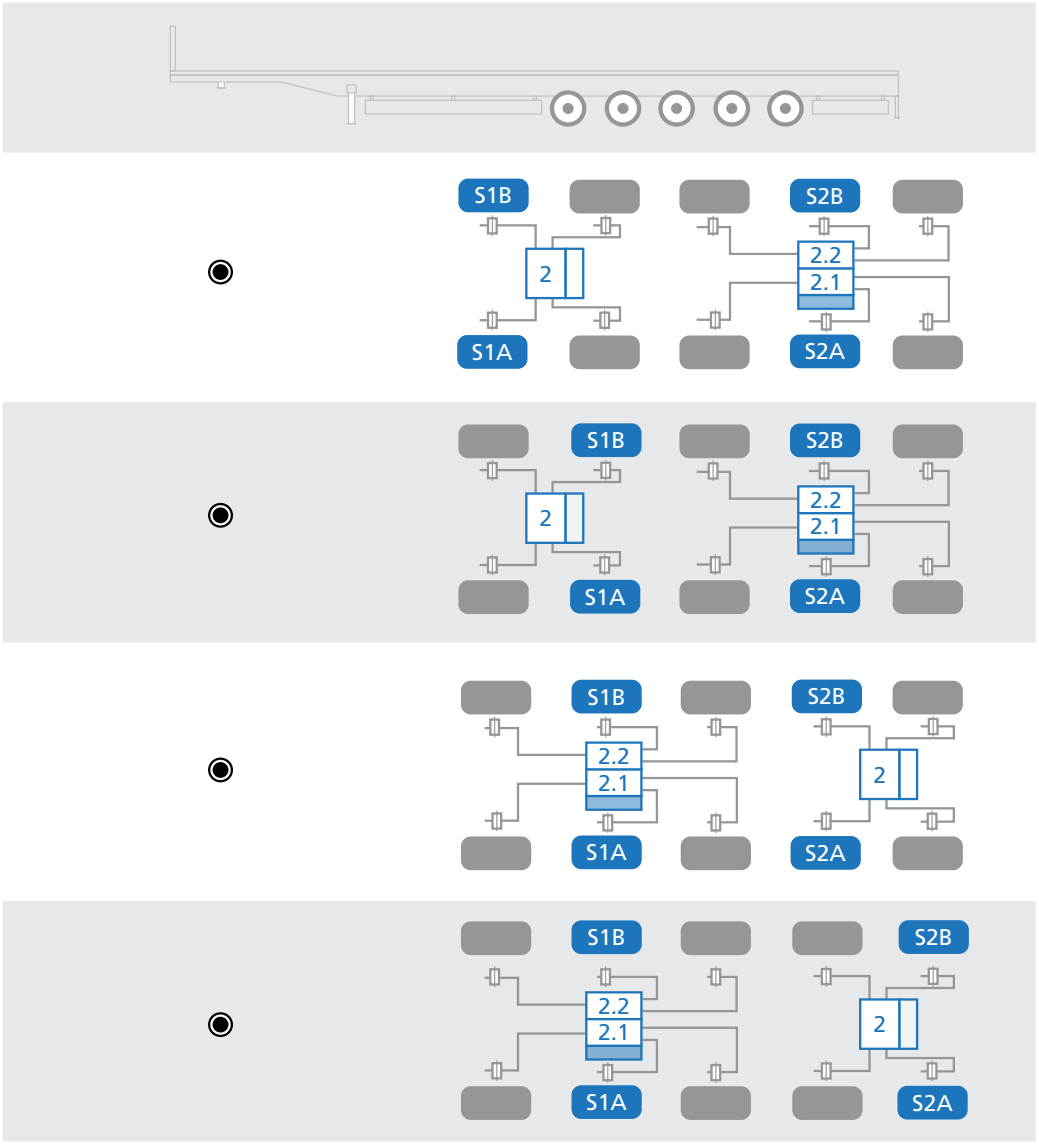

Notes (applicable to all above diagrams):

- N1 Master ECU is mounted to EPRV's 21/22. All sensors must be connected to this Master ECU
- N2 Directly controlled wheels connected pneumatically to EPRV's 21/22 cannot be lifted
- N3 Slave ECU is mounted to EPRV 2 and is controlled by Master ECU. Slave ECU / EPRV 2 is shown facing rear but can also be installed facing forward, left or right, as EPRV 2 is always select low control
- N4 Sensed wheels connected pneumatically to EPRV 2 can be lifted but corresponding indirectly controlled wheels must be lifted in parallel
- N5 Any axle without directly controlled wheels may be lifted
- N6 Any axle may be a steered axle

Key

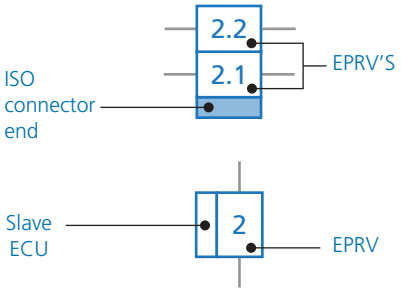

Semi trailers

4S / 3M

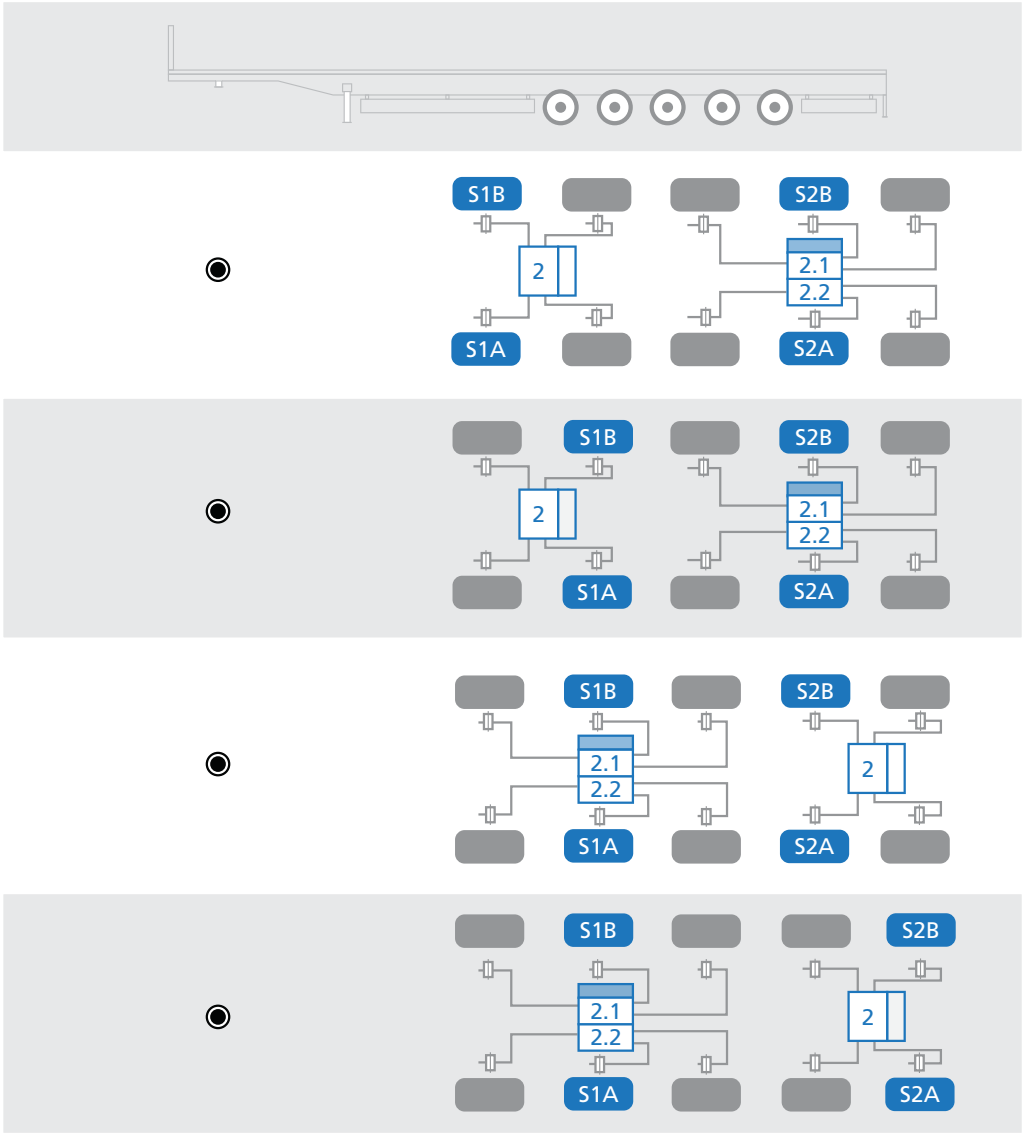

Notes (applicable to all above diagrams):

- N1 Master ECU is mounted to EPRV's 21/22. All sensors must be connected to this Master ECU
- N2 Directly controlled wheels connected pneumatically to EPRV's 21/22 cannot be lifted
- N3 Slave ECU is mounted to EPRV 2 and is controlled by Master ECU. Slave ECU / EPRV 2 is shown facing rear but can also be installed facing forward, left or right, as EPRV 2 is always select low control
- N4 Sensed wheels connected pneumatically to EPRV 2 can be lifted but corresponding indirectly controlled wheels must be lifted in parallel
- N5 Any axle without directly controlled wheels may be lifted
- N6 Any axle may be a steered axle

Key

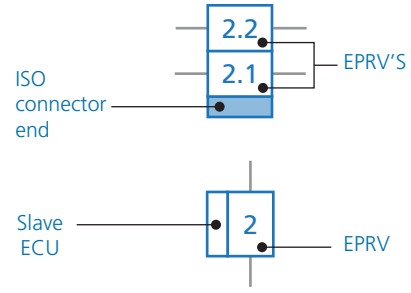

Semi trailers

4S / 3M

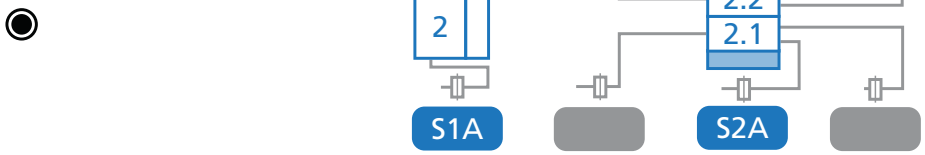

Notes (applicable to all above diagrams):

- N1 Master ECU is mounted to EPRV's 21/22. All sensors must be connected to this Master ECU
- N2 Directly controlled wheels connected pneumatically to EPRV's 21/22 cannot be lifted
- N3 Slave ECU is mounted to EPRV 2 and is controlled by Master ECU. Slave ECU / EPRV 2 is shown facing rear but can also be installed facing forward, left or right, as EPRV 2 is always select low control
- N4 Sensed wheels connected pneumatically to EPRV 2 can be lifted but corresponding indirectly controlled wheels must be lifted in parallel
- N5 Any axle without directly controlled wheels may be lifted
- N6 Any axle may be a steered axle

Key

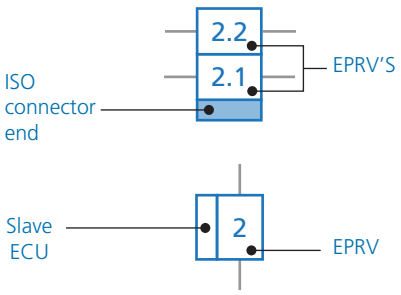

Semi trailers

4S / 3M

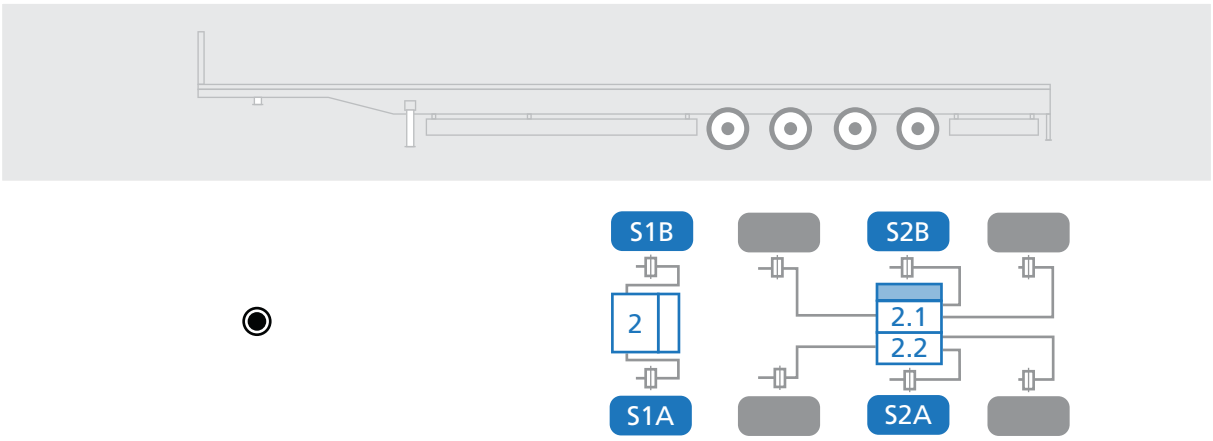

Notes (applicable to all above diagrams):

- N1 Master ECU is mounted to EPRV's 21/22. All sensors must be connected to this Master ECU
- N2 Directly controlled wheels connected pneumatically to EPRV's 21/22 cannot be lifted
- N3 Slave ECU is mounted to EPRV 2 and is controlled by Master ECU. Slave ECU / EPRV 2 is shown facing rear but can also be installed facing forward, left or right, as EPRV 2 is always select low control
- N4 Sensed wheels connected pneumatically to EPRV 2 can be lifted but corresponding indirectly controlled wheels must be lifted in parallel
- N5 Any axle without directly controlled wheels may be lifted
- N6 Any axle may be a steered axle

Key

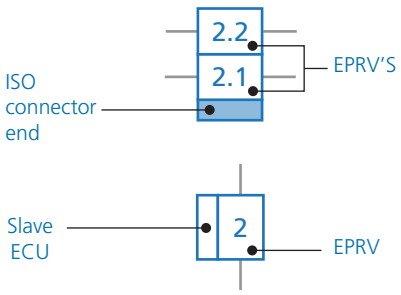

Semi trailers

4S / 3M

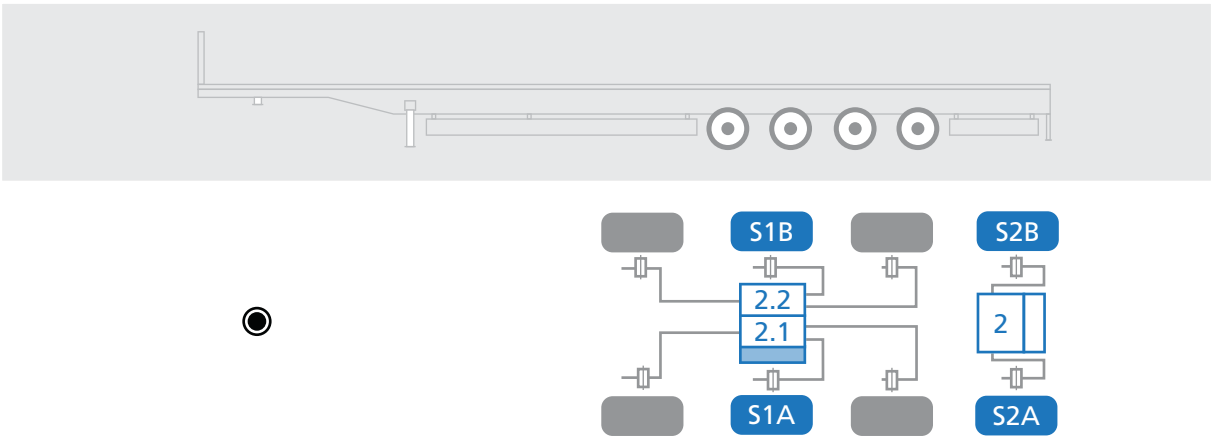

Notes (applicable to all above diagrams):

- N1 Master ECU is mounted to EPRV's 21/22. All sensors must be connected to this Master ECU
- N2 Directly controlled wheels connected pneumatically to EPRV's 21/22 cannot be lifted
- N3 Slave ECU is mounted to EPRV 2 and is controlled by Master ECU. Slave ECU / EPRV 2 is shown facing rear but can also be installed facing forward, left or right, as EPRV 2 is always select low control
- N4 Sensed wheels connected pneumatically to EPRV 2 can be lifted but corresponding indirectly controlled wheels must be lifted in parallel
- N5 Any axle without directly controlled wheels may be lifted
- N6 Any axle may be a steered axle

Key

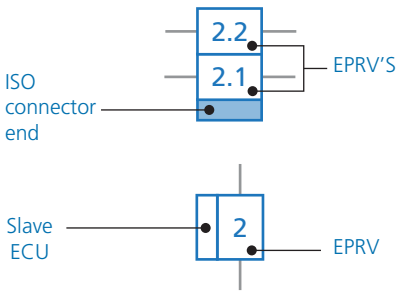

Semi trailers

4S / 3M

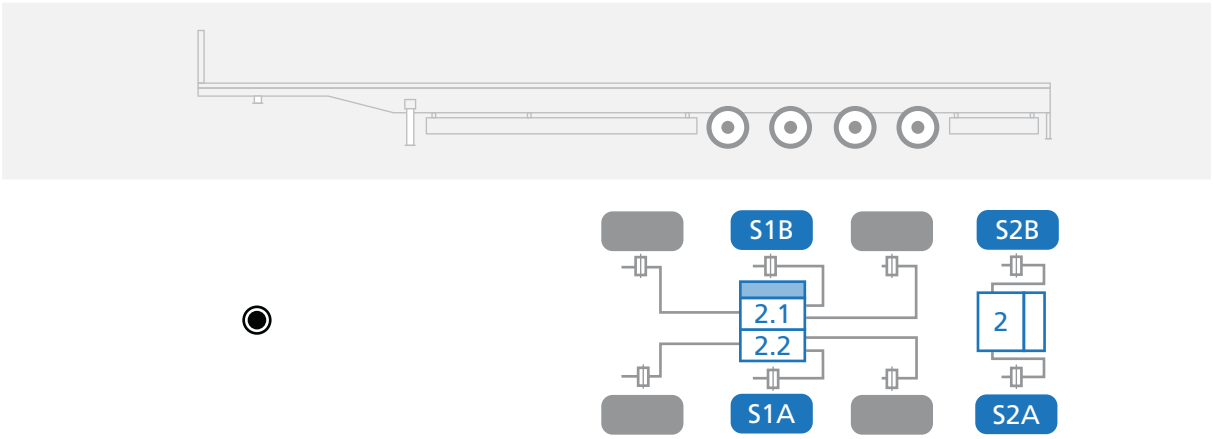

Notes (applicable to all above diagrams):

- N1 Master ECU is mounted to EPRV's 21/22. All sensors must be connected to this Master ECU
- N2 Directly controlled wheels connected pneumatically to EPRV's 21/22 cannot be lifted
- N3 Slave ECU is mounted to EPRV 2 and is controlled by Master ECU. Slave ECU / EPRV 2 is shown facing rear but can also be installed facing forward, left or right, as EPRV 2 is always select low control
- N4 Sensed wheels connected pneumatically to EPRV 2 can be lifted but corresponding indirectly controlled wheels must be lifted in parallel
- N5 Any axle without directly controlled wheels may be lifted
- N6 Any axle may be a steered axle

Key

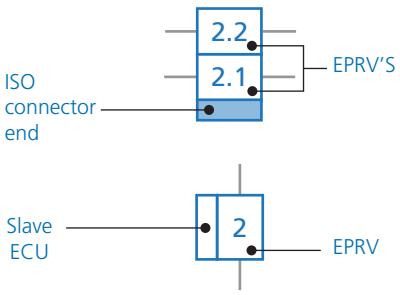

Semi trailers

4S / 3M

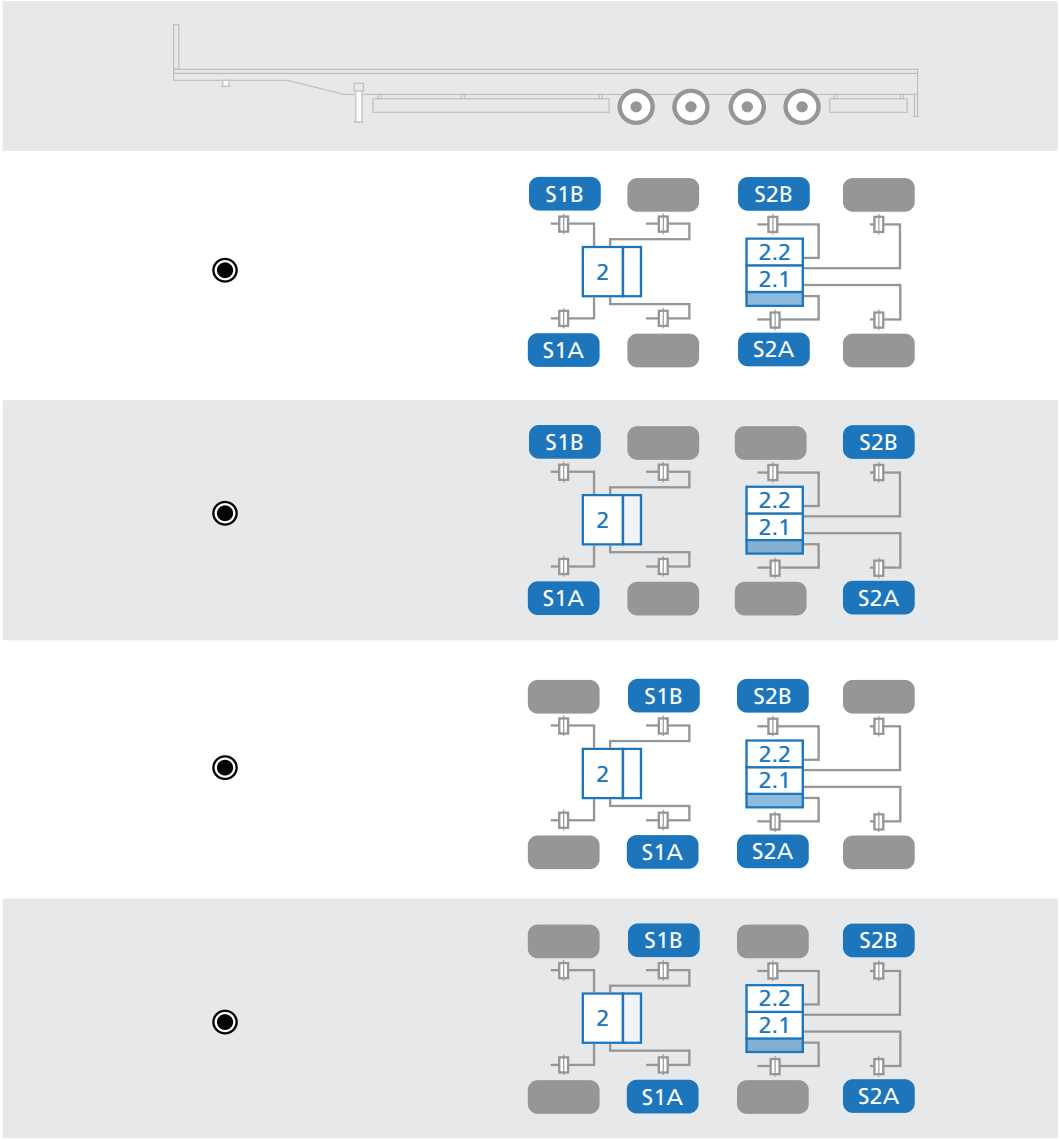

Notes (applicable to all above diagrams):

- N1 Master ECU is mounted to EPRV's 21/22. All sensors must be connected to this Master ECU
- N2 Directly controlled wheels connected pneumatically to EPRV's 21/22 cannot be lifted
- N3 Slave ECU is mounted to EPRV 2 and is controlled by Master ECU. Slave ECU / EPRV 2 is shown facing rear but can also be installed facing forward, left or right, as EPRV 2 is always select low control
- N4 Sensed wheels connected pneumatically to EPRV 2 can be lifted but corresponding indirectly controlled wheels must be lifted in parallel
- N5 Any axle without directly controlled wheels may be lifted
- N6 Any axle may be a steered axle

Key

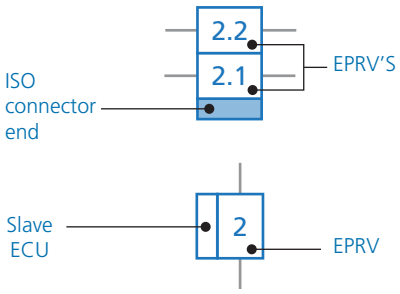

Semi trailers

4S / 3M

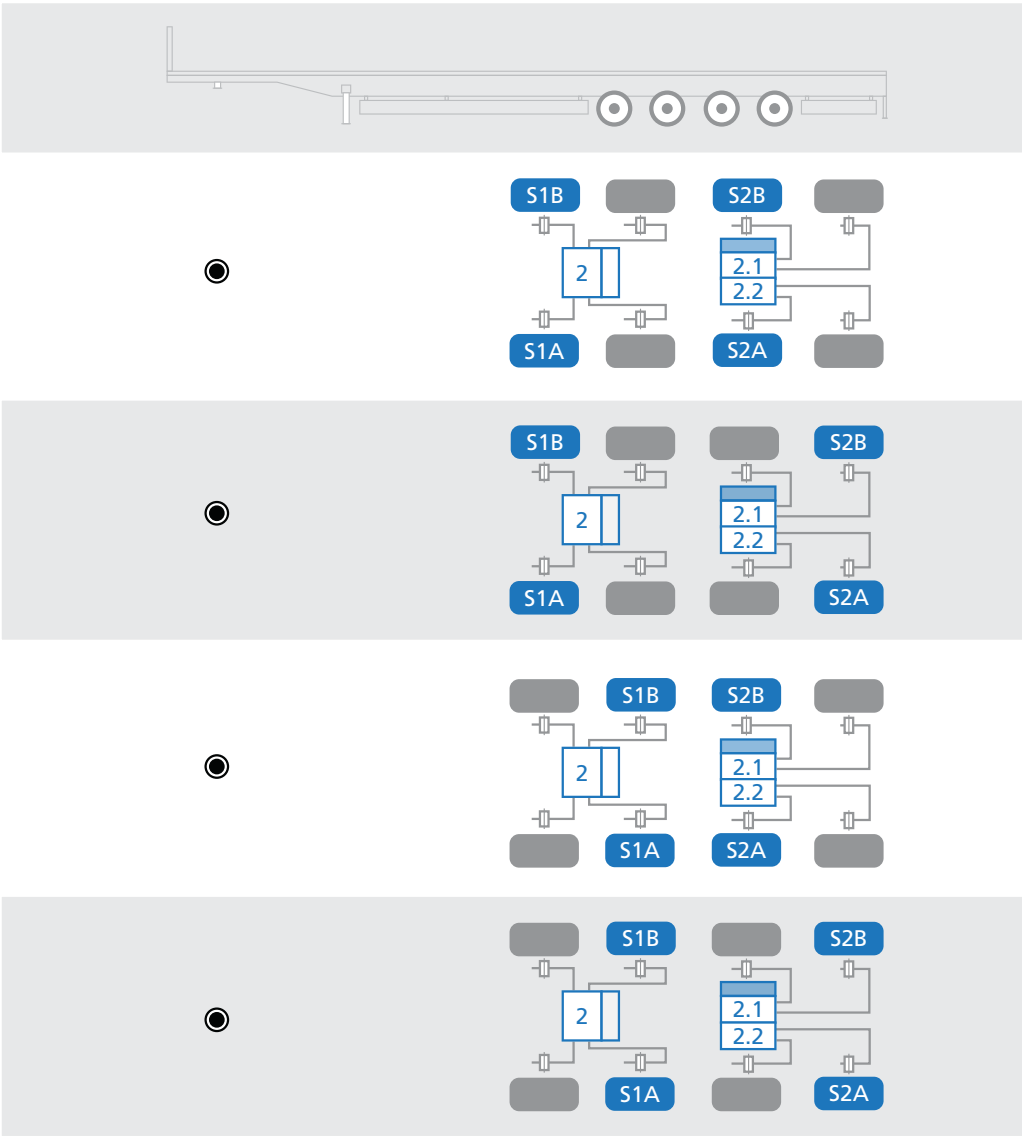

Notes (applicable to all above diagrams):

- N1 Master ECU is mounted to EPRV's 21/22. All sensors must be connected to this Master ECU
- N2 Directly controlled wheels connected pneumatically to EPRV's 21/22 cannot be lifted
- N3 Slave ECU is mounted to EPRV 2 and is controlled by Master ECU. Slave ECU / EPRV 2 is shown facing rear but can also be installed facing forward, left or right, as EPRV 2 is always select low control
- N4 Sensed wheels connected pneumatically to EPRV 2 can be lifted but corresponding indirectly controlled wheels must be lifted in parallel
- N5 Any axle without directly controlled wheels may be lifted
- N6 Any axle may be a steered axle

Key

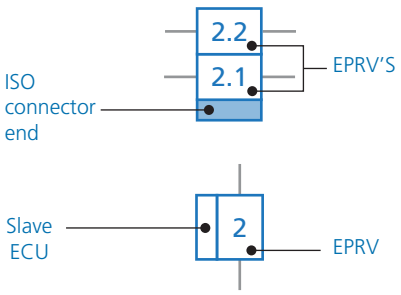

Semi trailers

4S / 3M

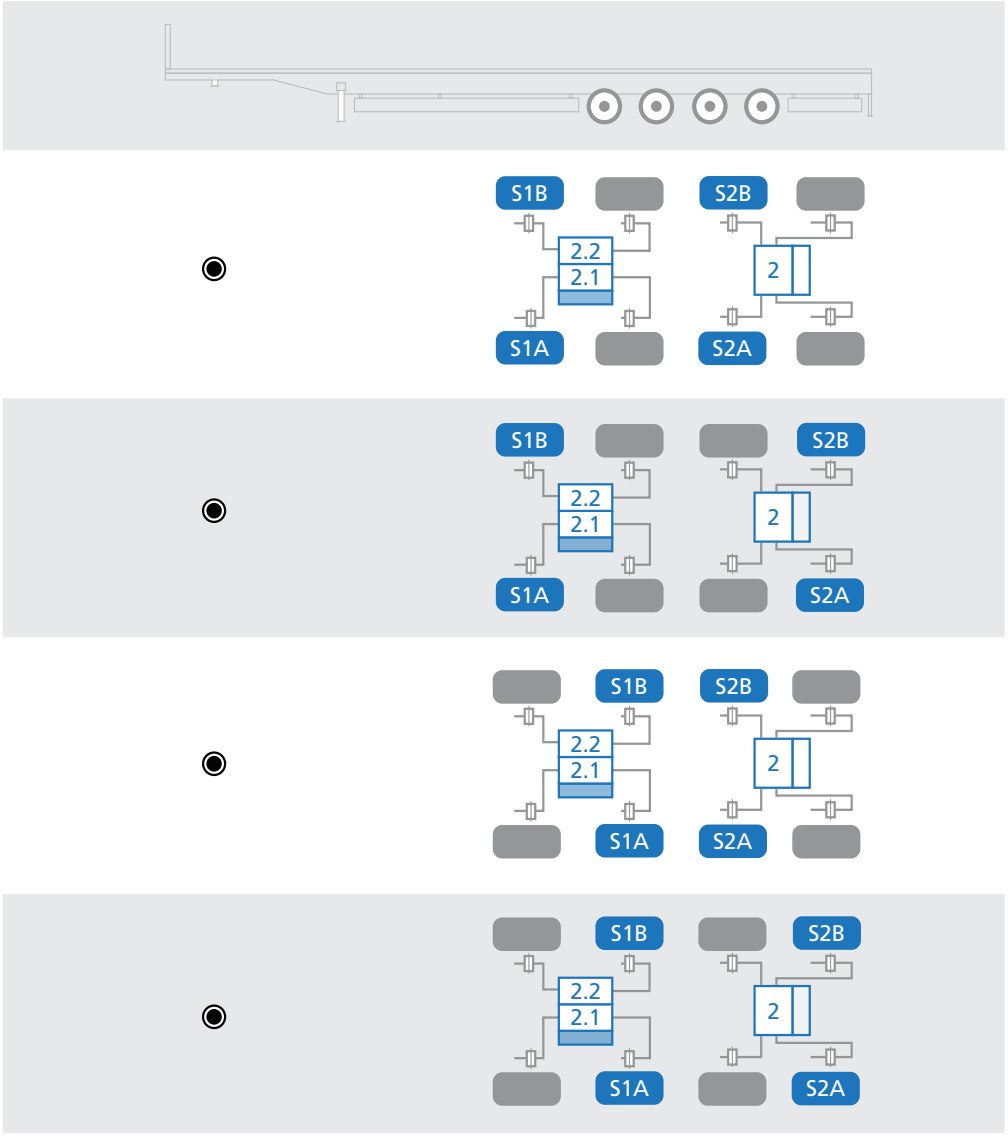

Notes (applicable to all above diagrams):

- N1 Master ECU is mounted to EPRV's 21/22. All sensors must be connected to this Master ECU
- N2 Directly controlled wheels connected pneumatically to EPRV's 21/22 cannot be lifted
- N3 Slave ECU is mounted to EPRV 2 and is controlled by Master ECU. Slave ECU / EPRV 2 is shown facing rear but can also be installed facing forward, left or right, as EPRV 2 is always select low control
- N4 Sensed wheels connected pneumatically to EPRV 2 can be lifted but corresponding indirectly controlled wheels must be lifted in parallel
- N5 Any axle without directly controlled wheels may be lifted
- N6 Any axle may be a steered axle

Key

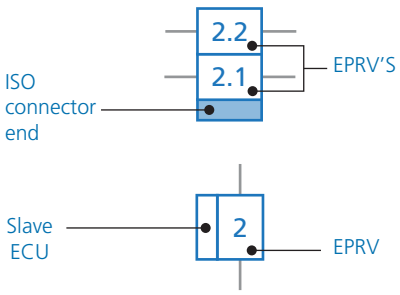

Semi trailers

4S / 3M

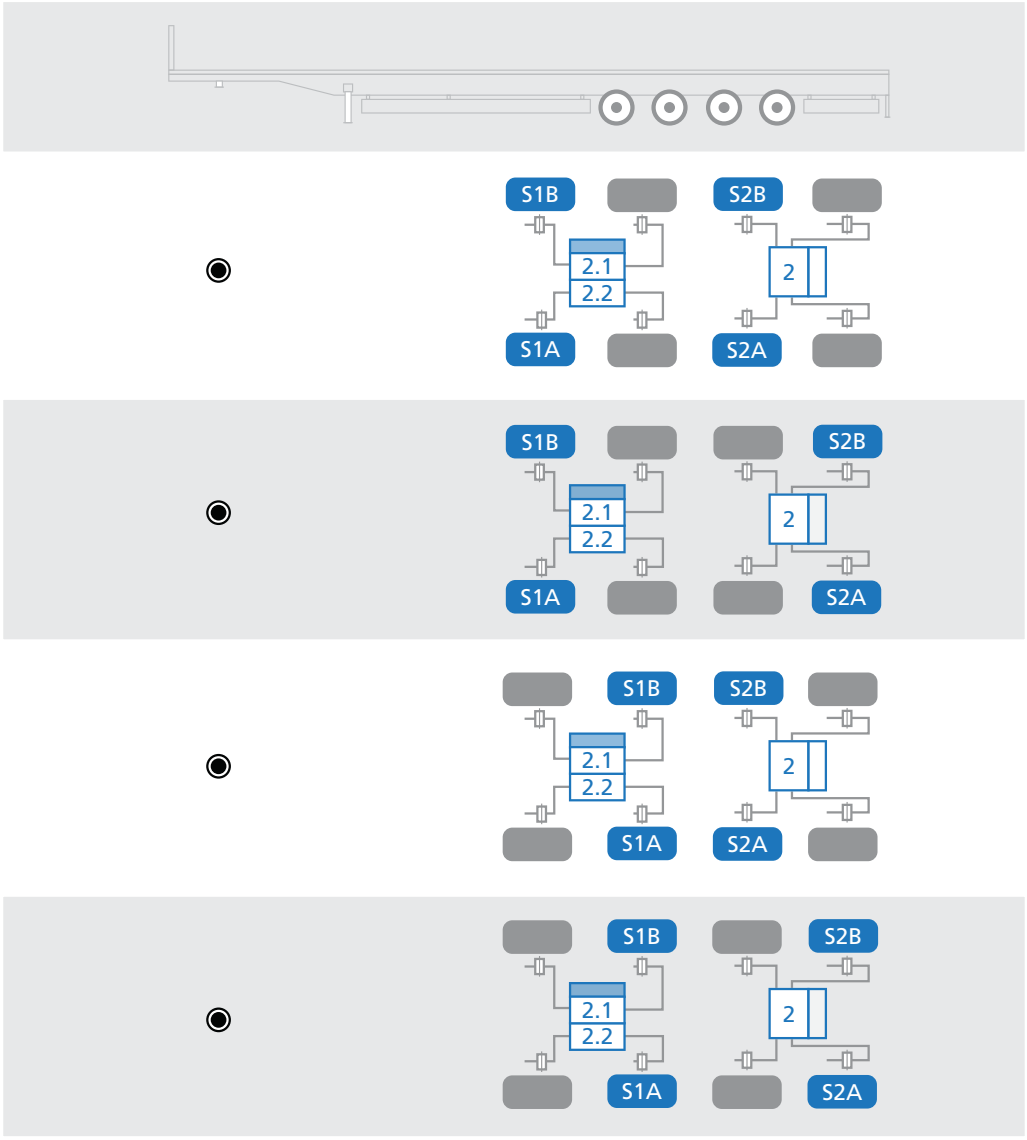

Notes (applicable to all above diagrams):

- N1 Master ECU is mounted to EPRV's 21/22. All sensors must be connected to this Master ECU
- N2 Directly controlled wheels connected pneumatically to EPRV's 21/22 cannot be lifted
- N3 Slave ECU is mounted to EPRV 2 and is controlled by Master ECU. Slave ECU / EPRV 2 is shown facing rear but can also be installed facing forward, left or right, as EPRV 2 is always select low control
- N4 Sensed wheels connected pneumatically to EPRV 2 can be lifted but corresponding indirectly controlled wheels must be lifted in parallel
- N5 Any axle without directly controlled wheels may be lifted
- N6 Any axle may be a steered axle

Key

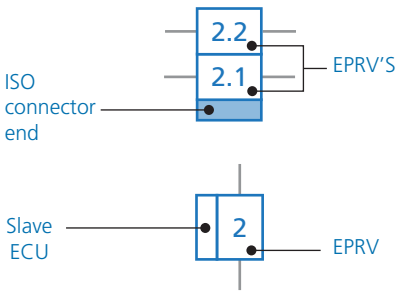

Full trailers

4S / 3M

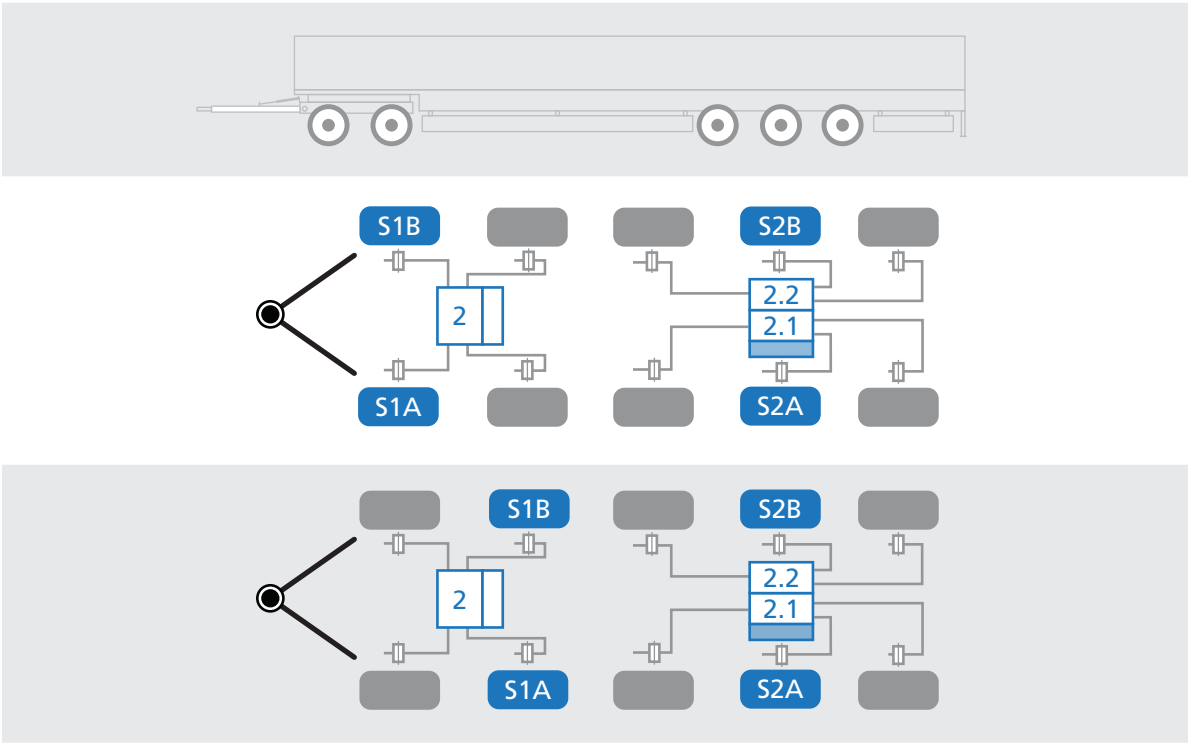

Notes (applicable to all above diagrams):

- N1 Master ECU is mounted to EPRV's 21/22. All sensors must be connected to this Master ECU
- N2 Directly controlled wheels connected pneumatically to EPRV's 21/22 cannot be lifted
- N3 Slave ECU is mounted to EPRV 2 and is controlled by Master ECU. Slave ECU / EPRV 2 is shown facing rear but can also be installed facing forward, left or right, as EPRV 2 is always select low control
- N4 Any axle without directly controlled wheels may be lifted
- N5 Any axle may be a steered axle

Key

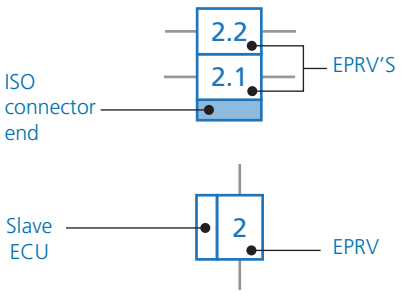

Full trailers

4S / 3M

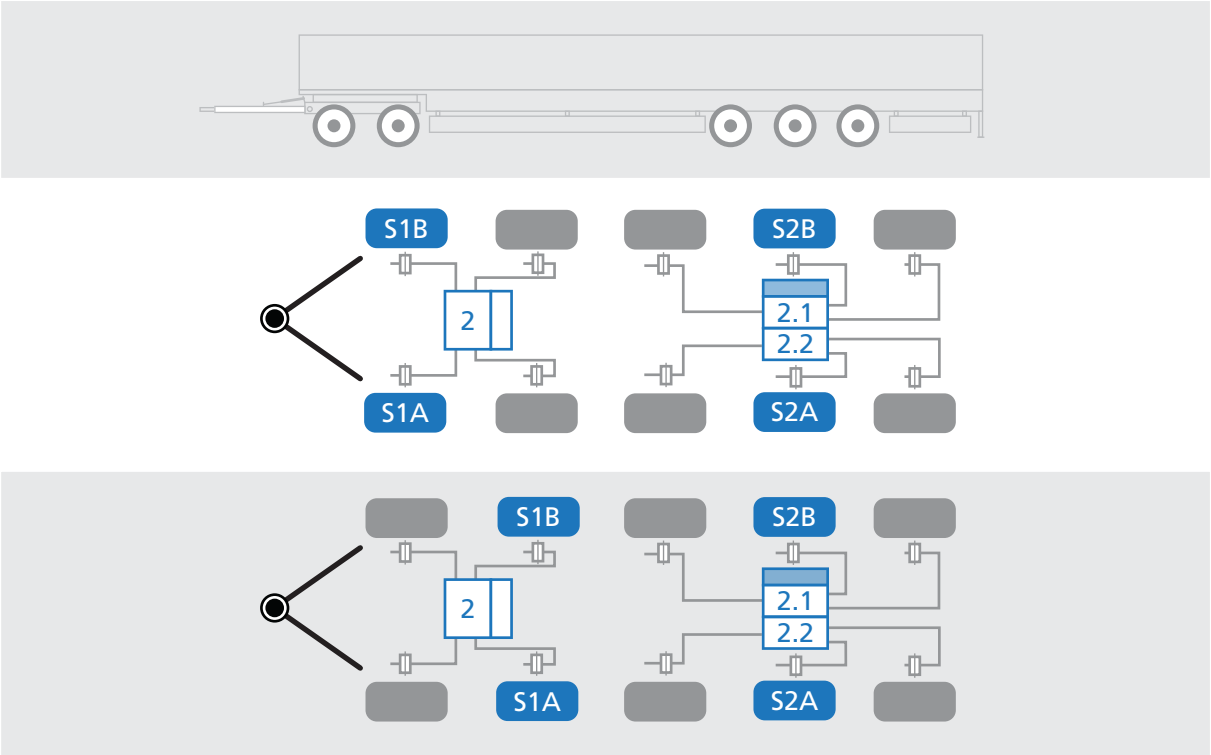

Notes (applicable to all above diagrams):

- N1 Master ECU is mounted to EPRV's 21/22. All sensors must be connected to this Master ECU
- N2 Directly controlled wheels connected pneumatically to EPRV's 21/22 cannot be lifted
- N3 Slave ECU is mounted to EPRV 2 and is controlled by Master ECU. Slave ECU / EPRV 2 is shown facing rear but can also be installed facing forward, left or right, as EPRV 2 is always select low control
- N4 Sensed wheels connected pneumatically to EPRV 2 can be lifted but corresponding indirectly controlled wheels must be lifted in parallel
- N5 Any axle without directly controlled wheels may be lifted
- N6 Any axle may be a steered axle

Key

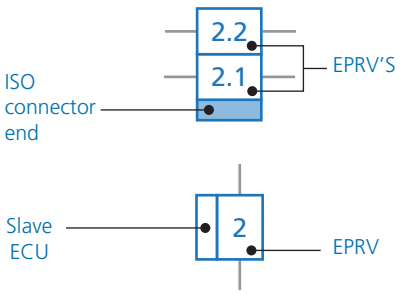

Full trailers

4S / 3M

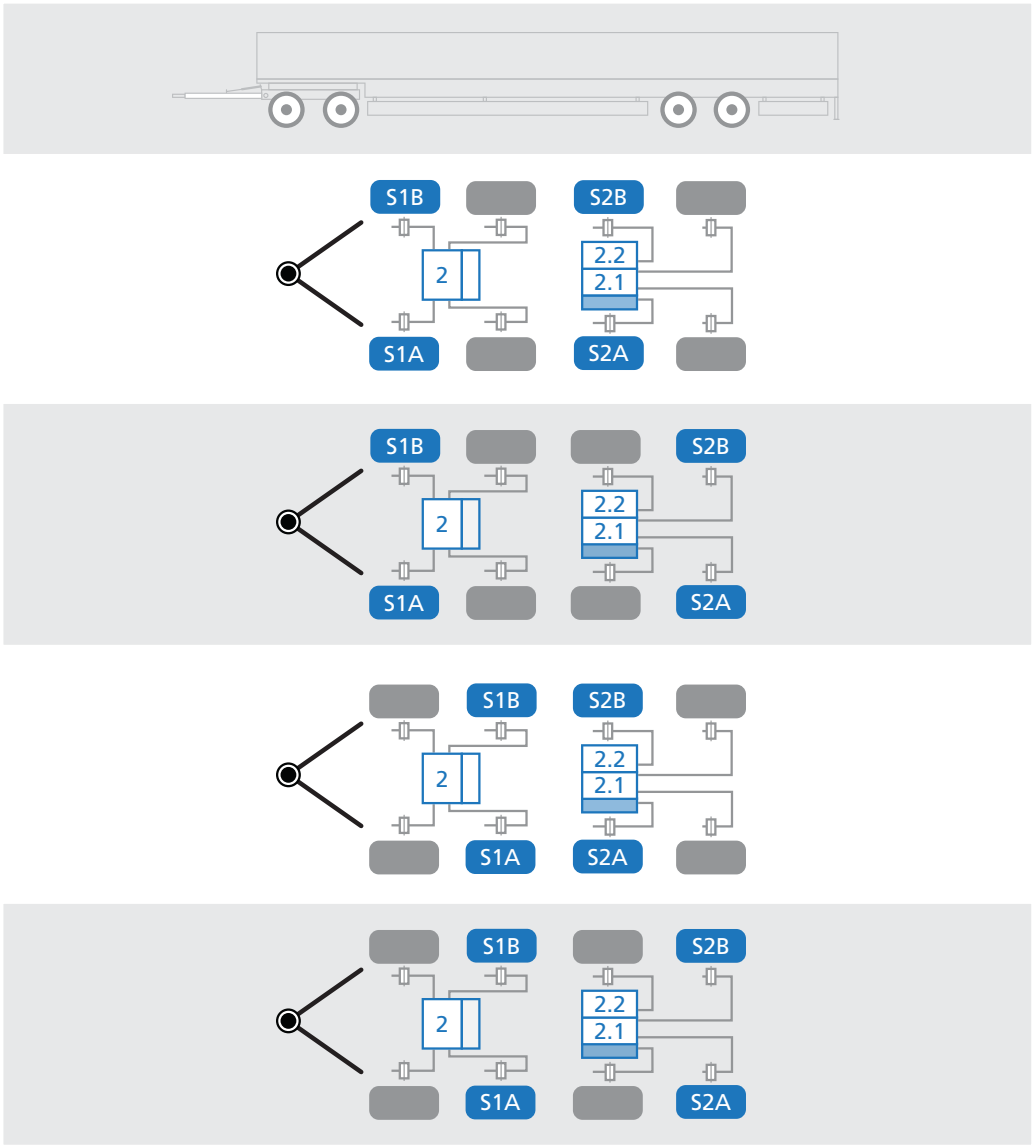

Notes (applicable to all above diagrams):

- N1 Master ECU is mounted to EPRV's 21/22. All sensors must be connected to this Master ECU
- N2 Directly controlled wheels connected pneumatically to EPRV's 21/22 cannot be lifted
- N3 Slave ECU is mounted to EPRV 2 and is controlled by Master ECU. Slave ECU / EPRV 2 is shown facing rear but can also be installed facing forward, left or right, as EPRV 2 is always select low control
- N4 Any axle without directly controlled wheels may be lifted
- N5 Any axle may be a steered axle

Key

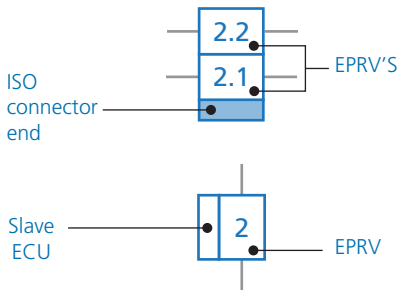

Full trailers

4S / 3M

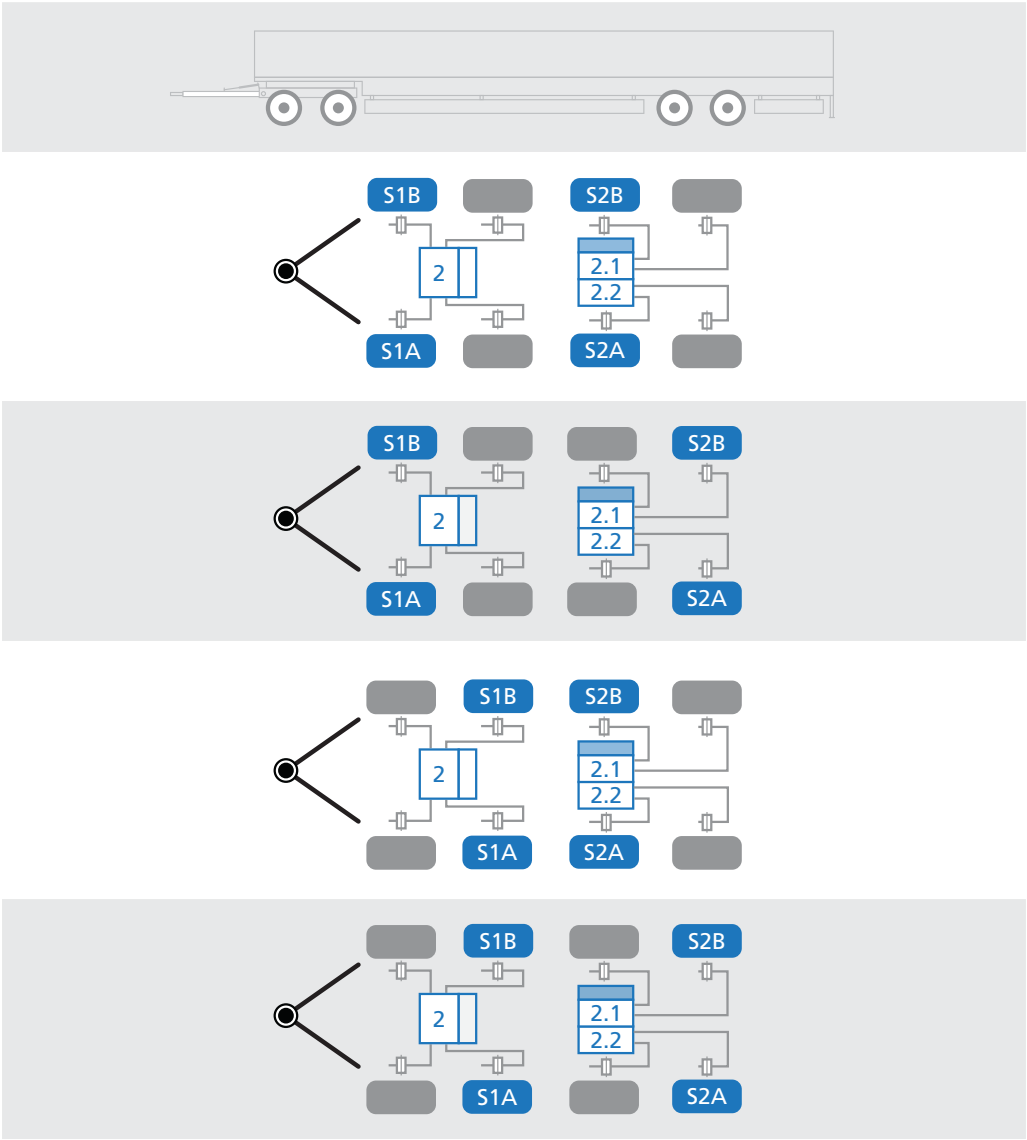

Notes (applicable to all above diagrams):

- N1 Master ECU is mounted to EPRV's 21/22. All sensors must be connected to this Master ECU
- N2 Directly controlled wheels connected pneumatically to EPRV's 21/22 cannot be lifted
- N3 Slave ECU is mounted to EPRV 2 and is controlled by Master ECU. Slave ECU / EPRV 2 is shown facing rear but can also be installed facing forward, left or right, as EPRV 2 is always select low control
- N4 Any axle without directly controlled wheels may be lifted
- N5 Any axle may be a steered axle

Key

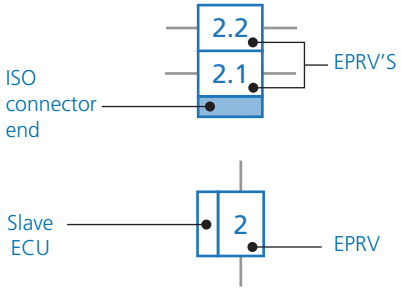

Inloader semi trailers

2S/2M + 1 Standard Pneumatic Relay Valves each side

Integrated Side By Side (SxS) with 1 standard pneumatic relay valve on each side controlled by the EB+ EPRV's.

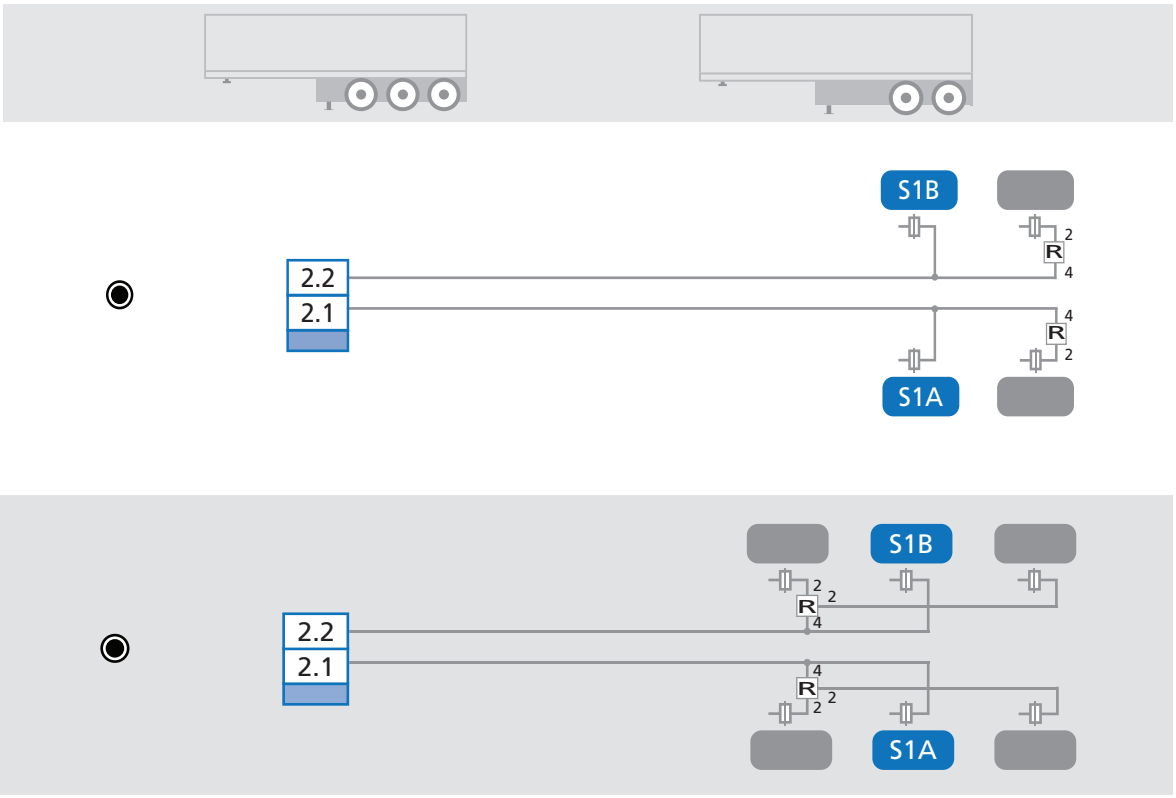

Any axle without directly controlled wheels may be lifted.
Any axle may be a command steered axle.
Pipe dimensions:-
EB+ delivery pipe to brake actuators of directly controlled axle maximum length 10m of 12 x 1.5mm pipe.
EB+ reservoir minimum diameter 15 x 2mm x 2 pipes maximum length 3m.
Conventional relay delivery port 2 to each axle maximum length 4m of 12 x 1.5mm pipe.
Conventional relay reservoir pipe minimum diameter 15 x 2mm and maximum length 4m.

Key

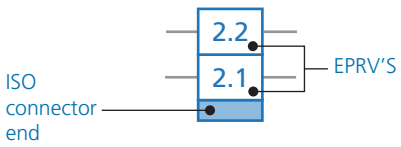

Inloader semi trailers

2S/2M + 1 standard pneumatic relay valves each side

Integrated Side By Side (SxS) with 1 standard pneumatic relay valve on each side controlled by the EB+ EPRV's.

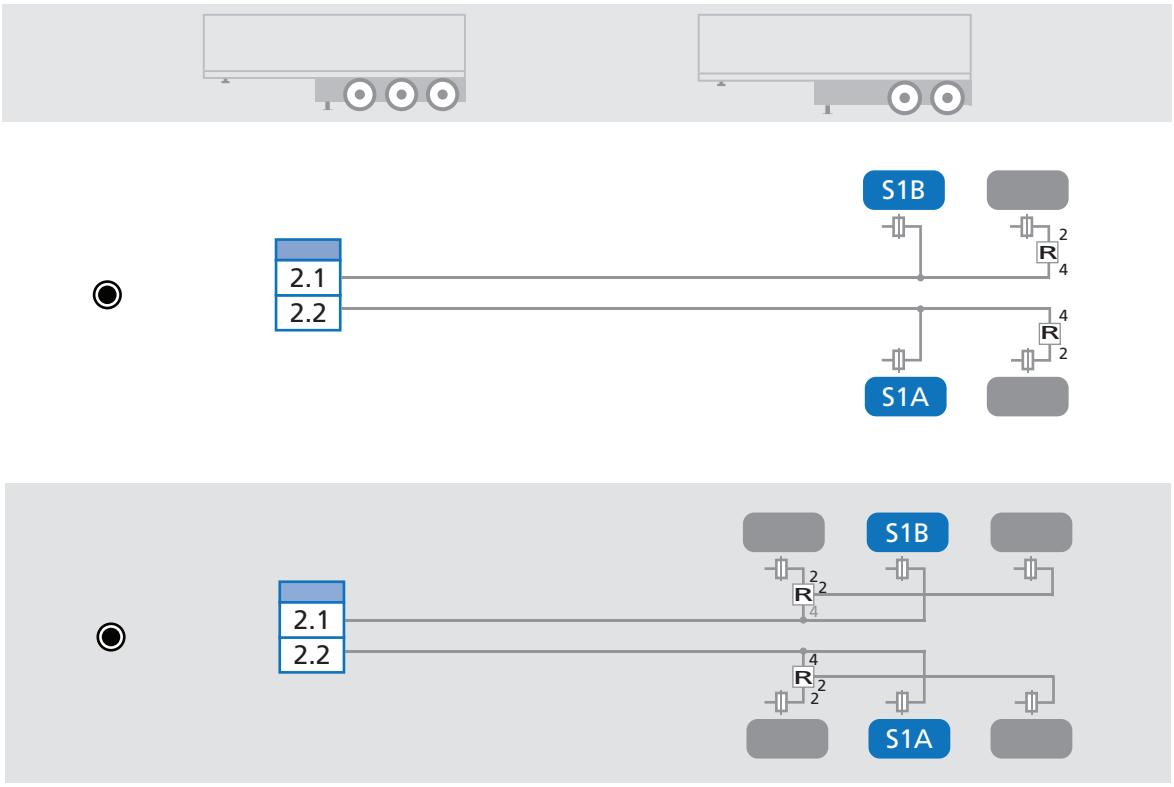

Any axle without directly controlled wheels may be lifted.
Any axle may be a command steered axle.
Pipe dimensions:-
EB+ delivery pipe to brake actuators of directly controlled axle maximum length 10m of 12 x 1.5mm pipe.
EB+ reservoir minimum diameter 15 x 2mm x 2 pipes maximum length 3m.
Conventional relay delivery port 2 to each axle maximum length 4m of 12 x 1.5mm pipe.
Conventional relay reservoir pipe minimum diameter 15 x 2mm and maximum length 4m.

Key

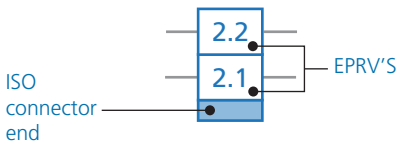

Inloader semi trailers

4S/2M + 1 standard pneumatic relay valves each side

Integrated Side By Side (SxS) with 2 standard pneumatic relay valves on each side controlled by the EB+ EPRV's.

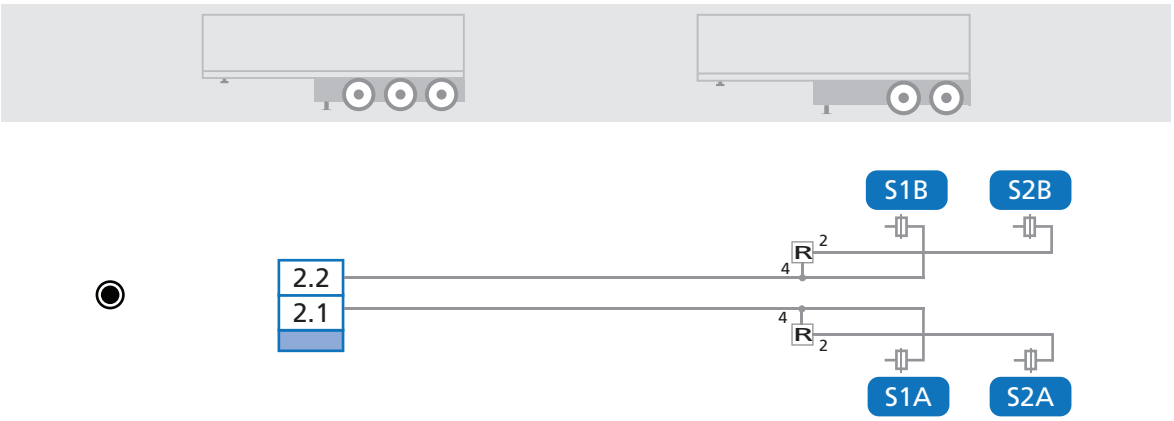

Any axle without directly controlled wheels may be lifted.
Any axle may be a command steered axle.
Pipe dimensions:-
EB+ delivery pipe to brake actuators of directly controlled axle maximum length 10m of 12 x 1.5mm pipe.
EB+ reservoir minimum diameter 15 x 2mm x 2 pipes maximum length 3m.
Conventional relay delivery port 2 to each axle maximum length 4m of 12 x 1.5mm pipe.
Conventional relay reservoir pipe minimum diameter 15 x 2mm and maximum length 4m.

Key

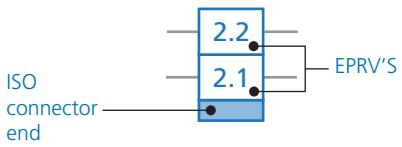

Inloader semi trailers

4S/2M + 1 standard pneumatic relay valves each side

Integrated Side By Side (SxS) with 2 standard pneumatic relay valves on each side controlled by the EB+ EPRV's.

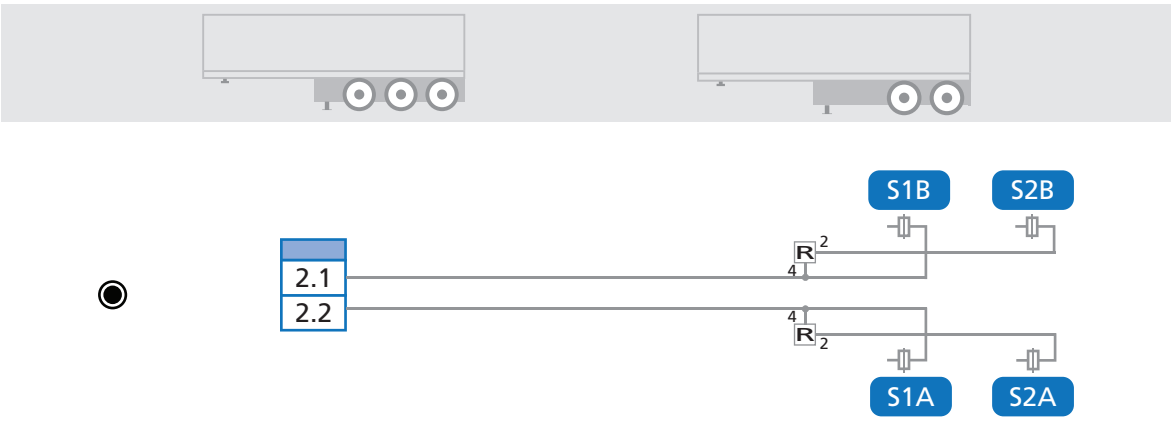

Any axle without directly controlled wheels may be lifted.
Any axle may be a command steered axle.
Pipe dimensions:-
EB+ delivery pipe to brake actuators of directly controlled axle maximum length 10m of 12 x 1.5mm pipe.
EB+ reservoir minimum diameter 15 x 2mm x 2 pipes maximum length 3m.
Conventional relay delivery port 2 to each axle maximum length 4m of 12 x 1.5mm pipe.
Conventional relay reservoir pipe minimum diameter 15 x 2mm and maximum length 4m.

Key

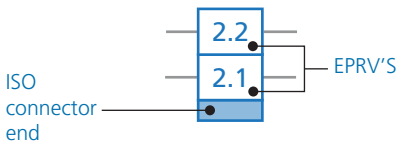

Chassis installation

Position of EB+ Gen3 assembly on Semi, Centre axle and Full Trailers

The following installation parameters are required for correct stability operation.

Roll angle : ± 3 ° (1:20)

Yaw angle : ± 5 °

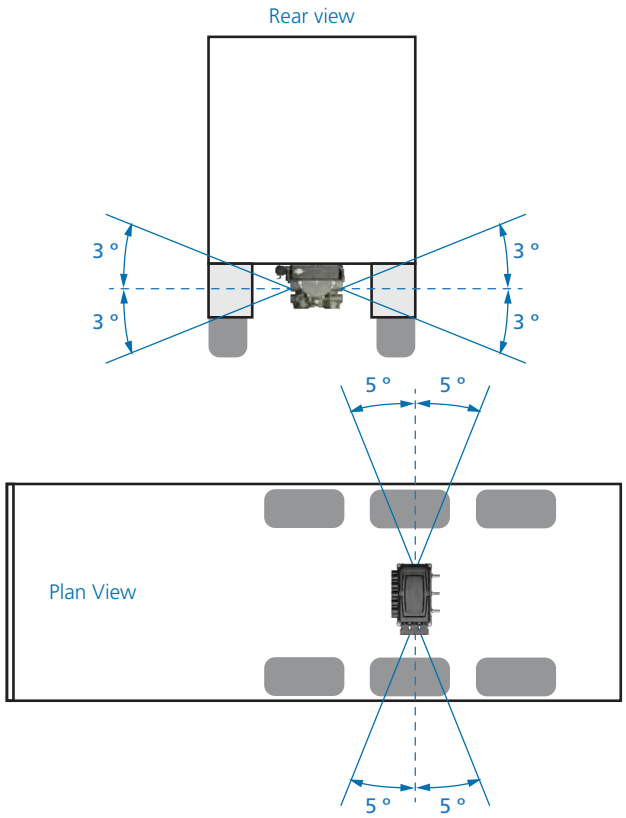

The EB+ Gen3 system is to be mounted within distance X & Y from the centre line of the rear axle group / bogie (includes lift axles).

Trailer	X	Y
Semi	1.5 m	1.5 m
Centre-axle	1.5 m	1.5 m
Full	3.0 m	1.5 m

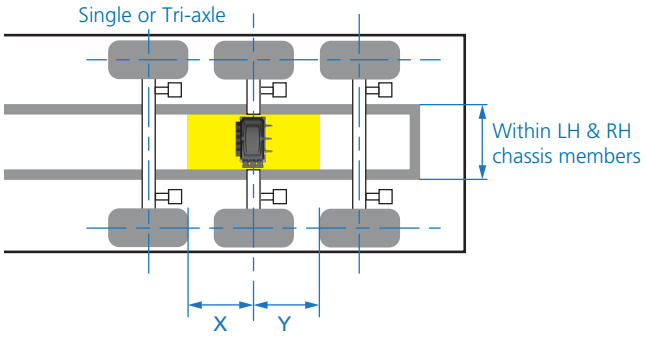

Haldex recommended position for maximum stability performance. Fitment of EB+ Gen3 outside of this area may affect the stability performance.

The EB+ Gen3 assembly to be within the main left hand (LH) and right hand (RH) chassis members of the vehicle.

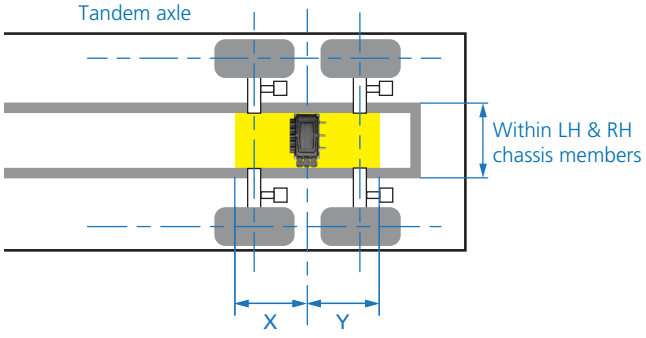

For any other applications please refer to Haldex Technical Services.

Pitch angle: assembly must be mounted vertically.

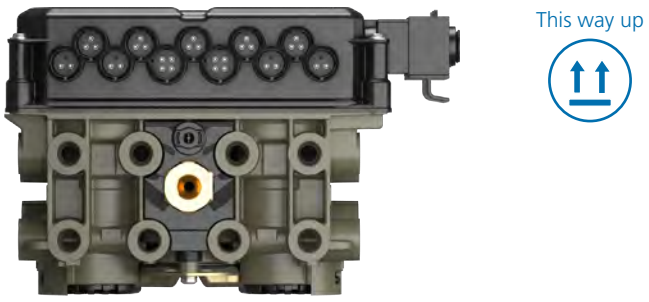

The assembly should not be in direct spray or splash water area and should be protected against high pressure cleaning.

Position of EB+ Gen3 assembly on Inloader Trailers

Refer to the trailer Inloader system configuration diagrams for individual installations using 2 or 4 relay valves.

The following installation parameters are required for correct stability operation.

Roll angle : ± 3 ° (1:20)

Yaw angle : ± 5 °

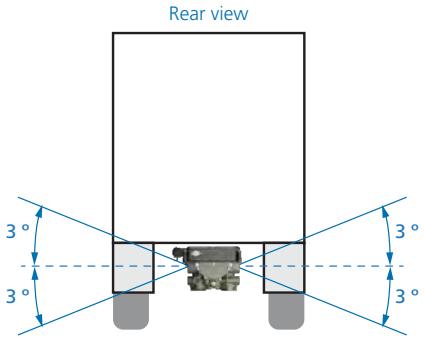

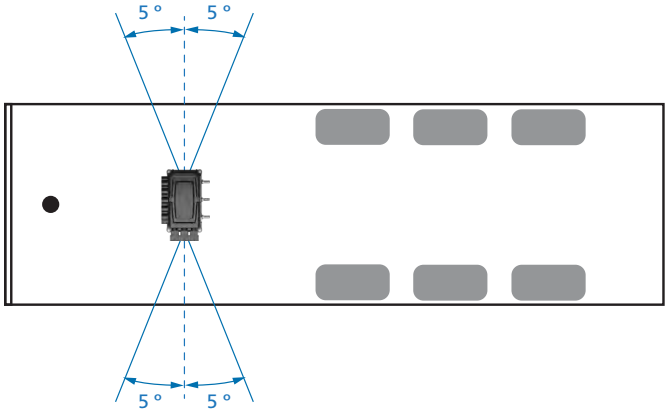

The EB+ Gen3 system is to be mounted within the distance between the trailer King Pin and the 1st axle, as shown by the shaded area.

Haldex recommended position for maximum stability performance. Fitment of EB+ Gen3 outside of this area may affect the stability performance.

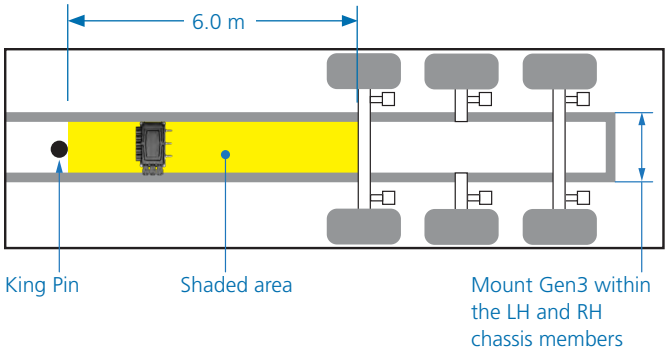

The EB+ Gen3 assembly to be within the main left hand (LH) and right hand (RH) chassis members of the vehicle.

For any other applications please refer to Haldex Technical Services.

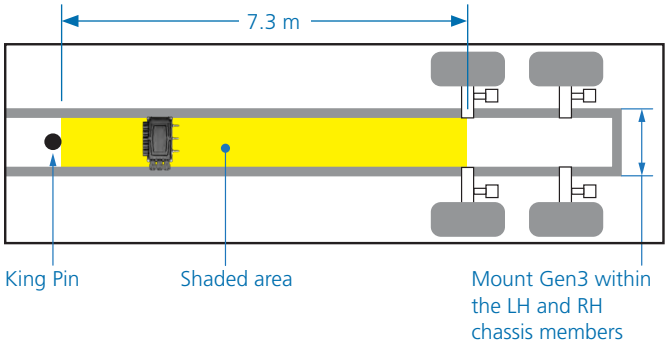

Pitch angle: assembly must be mounted vertically.

The assembly should not be in direct spray or splash water area and should be protected against high pressure cleaning.

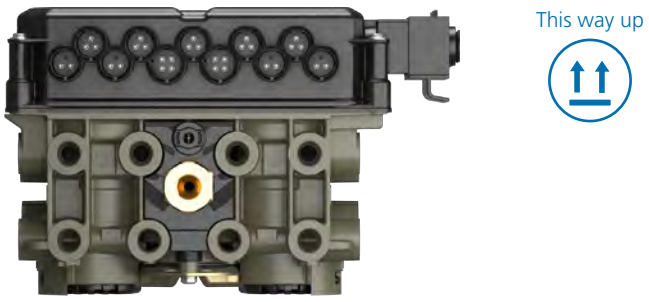

For optimum performance the valve should be mounted centrally to the brake chambers thus giving the shortest delivery pipe lengths.
The pipe length between the air reservoir and the valve ports 1 (x2) should be as short as possible.

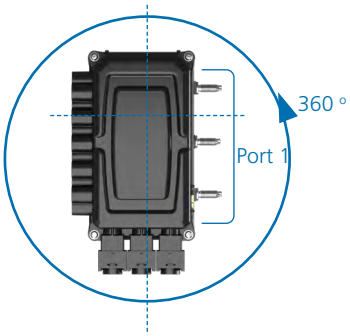

Mount modulator valves centrally to the brake chambers.

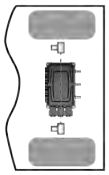

Single axle

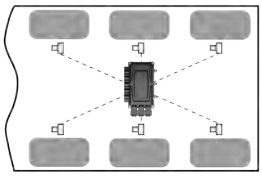

Tri-axle

If mounting to stainless steel, then a suitable membrane must be used.

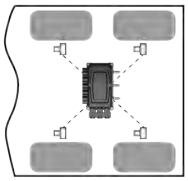

Tandem axle

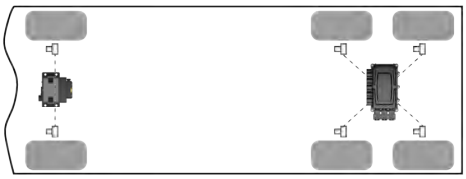

Full trailer

Additional bracket design to be as rigid as possible.
The mounting fixing must provide an electrical connection between ECU / modulator bracket and vehicle chassis.
Mounting bracket flatness to be not more than 0.5 mm deviation from its true plane (i.e. the surface must lie between two parallel planes 0.5 mm apart).

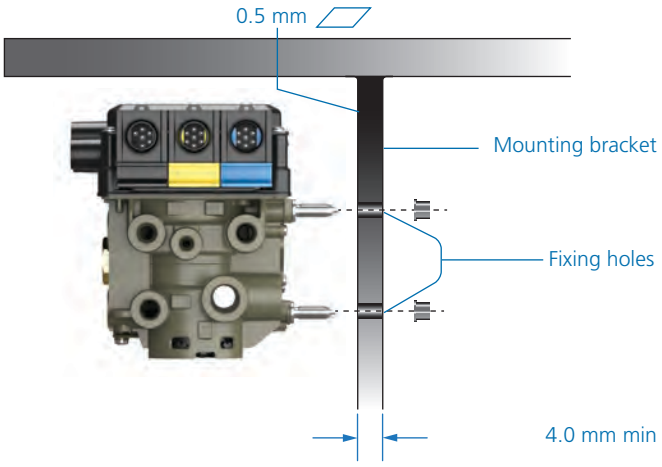

Position assembly as high as possible in the chassis to provide as much protection to the assembly from direct spray and other road debris and to achieve an acceptable hose routing.

Use noncorrosive 10 mm nuts (10.9 grade material), torque to 55-70 Nm.

The fastener to be protected from corrosion to give 200 hours salt spray resistance.

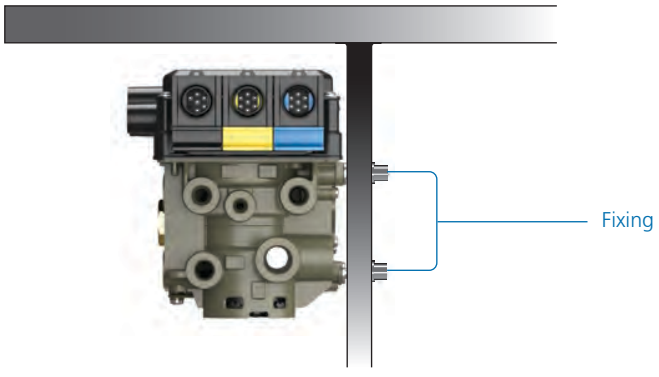

Position assembly as high as possible in the chassis to provide as much protection to the assembly from direct spray and other road debris and to achieve an acceptable hose routing.

Pitch angle: assembly must be mounted vertically.

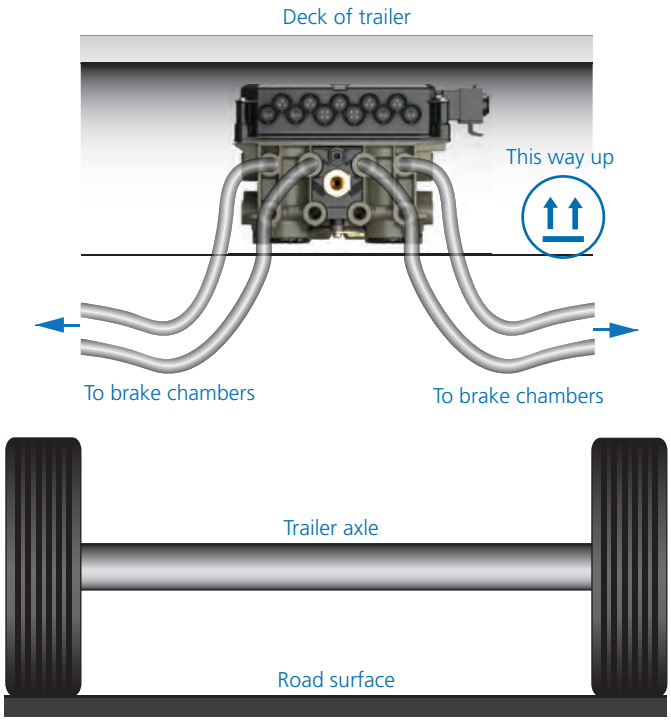

Care should be taken to provide reasonable access to the ECU / valve for replacement cables.

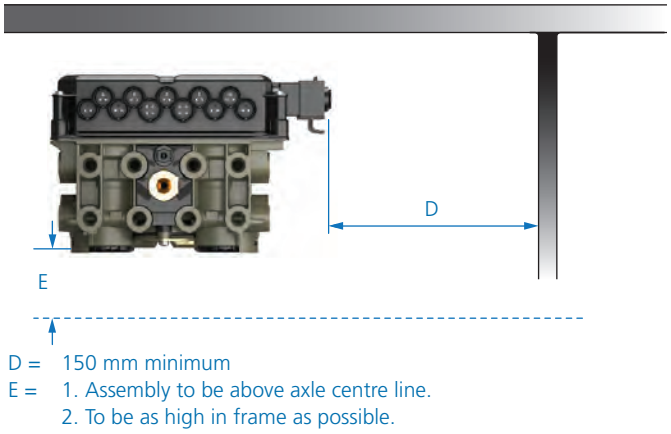

D = 150 mm minimum
E = 1. Assembly to be above axle centre line.
2. To be as high in frame as possible.

Check continuity between ECU / EPRV bracket and vehicle.

Resistance (R) to be less than 5 ohms
0 < R < 5 ohms

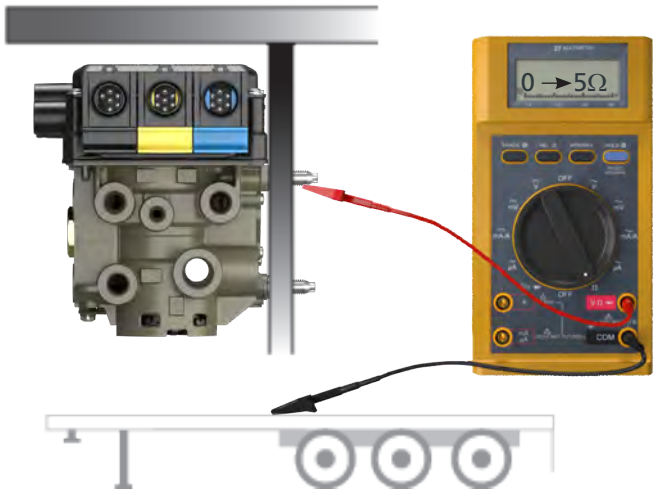

Sensor connection

Sensor extension cable socket must be pushed fully into sensor cable plug till they clip into place to prevent falling out with axle vibration.

Haldex recommend that all electrical components are greased prior to assembly using the appropriate electrical grease.

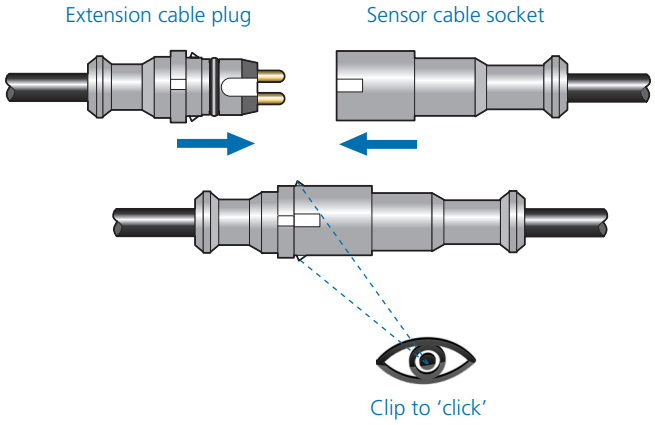

Where possible use a clip and bracket to secure sensor cable connection.
The female connector of the sensor cable should always be horizontal or pointing downward to reduce the possibility of water ingress.

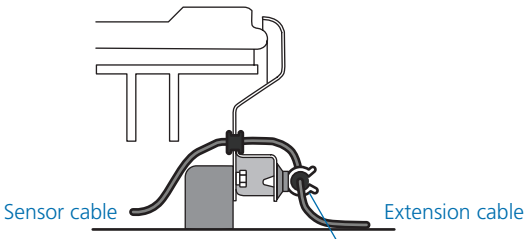

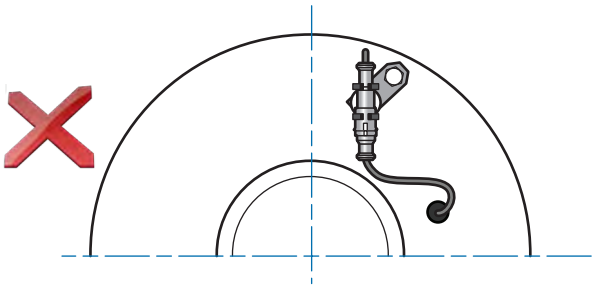

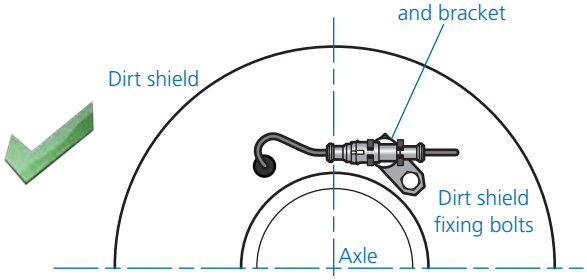

Alternatively: sensor cable connection to be positioned on axle or between axle 'U' bolts and supported with cable ties with 50 mm of each end.

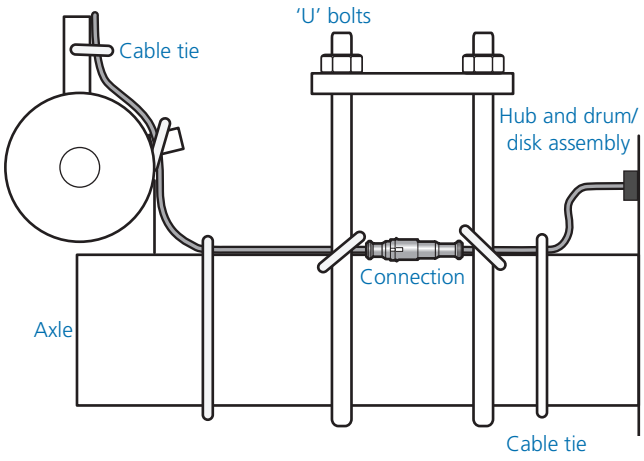

Sensor / COLAS®/ ILAS®-E connection

Sensor cable route should follow the centre line or outer radius of pipe or hose.

Tie wraps not to be over tightened because on brake application rubber hose expands, i.e. tie could damage the hose and sensor cable.

Do not run sensors leads in spiral wrapping on hoses.

Power leads should be secured down the chassis rail in trunking or to piping and should be secured with 300 mm maximum intervals.

All cables should run 'up to' ECU connections.

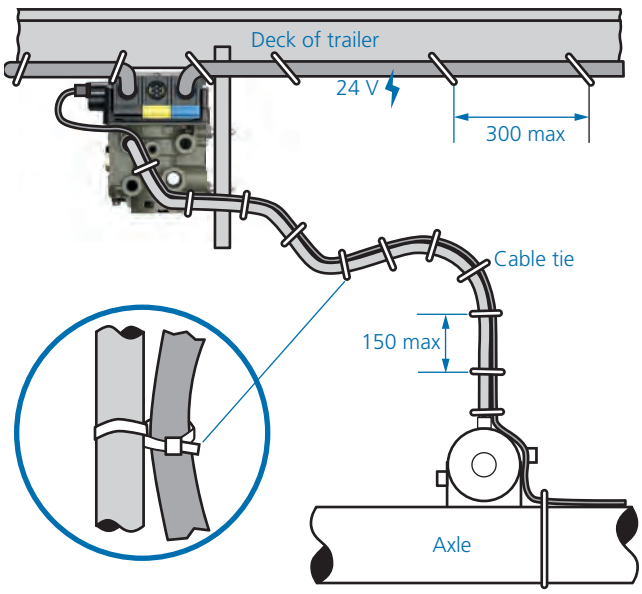

The route of all of the cables from the connector should not start to bend so that the connectors are strained.

Allow distance of 120 mm (minimum) before bending of cable.

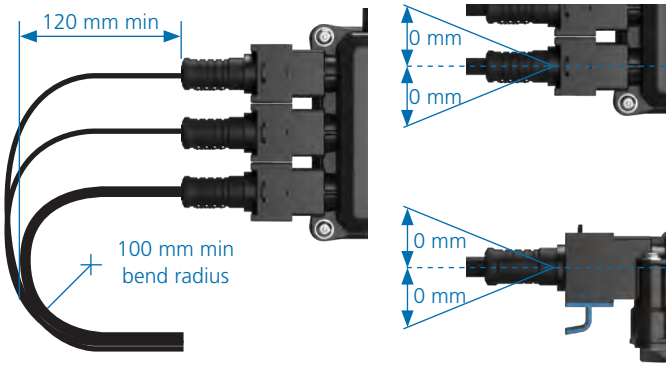

Cable should be secured down the chassis rail to existing piping and should be secured with 300 mm maximum intervals or inside trunking.

Position rubber gasket 'R' in position shown.

Note:
All cables should run 'up to' connector.

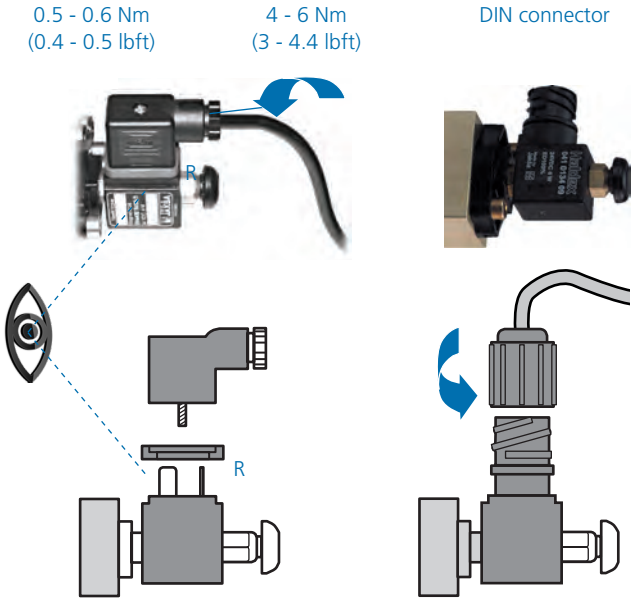

Excess cable

Excess cable must not be allowed to hang free, but must be attached to the chassis to prevent damage due to vibration and abrasion.

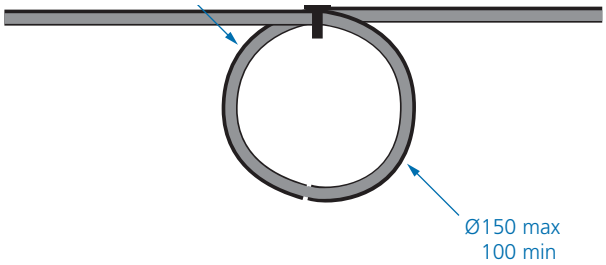

Cable lengths less than 1 m to be coiled into loops of 100 mm minimum and 150 mm maximum diameter.

Excess length which will not form a complete loop may be left to hang in partial loops having a cable bend radius of 50 mm minimum.

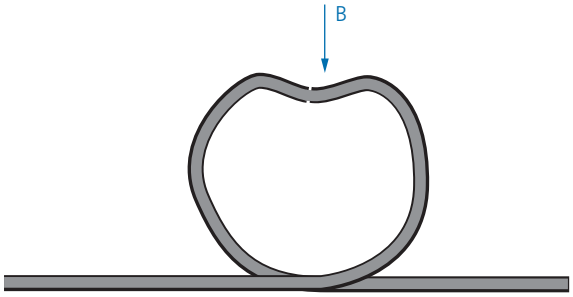

Cable lengths greater than 1 m to be coiled and then flattened in the centre 'B' to produce a 'dog bone' shape.
The resulting loops at the end must have a minimum bend radius of 50 mm. Cable ties are to be used to fix the cable in the flattened loop shape.

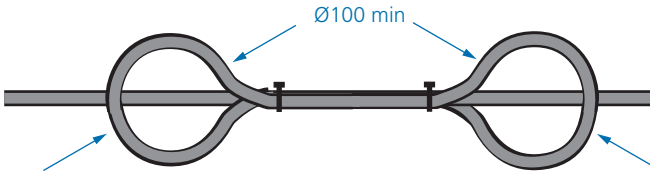

More than one looped cable must not be looped together.

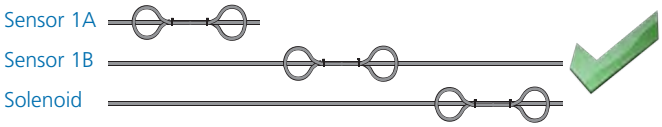

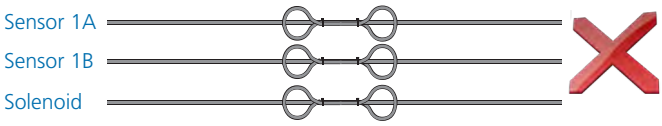

‘DIAG‘ side of vehicle connection

Clearance and mounting dimensions

Shaded area around hole to be flat and free from raised markings or surface imperfections which may prevent flush fitting of the connector.

Mount the diagnostic connector on the outside of the main chassis rail. The position must be in an accessible area but not in the direct spray of the wheels.

The connector must be mounted horizontally.

Tighten nut ‘R’ to a torque of 3-4 Nm (2-3 lbft).

ECU connection is as right.

Cable to run up to connector and secured to the chassis, or appropriate cable or pipe runs, with cable ties at 300 mm maximum intervals.

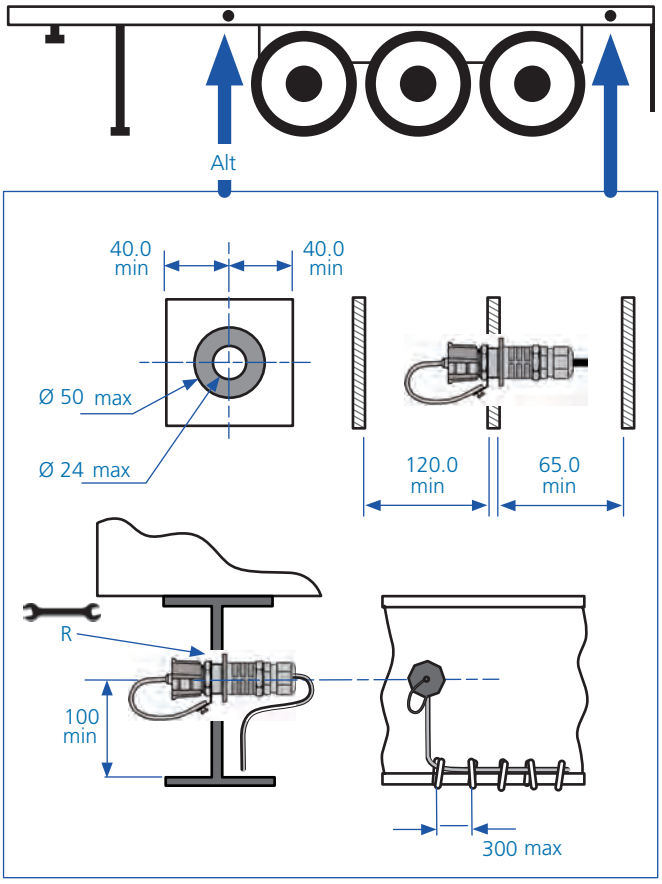

Diagnostic ‘DIAG’ - side of vehicle connection - option 3

Ensure that the cover is fitted and correctly ‘locked’ in place.

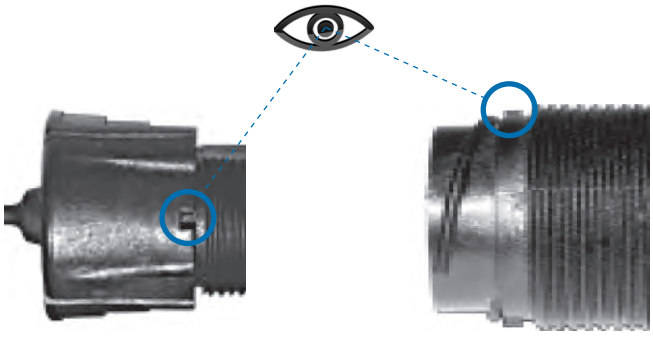

Note:
For Installation of Info Center refer to Instructions 006 300 000.

Piping recommendations

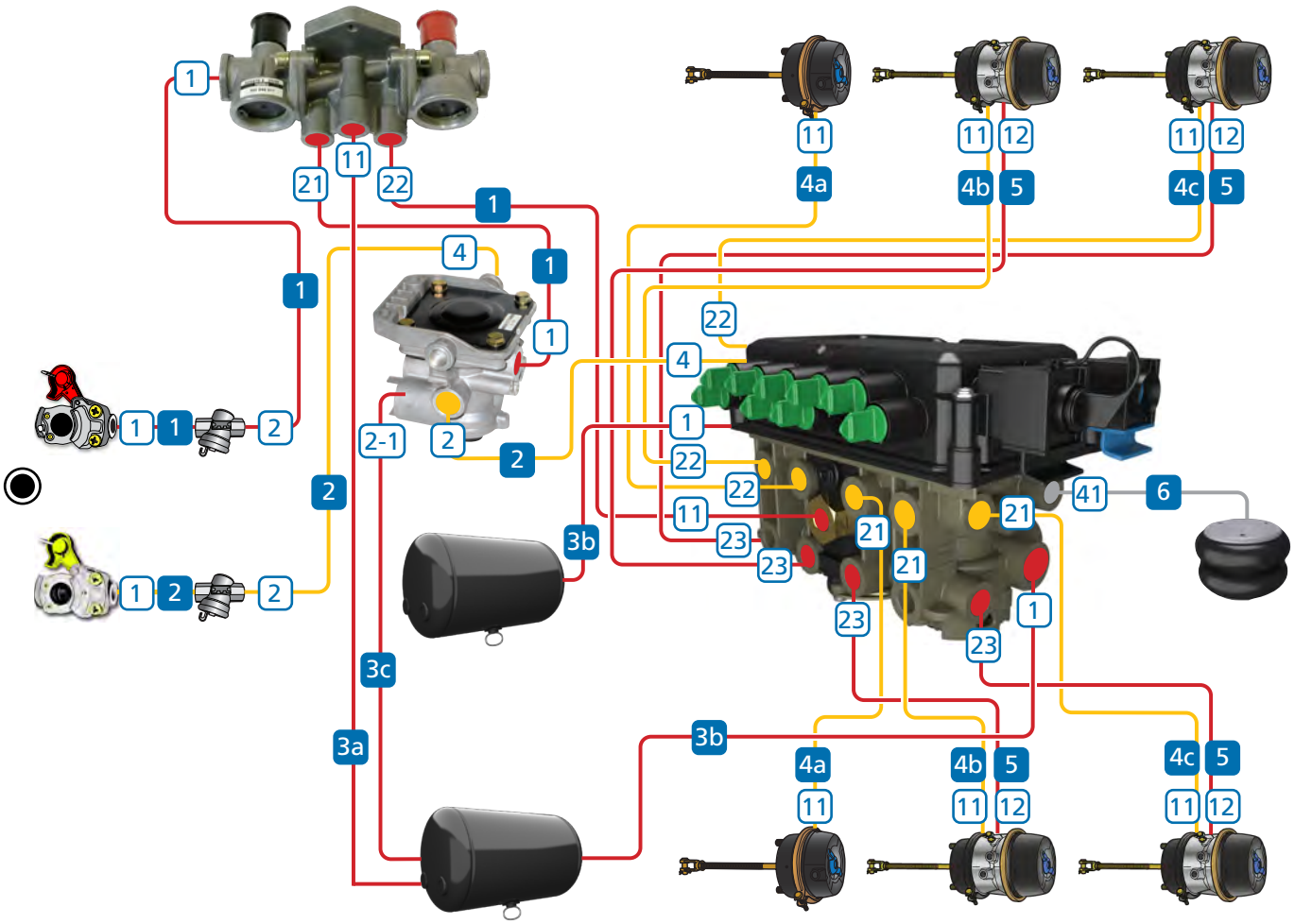

Note:
EB+ Gen3 should be supplied with clean / dry air.

Key

1 Port number

1 Components

Item	Description	Material	Size	Remark
1	Emergency pipe	Nylon	8 x 1, 10 x 1, 10 x 1.25, 12 x 1.5	
2	Service pipe	Nylon	8 x 1, 10 x 1, 10 x 1.25, 12 x 1.5	
3a	Reservoir pipe	Nylon	8 x 1, 10 x 1, 10 x 1.25, 12 x 1.5	
3b	Reservoir pipe	Nylon	15 x 1.5 15 x 1.5 x 2 off (preferred) 18 x 2	Short as possible 1.0m max. Short as possible 4.0m max.
3c	Reservoir pipe	Nylon	12 x 1.5	
4a 4b 4c	Brake delivery pipe	Nylon or Rubber hose	12 x 1.5 or I.D. 11.0, I.D. 13.0	4a, 4b and 4c to be as short as possible.
5	Emergency pipe	Nylon Rubber hose	8 x 1, 10 x 1.25, 12 x 1.5 I.D 11.0, I.D. 13.0	
6	Suspension pipe	Nylon	As per suspension manufacturers recommendations.	

Piping information

- Actual pipe sizes need to be optimized for individual trailer response time requirements
- All pipe and rubber hose to comply to recognized international standards
- Nylon pipe to DIN 73378, rubber hose to SAE 1402
- The referenced sizes are defined as guide lines only
- For optimum performance all pipe lengths should be as short as possible

Pipe fittings

Avoid elbows as much as possible. If essential, use swept type elbow.

Inside diameter of fitting should be the same as the inside pipe diameter it is serving.

On metric (parallel thread) pipe fitting a backing washer and 'O' ring should be used.

The use of tape (PTFE) must not be used.

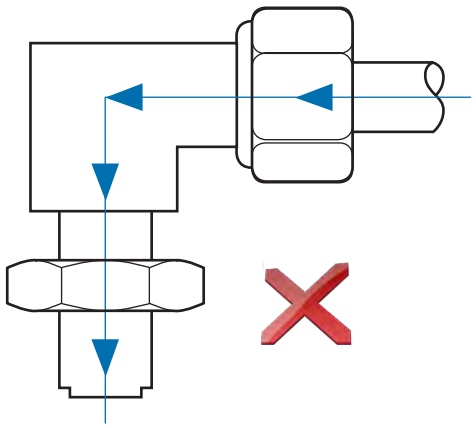

Note:
No pipe sealant or tape (PTFE) must be used during the installation of EB+ Gen3. No warranty claims will be accepted on pipe sealant or tape induced faults.

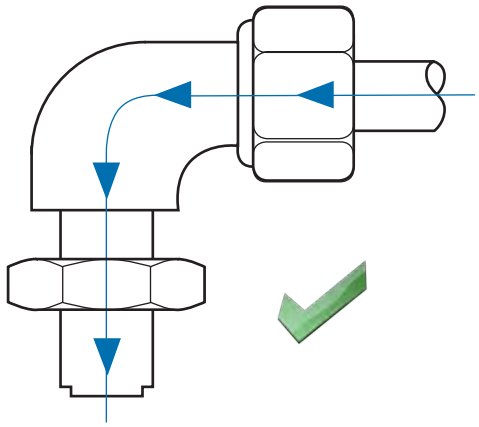

Piping layout – 2M brake

2M, side by side with TrCM+

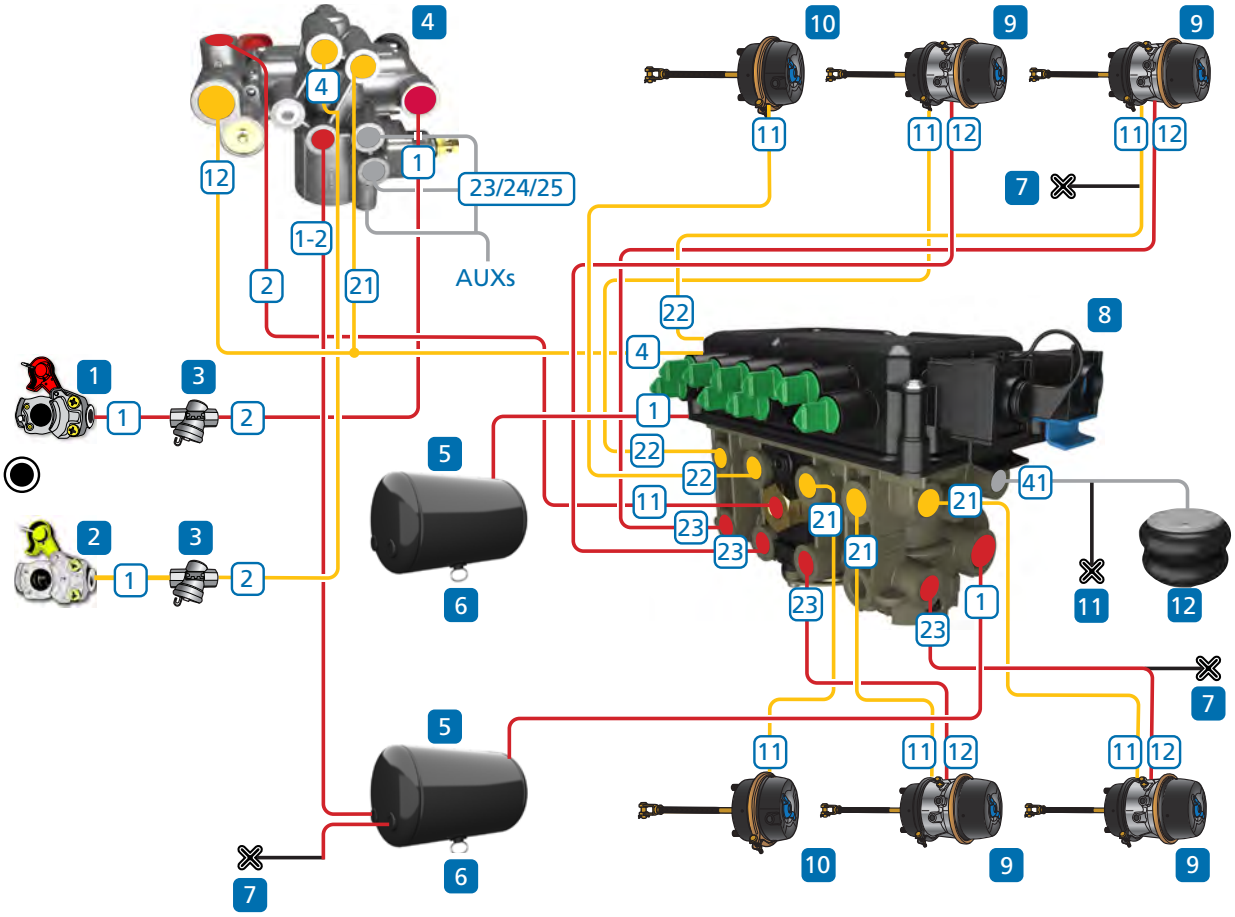

Note:
EB+ Gen3 should be supplied with clean / dry air.

Key

1 Port number

1 Components

Item	Description	Notes
1	Emergency coupling	Combined coupling & filter available
2	Service coupling	Combined coupling & filter available
3	Pipe filter	
4	TrCM+	
5	Air reservoir - brake	
6	Drain valve	
7	Test point	
8	EB+ Gen3 assembly	
9	Spring brake chamber	
10	Single diaphragm brake chamber	
11	Test point simulator	
12	Suspension bellows	

2M, side by side, with TEM®

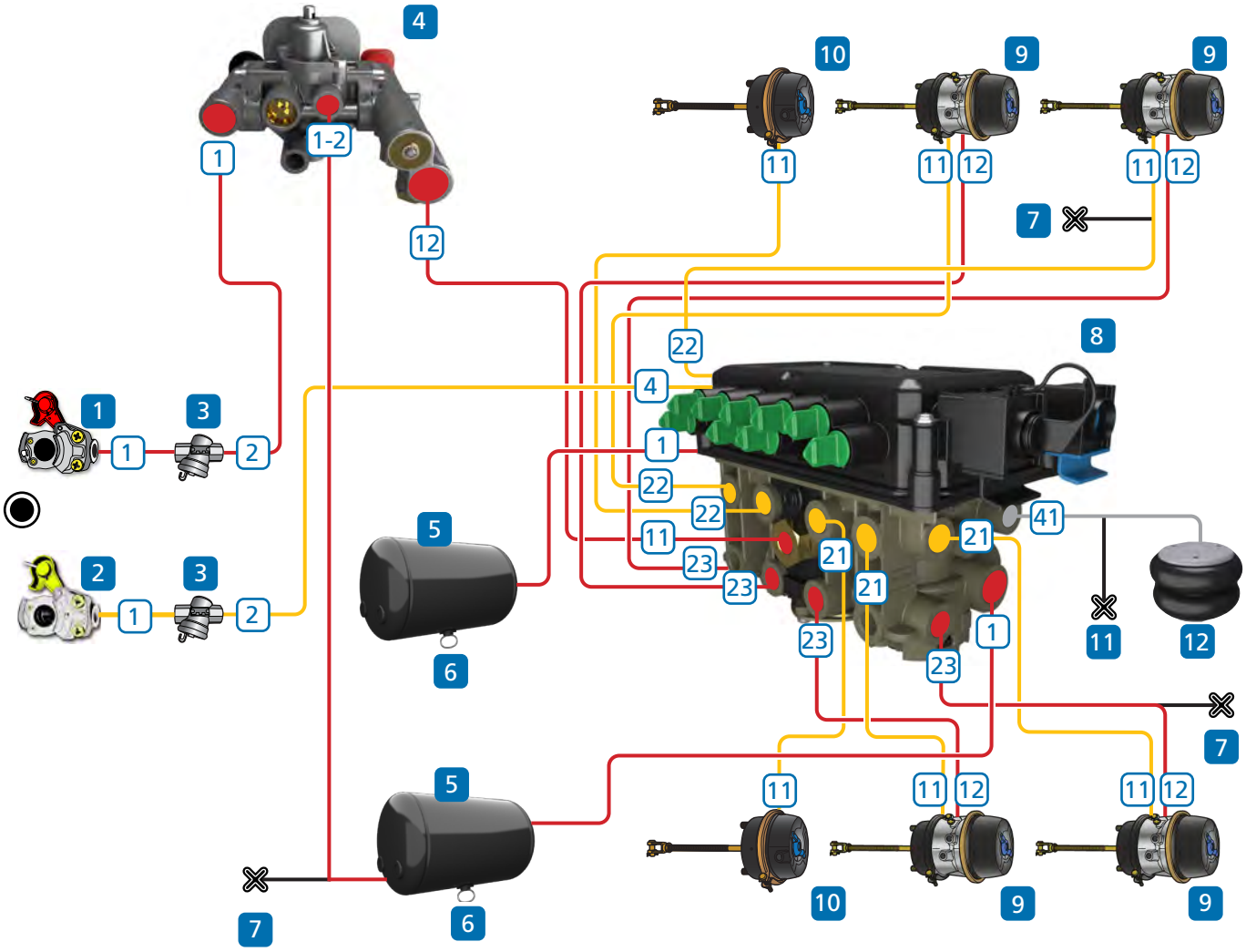

Note:
EB+ Gen3 should be supplied with clean / dry air.

Key

1 Port number

1 Components

Item	Description	Notes
1	Emergency coupling	Combined coupling & filter available
2	Service coupling	Combined coupling & filter available
3	Pipe filter	
4	TEM®	
5	Air reservoir - brake	
6	Drain valve	
7	Test point	
8	EB+ Gen3 assembly	
9	Spring brake chamber	
10	Single diaphragm brake chamber	
11	Test point simulator	
12	Suspension bellows	

2M, side by side, with combined park & shunt valve

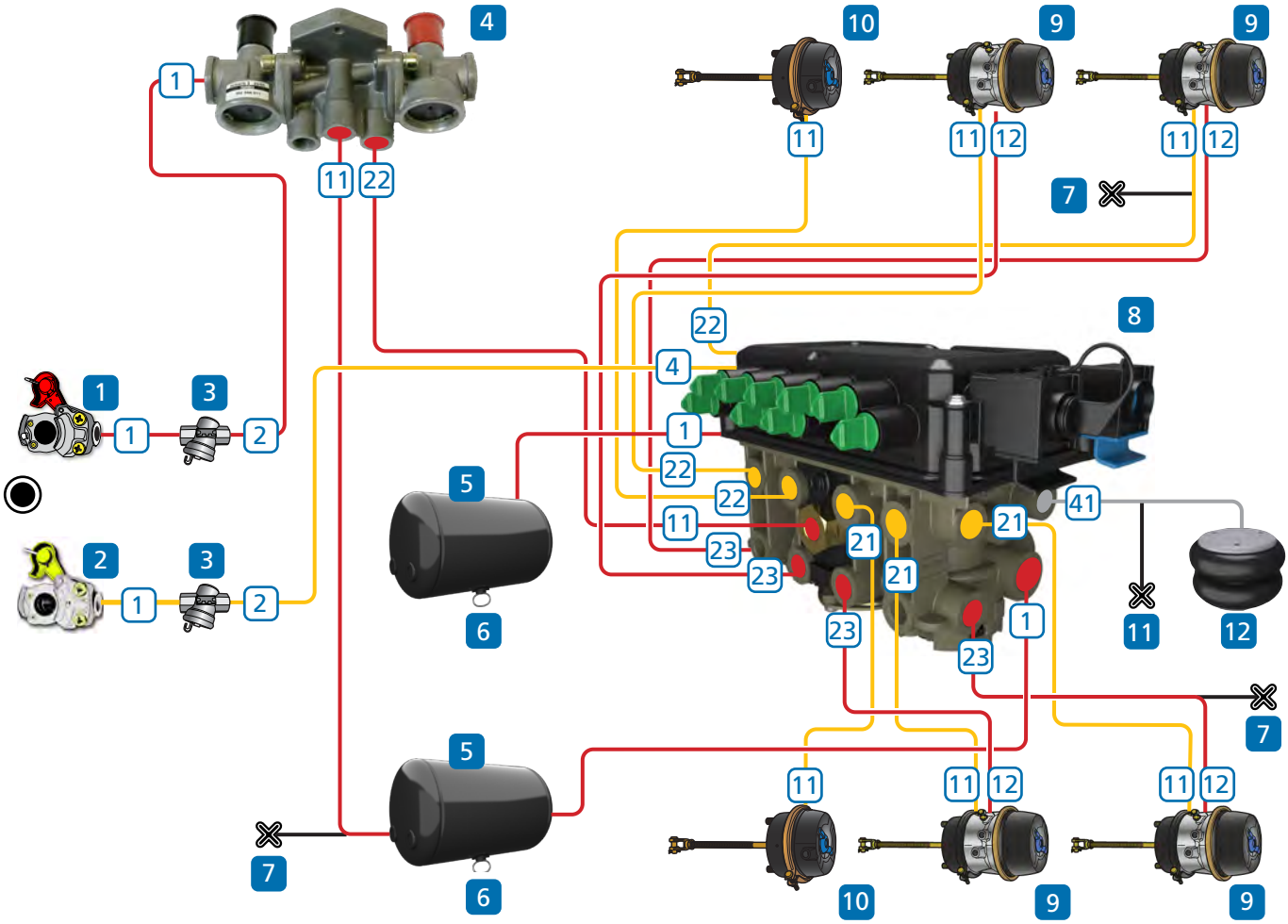

Note:
EB+ Gen3 should be supplied with clean / dry air.

Key

1 Port number

1 Components

Item	Description	Notes
1	Emergency coupling	Combined coupling & filter available
2	Service coupling	Combined coupling & filter available
3	Pipe filter	
4	Combined park & shunt valve	352 046 001
5	Air reservoir - brake	
6	Drain valve	
7	Test point	
8	EB+ Gen3 assembly	
9	Spring brake chamber	
10	Single diaphragm brake chamber	
11	Test point simulator	
12	Suspension bellows	

2M, side by side, REV with combined park & shunt valve

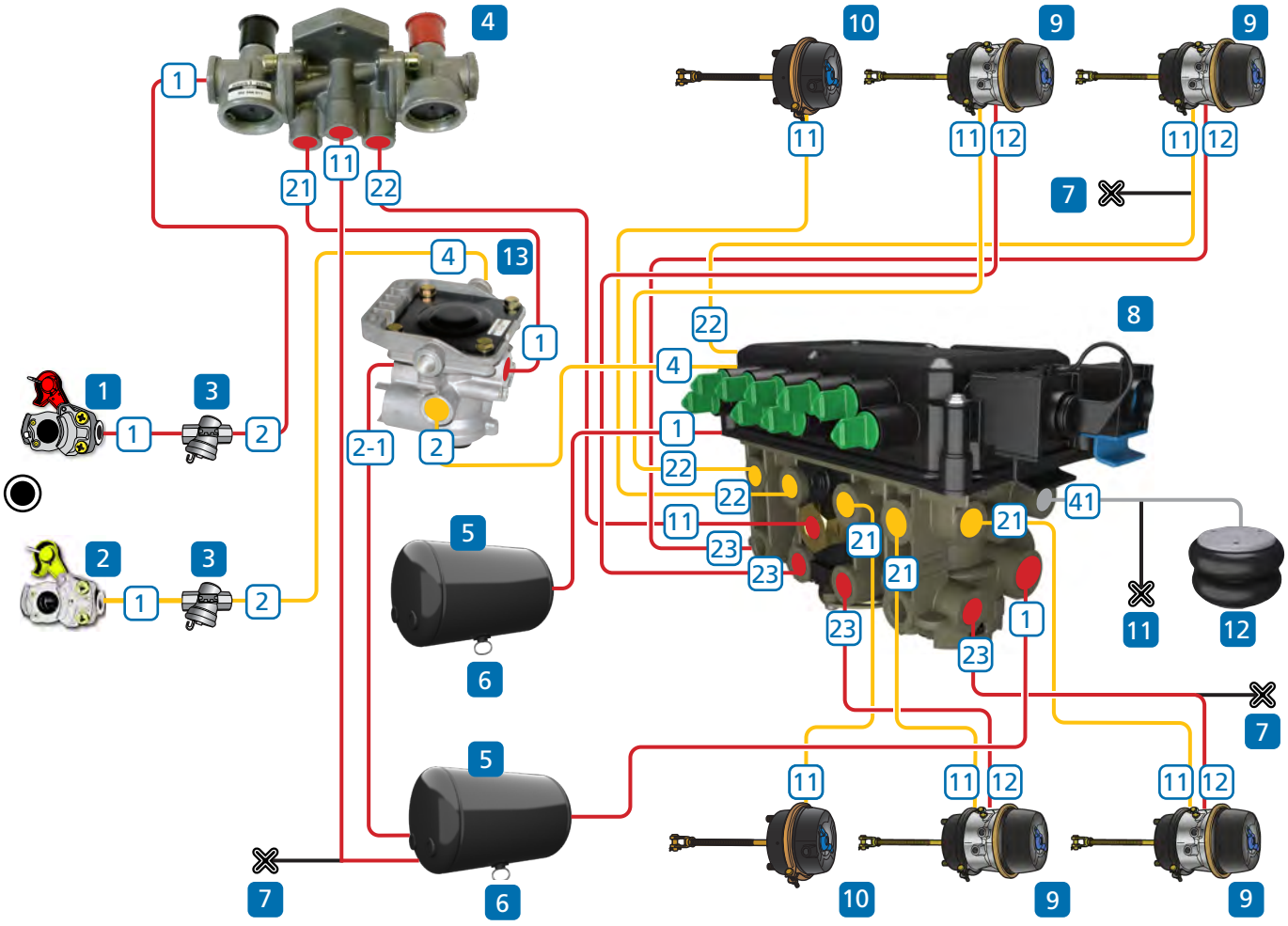

Note:
EB+ Gen3 should be supplied with clean / dry air.

Key

1 Port number

1 Components

Item	Description	Notes
1	Emergency coupling	Combined coupling & filter available
2	Service coupling	Combined coupling & filter available
3	Pipe filter	
4	Combined park & shunt valve	352 044 001
5	Air reservoir - brake	
6	Drain valve	
7	Test point	
8	EB+ Gen3 assembly	
9	Spring brake chamber	
10	Single diaphragm brake chamber	
11	Test point simulator	
12	Suspension bellows	

2M, axle by axle, REV and individual park & shunt valves

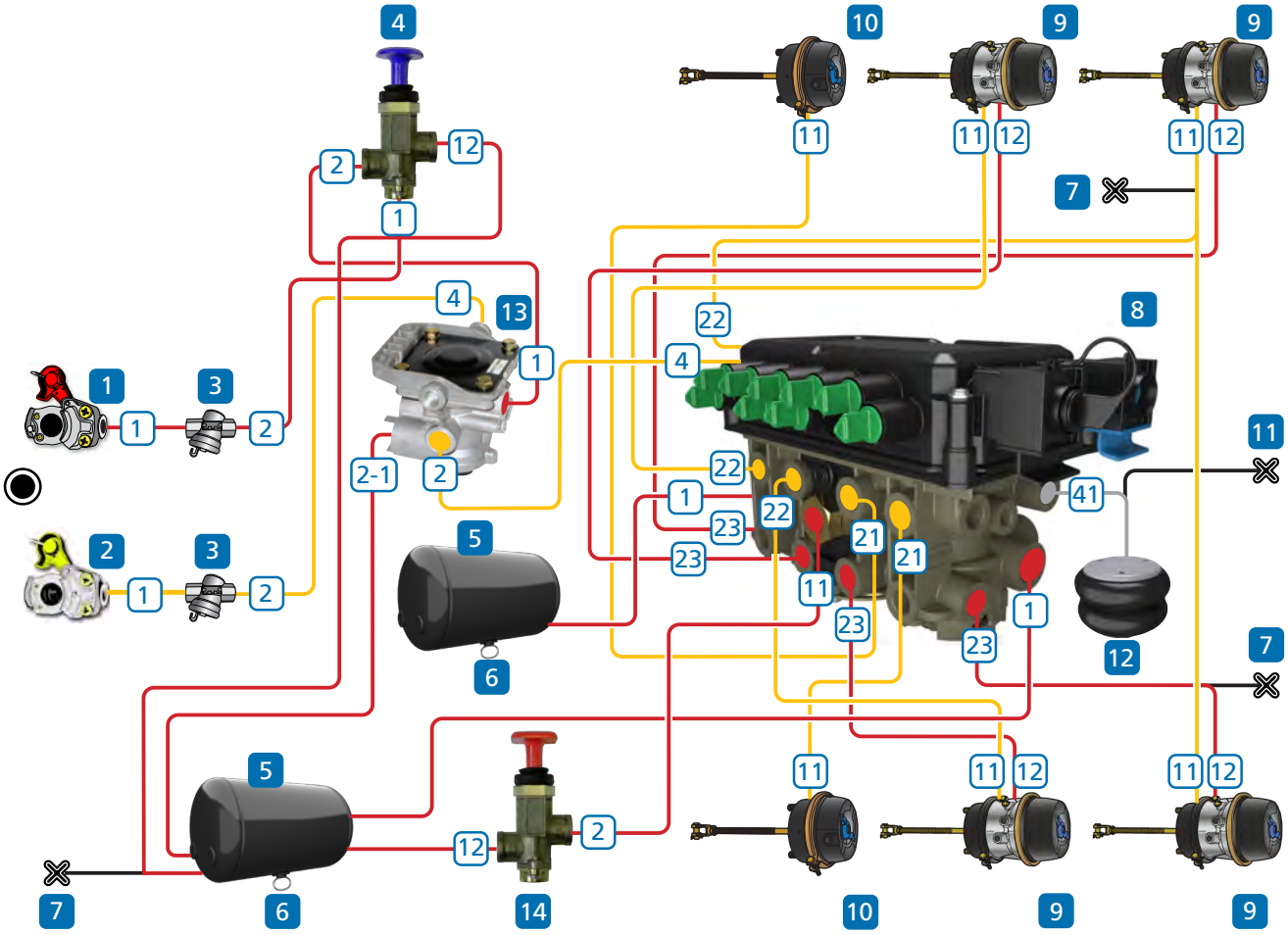

Note:
EB+ Gen3 should be supplied with clean / dry air.

Key

1 Port number

1 Components

Item	Description	Notes
1	Emergency coupling	Combined coupling & filter available
2	Service coupling	Combined coupling & filter available
3	Pipe filter	
4	Shunt valve	352 018 xxx
5	Air reservoir - brake	
6	Drain valve	
7	Test point	
8	EB+ Gen3 assembly	
9	Spring brake chamber	
10	Single diaphragm brake chamber	
11	Test point simulator	
12	Suspension bellows	
13	Relay Emergency Valve (REV)	
14	Park valve	352 019 xxx

Piping layout – 2M suspension

2M, levelling valve

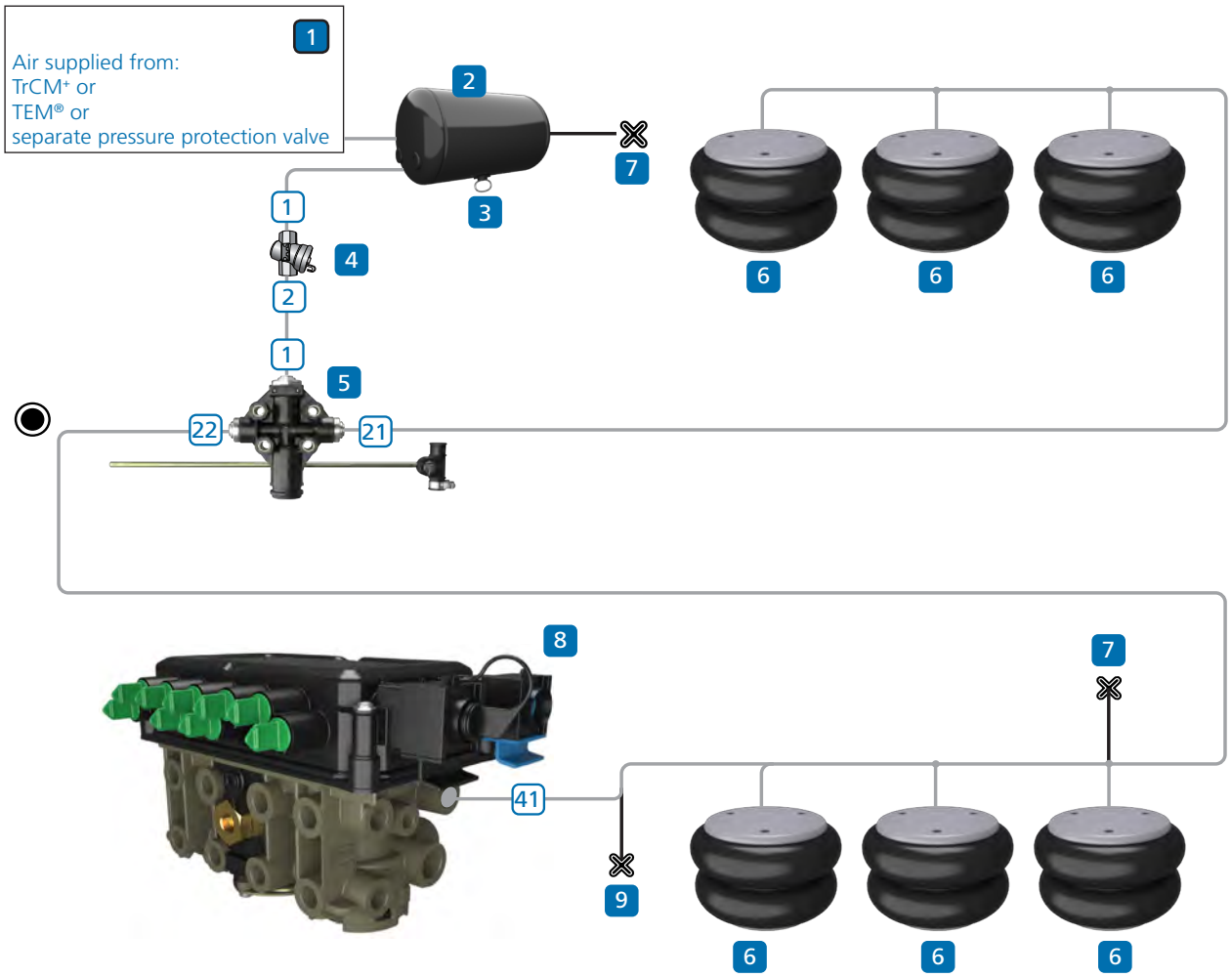

Note:
EB+ Gen3 should be supplied with clean / dry air.

Key

1 Port number

1 Components

Item	Description	Notes
1	Air suspension supply	Air supplied from TrCM+, TEM® or separate pressure protection valve
2	Air suspension reservoir	
3	Drain valve	
4	Pipe filter	
5	Levelling valve	
6	Suspension bellows	
7	Test point	
8	EB+ Gen3 assembly	
9	Test point simulator	

2M, levelling valve and COLAS+®

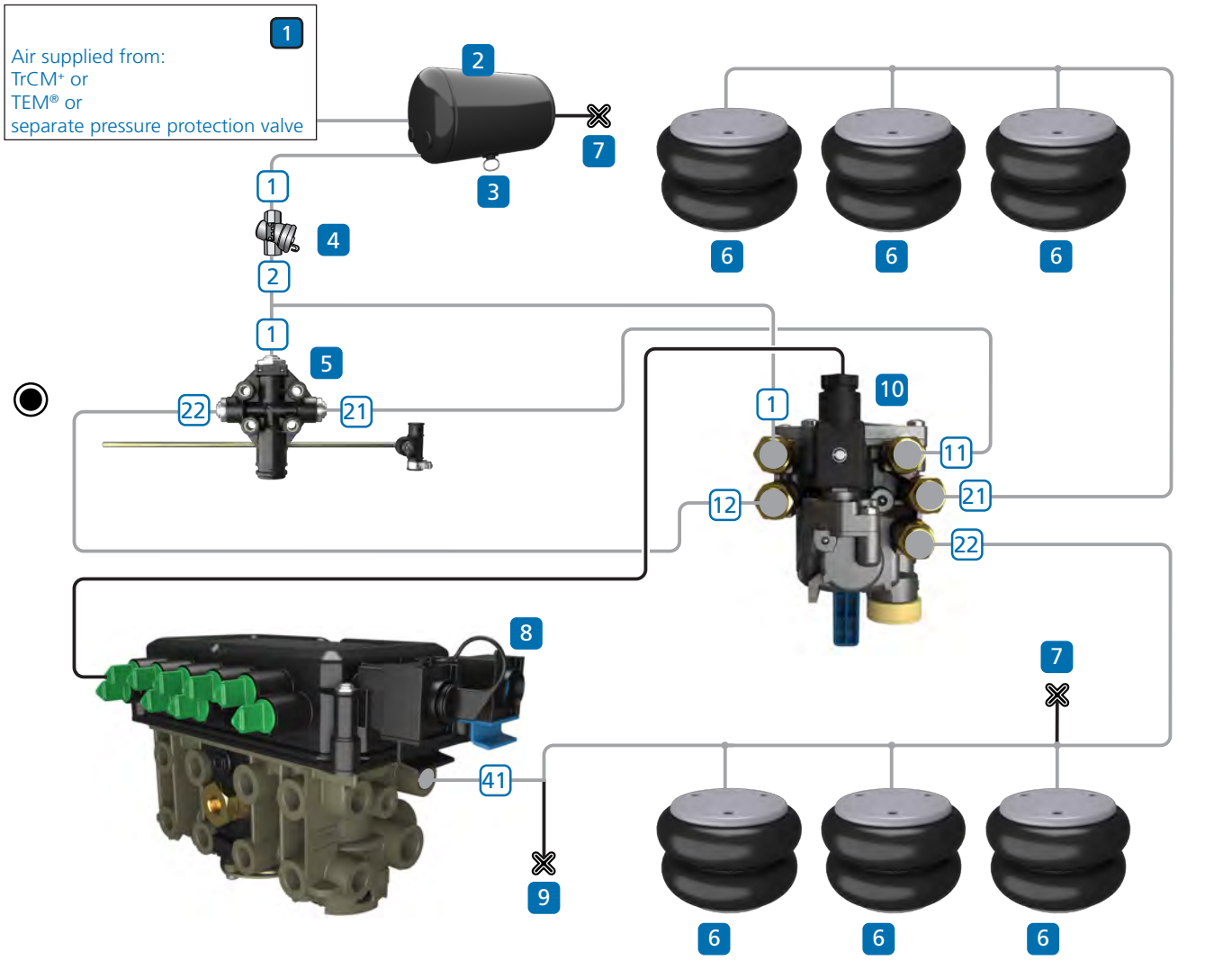

Note:
EB+ Gen3 should be supplied with clean / dry air.

Key

1 Port number

1 Components

Item	Description	Notes
1	Air suspension supply	Air supplied from TrCM+, TEM® or separate pressure protection valve
2	Air suspension reservoir	
3	Drain valve	
4	Pipe filter	
5	Levelling valve	
6	Suspension bellows	
7	Test point	
8	EB+ Gen3 assembly	
9	Test point simulator	
10	COLAS+®	

2M, COLAS+® and ILAS®-E

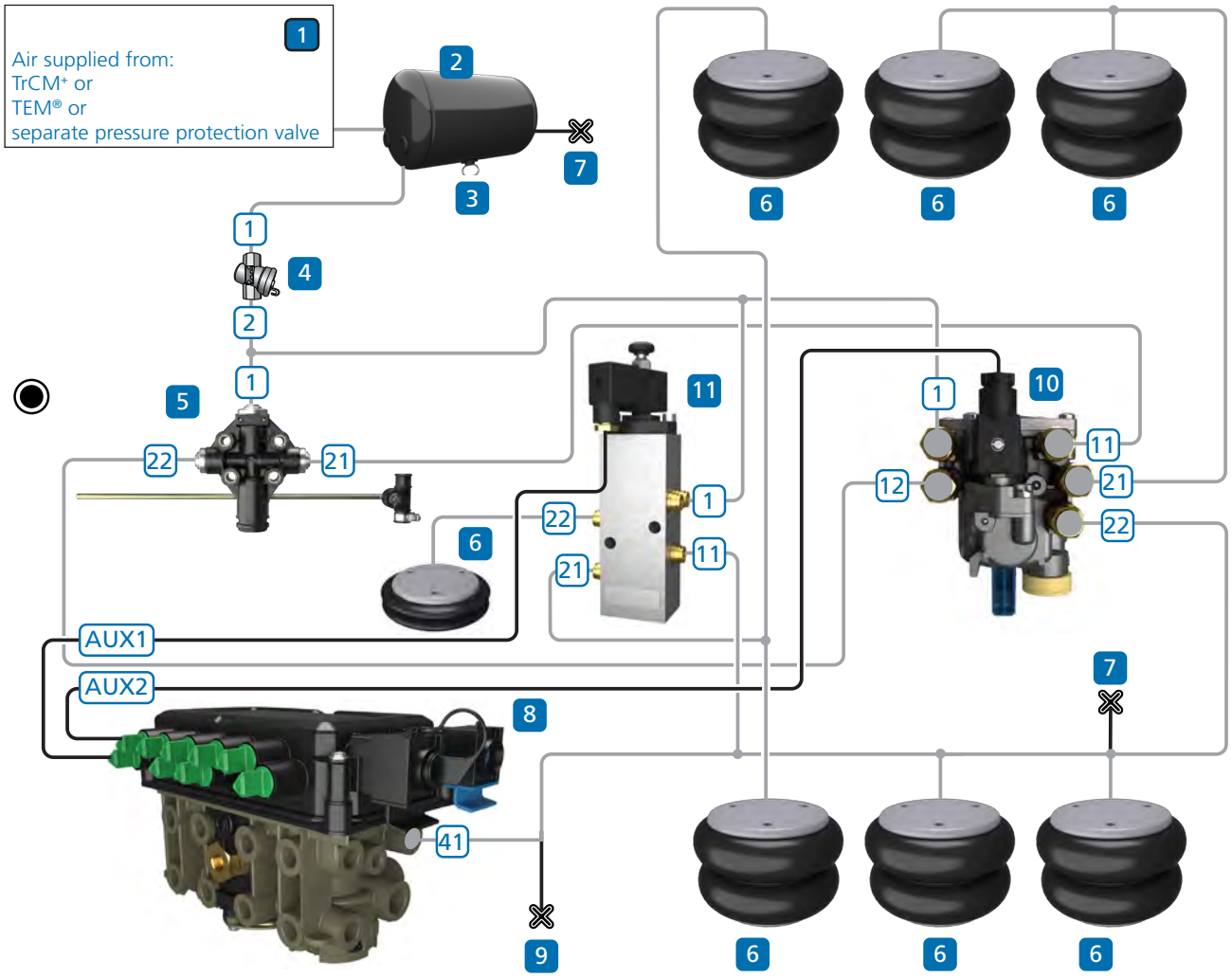

Note:
EB+ Gen3 should be supplied with clean / dry air.

Key

1 Port number

1 Components

Item	Description	Notes
1	Air suspension supply	Air supplied from TrCM+, TEM® or separate pressure protection valve
2	Air suspension reservoir	
3	Drain valve	
4	Pipe filter	
5	Levelling valve	
6	Suspension bellows	
7	Test point	
8	EB+ Gen3 assembly	
9	Test point simulator	
10	COLAS+®	
11	ILAS®-E	

2M, COLAS®+, height limitation, option 1 preferred (with DCV)

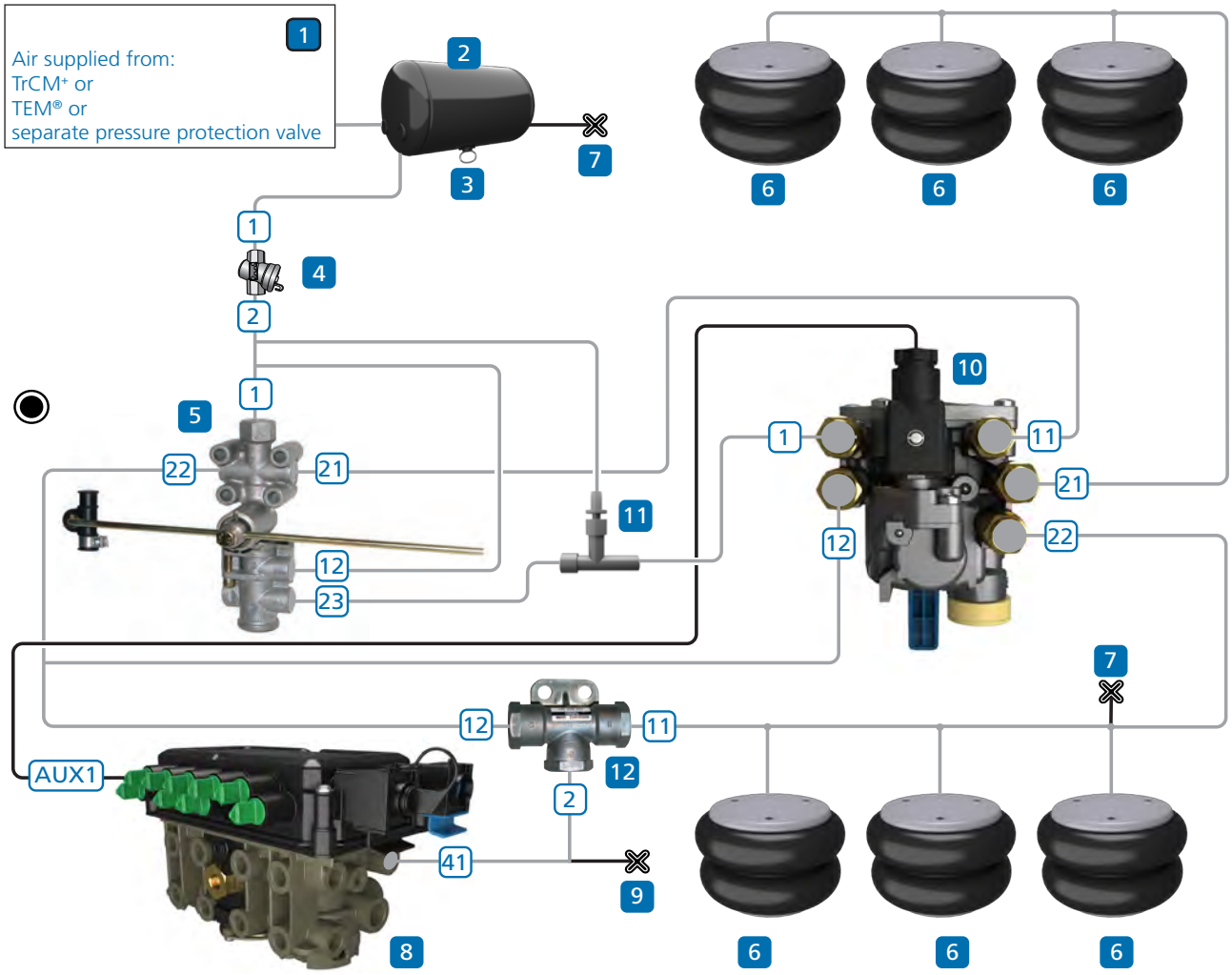

Note:
EB+ Gen3 should be supplied with clean / dry air.

Key

1 Port number

1 Components

Item	Description	Notes
1	Air suspension supply	Air supplied from TrCM+, TEM® or separate pressure protection valve
2	Air suspension reservoir	
3	Drain valve	
4	Pipe filter	
5	Levelling valve	With height limitation
6	Suspension bellows	
7	Test point	
8	EB+ Gen3 assembly	
9	Test point simulator	
10	COLAS®+	
11	Throttle restrictor	Optional upon installation specification
12	Double check valve (DCV)	Optional fitment

2M, COLAS®+, height limitation - option 2 (without DCV)

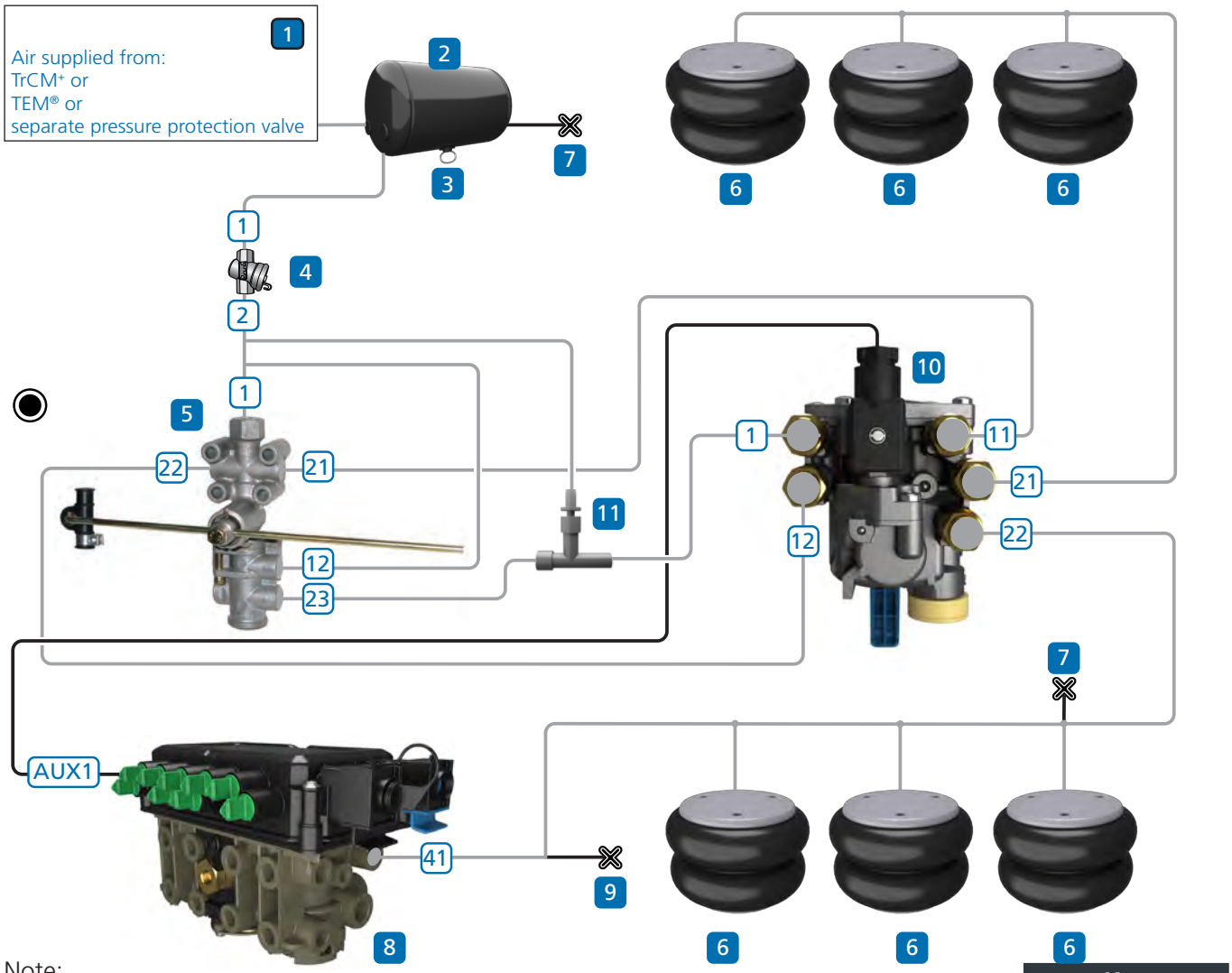

Note:
EB+ Gen3 should be supplied with clean / dry air.

Key

1 Port number

1 Components

Item	Description	Notes
1	Air suspension supply	Air supplied from TrCM+, TEM® or separate pressure protection valve
2	Air suspension reservoir	
3	Drain valve	
4	Pipe filter	
5	Levelling valve	With height limitation
6	Suspension bellows	
7	Test point	
8	EB+ Gen3 assembly	
9	Test point simulator	
10	COLAS®+	
11	Throttle restrictor	Optional upon installation specification

Piping layout – 3M brake

3M, with TrCM+

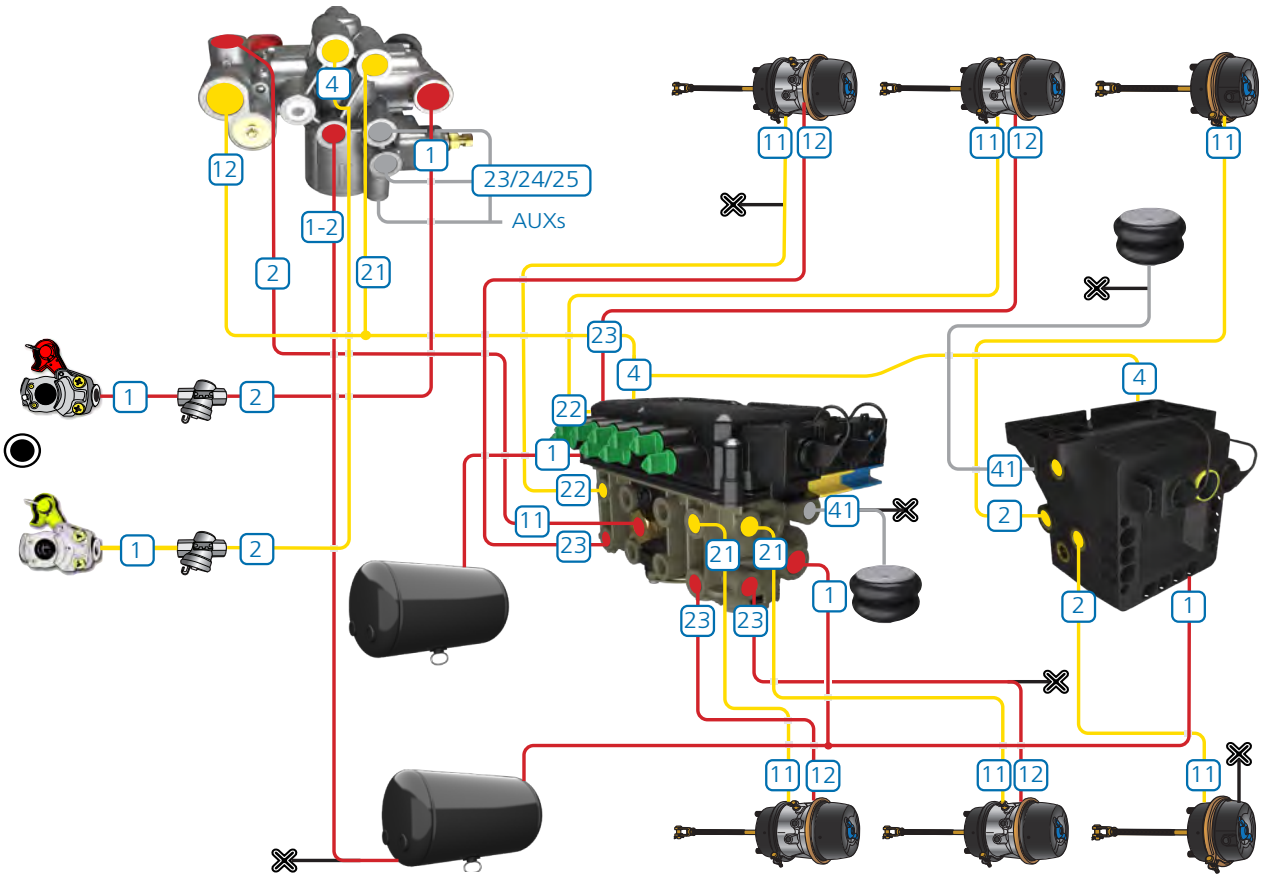

Note:
EB+ Gen3 should be supplied with clean / dry air.

Key

1 Port number

1 Components

Item	Description	Notes
1	Emergency coupling	Combined coupling & filter available
2	Service coupling	Combined coupling & filter available
3	Pipe filter	
4	TrCM+	
5	Air reservoir - brake	
6	Drain valve	
7	Test point	
8	EB+ Gen3 assembly	Use Premium version
9	Spring brake chamber	
10	Single diaphragm brake chamber	
11	Test point simulator	
12	Suspension bellows	
13	EB+ Gen3 Slave assembly	

3M, with TEM®

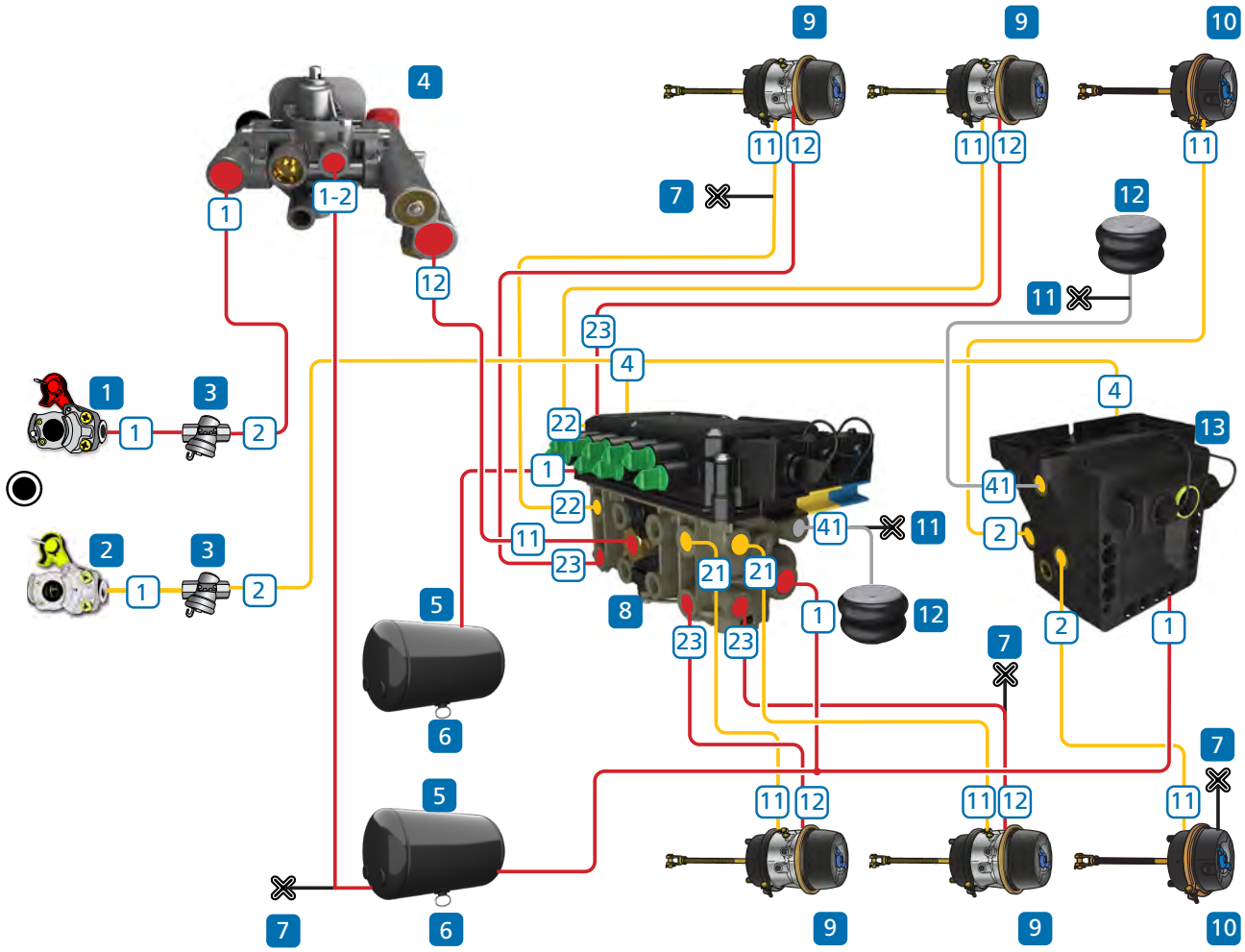

Note:
EB+ Gen3 should be supplied with clean / dry air.

Key

1 Port number

1 Components

Item	Description	Notes
1	Emergency coupling	Combined coupling & filter available
2	Service coupling	Combined coupling & filter available
3	Pipe filter	
4	TEM®	
5	Air reservoir - brake	
6	Drain valve	
7	Test point	
8	EB+ Gen3 assembly	Use Premium version
9	Spring brake chamber	
10	Single diaphragm brake chamber	
11	Test point simulator	
12	Suspension bellows	
13	EB+ Gen3 Slave assembly	

3M, full trailer with REV and individual park & shunt valves

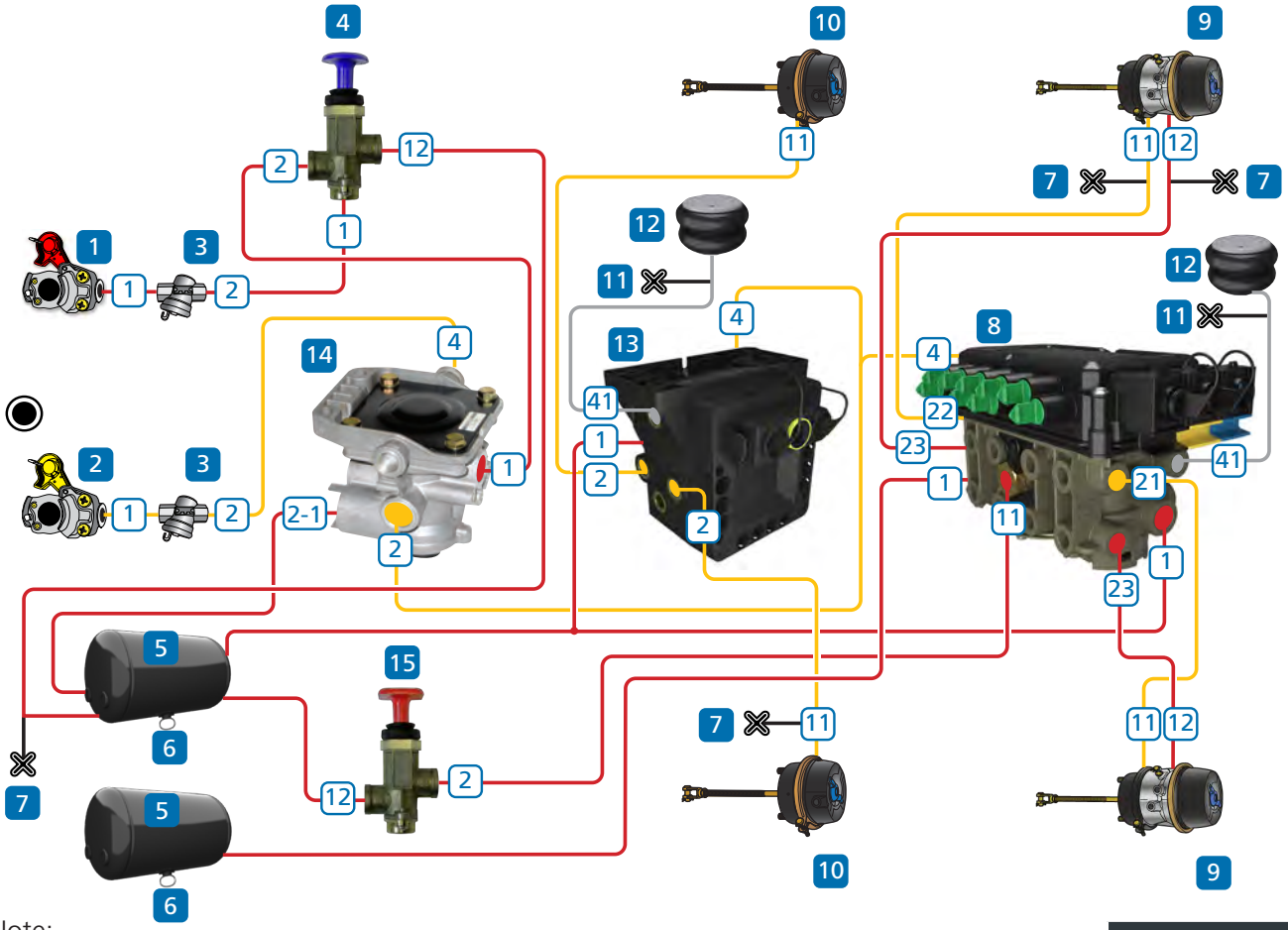

Note:
EB+ Gen3 should be supplied with clean / dry air.

Key

1 Port number

1 Components

Item	Description	Notes
1	Emergency coupling	Combined coupling & filter available
2	Service coupling	Combined coupling & filter available
3	Pipe filter	
4	Shunt valve	
5	Air reservoir - brake	
6	Drain valve	
7	Test point	
8	EB+ Gen3 master assembly	Use Premium version
9	Spring brake chamber	
10	Single diaphragm brake chamber	
11	Test point simulator	
12	Suspension bellows	
13	EB+ Gen3 Slave assembly	
14	Relay Emergency Valve (REV)	
15	Park valve	

System layout

The system fitted to your trailer may have 2 or 4 sensors and 2 or 3 modulators (EPRV's). The variants available being 2S / 2M, 4S / 2M and 4S / 3M.The system can be powered by the following methods.

ISO 7638 7-pin - Full EBS function fig 1.
ISO 7638 5-pin (no CAN data bus) - ABS + ELS function only fig 2.
ISO 12098 / ISO 1185 (24N) - stop light powering provides ABS function fig 3.

Note:
The ISO 7638 controls a trailer warning device in the driver's console.

ISO 7638 7-pin

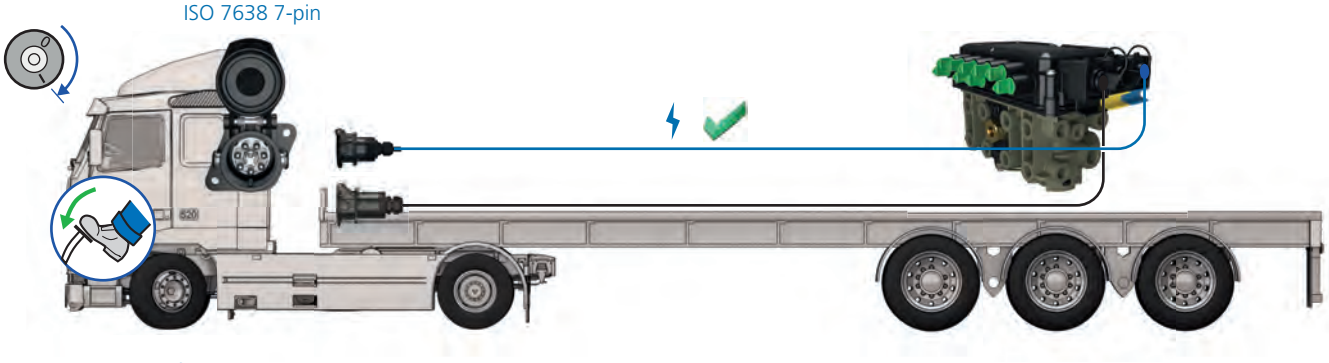

EBS

EB+
= full EBS function

Fig 1

ISO 7638 5-pin

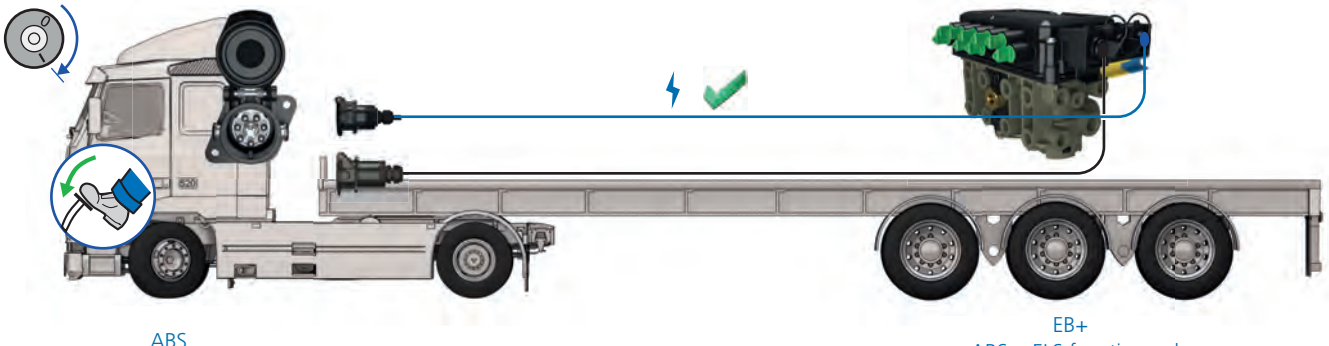

ABS

EB+
= ABS + ELS function only
(no CAN data bus)

Fig 2

ISO 12098 / ISO 1185 (24N)

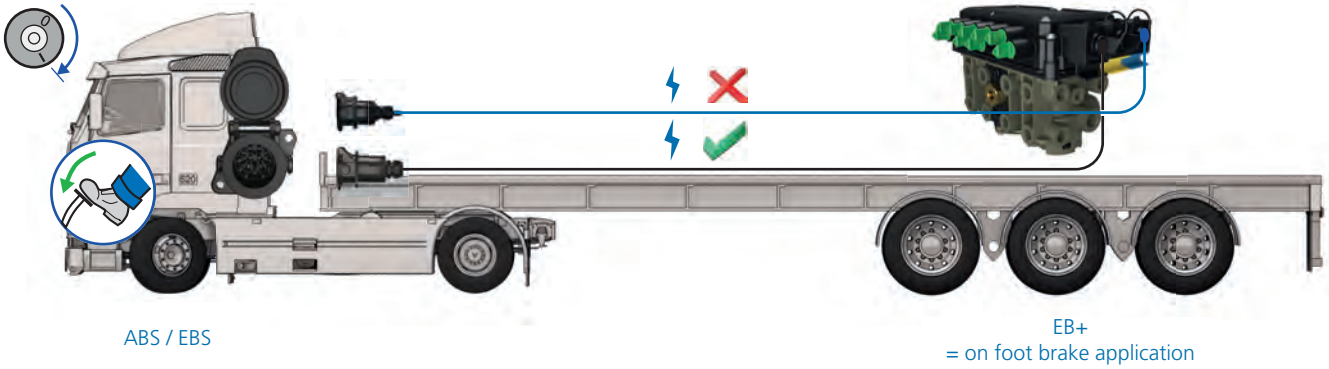

ABS / EBS

EB+
= on foot brake application
ABS function only

Fig 3

Wiring schematic

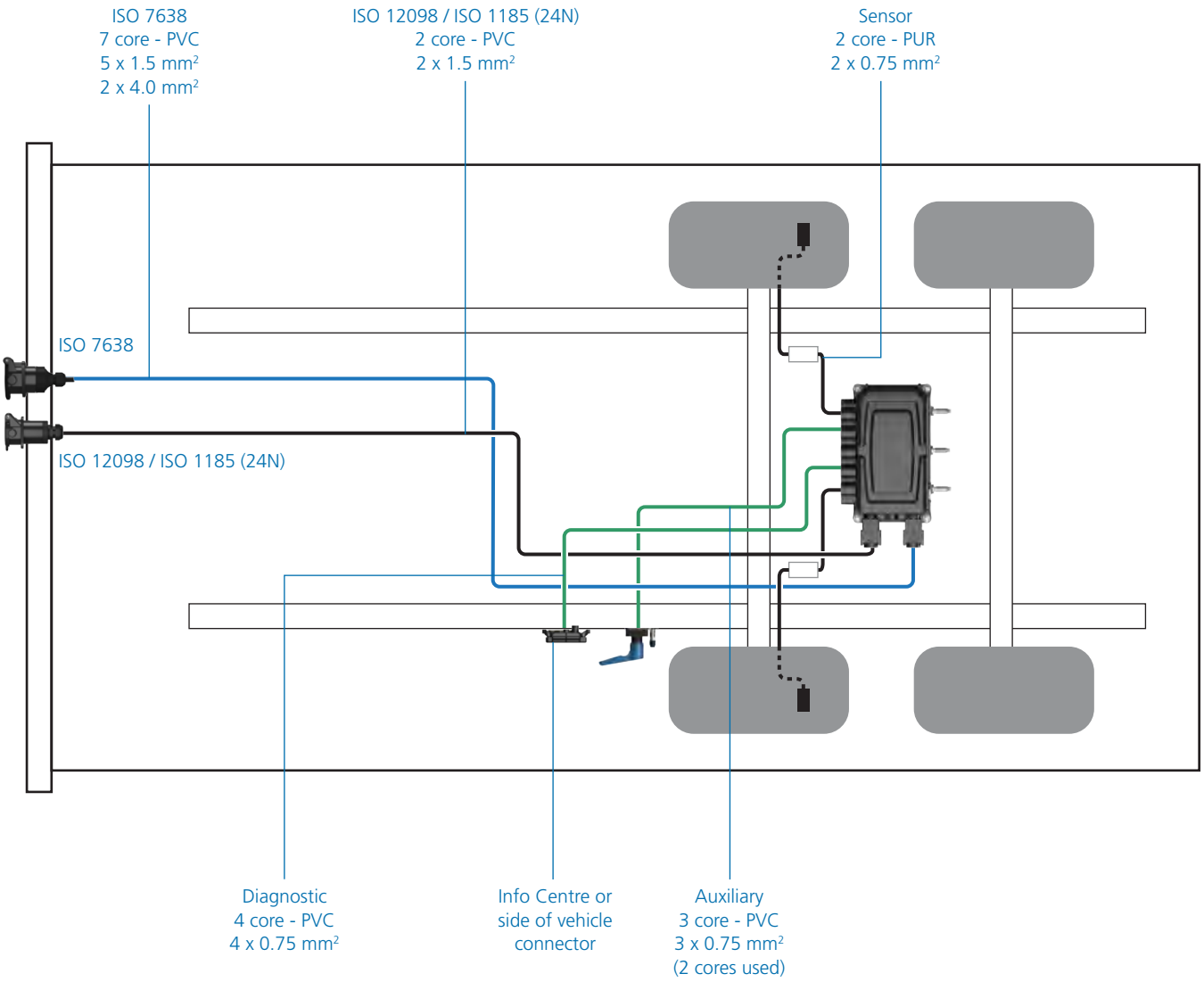

ISO 7638 socket assembly

ISO 7638 5-pin

Pin no	Description	Notes
1	Red (RD) 4 mm²	B+ batt
2	Black (BK) 1.5 mm²	B+ ign
3	Yellow (YE) 1.5 mm²	B- earth
4	Brown (BN) 4 mm²	B- earth
5	White (W) 1.5 mm²	Lamp

Pin detail and identification key location

ISO 7638 7-pin

Pin no	Description	Notes
1	Red (RD) 4 mm²	B+ batt
2	Black (BK) 1.5 mm²	B+ ign
3	Yellow (YE) 1.5 mm²	B- earth
4	Brown (BN) 4 mm²	B- earth
5	White (W) 1.5 mm²	Lamp
6	White / green (W / GN) 1.5 mm²	CAN hi
7	White / brown (W / BN) 1.5 mm²	CAN lo

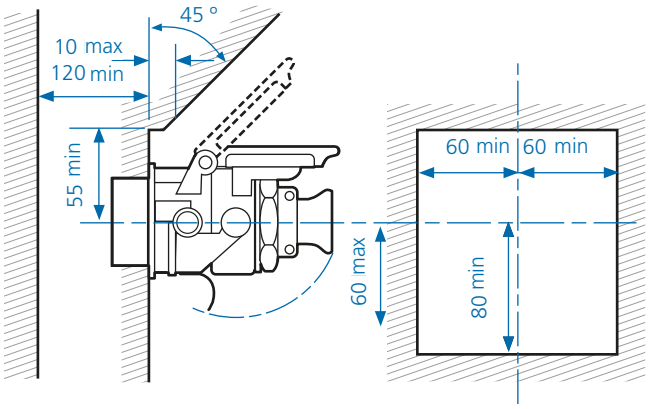

Clearance dimensions

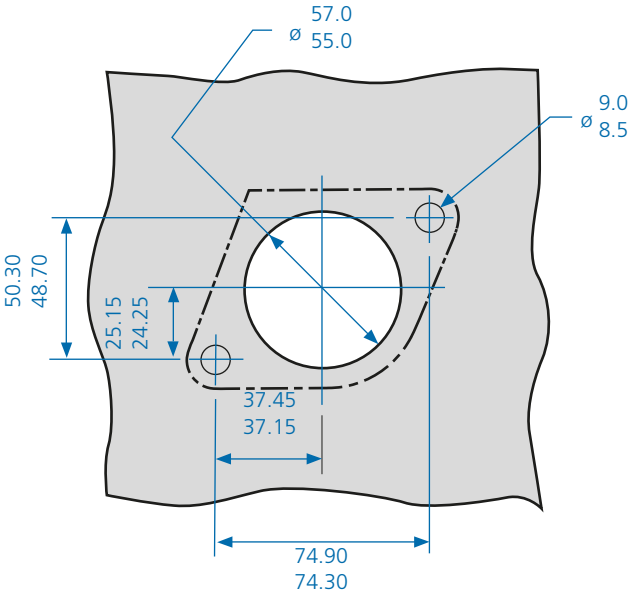

Socket mounting dimensions

Towing vehicle EBS / ABS ISO 7638 wiring

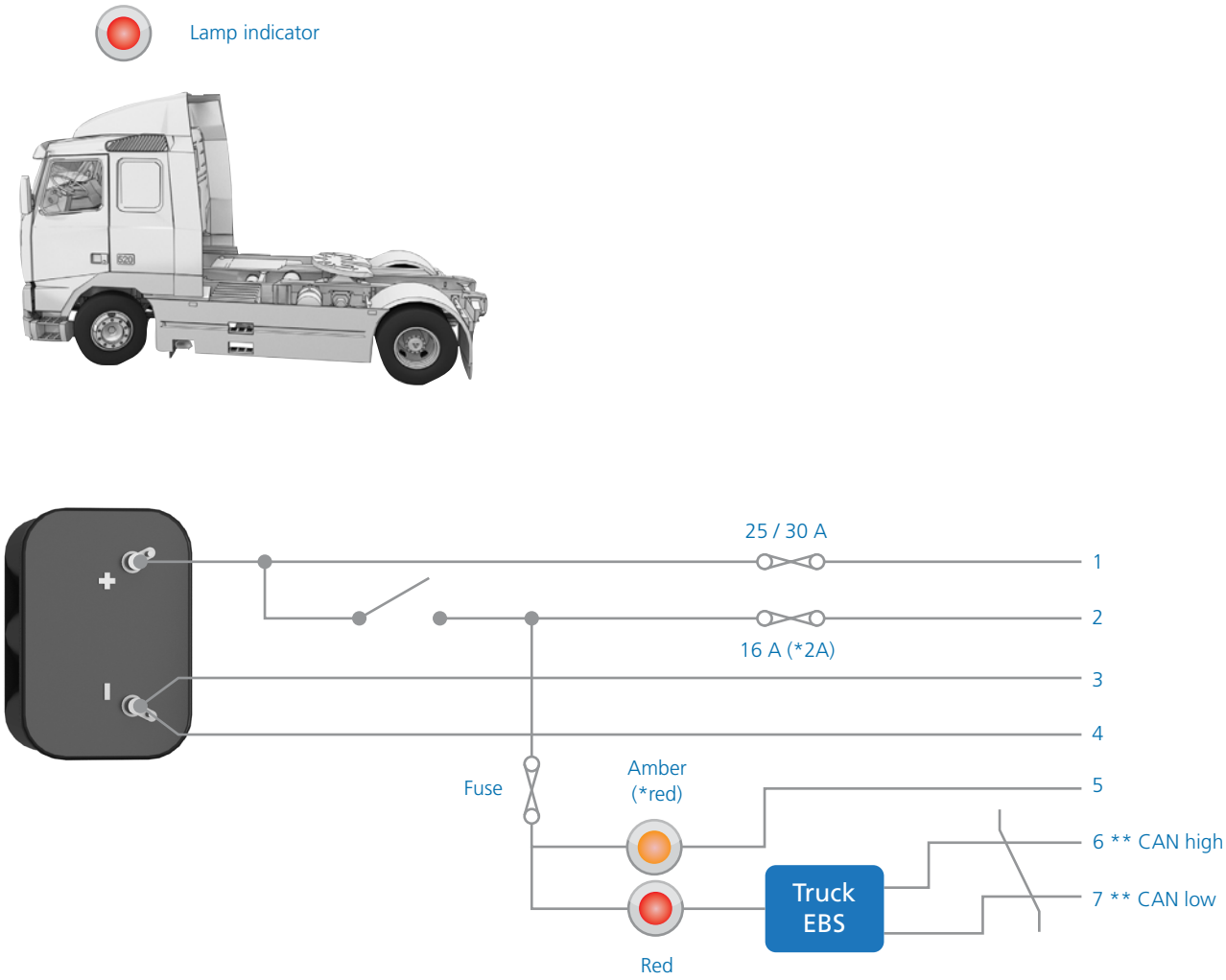

* ISO 7638 - 1996
** Not fitted on ISO 7638 - 1995

ISO 7638 7-pin

Pin no	Description	Notes
1	Red (RD) 4 mm²	B+ batt
2	Black (BK) 1.5 mm²	B+ ign
3	Yellow (YE) 1.5 mm²	B- earth
4	Brown (BN) 4 mm²	B- earth
5	White (W) 1.5 mm²	Lamp
6	White / green (W / GN) 1.5 mm²	CAN hi
7	White / brown (W / BN) 1.5 mm²	CAN lo

ECU connections - 2M

1	ISO 7638
2	ISO 12098 / ISO 1185 (24N)
3	AUX 1
4	AUX 2
5	AUX 3
6	AUX 4
7	AUX 5
8	Sensor S2B
9	Sensor S1B*
10	DIAGN
11	DIAGN
12	Sensor S1A*
13	Sensor S2A

* minimum requirement for a 2S / 2M system

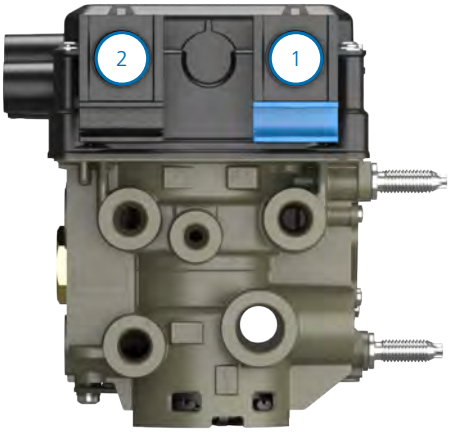

EB+ Gen3 2M

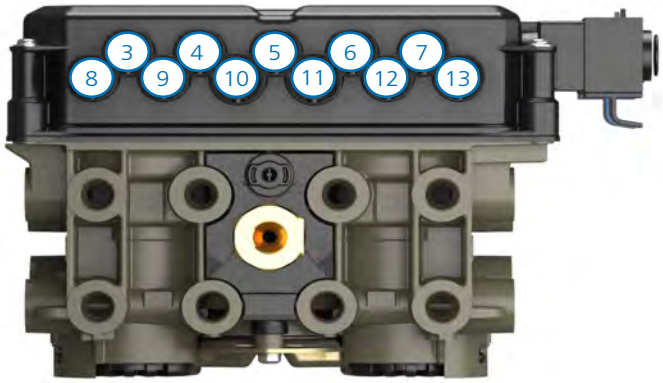

Power up the EB+ ECU. During the self check procedure the system displays the following functions: the trailer EBS warning light comes ‘On’ and stays ‘On’. One audible cycle is produced by the EPRV’s (EBS valves).

At the same time the led on the USB dongle will illuminate ‘red / green’ to show that is receiving a power supply from the ECU.

Red / green led

Note:
It is possible to use the DIAG+ software to set the ECU parameters with only the power supply ISO 7638 and interconnection cable (Master to Slave ECU) connected. But diagnostic codes will be logged and will require to be deleted on the final vehicle installation.

2 sensors, 2 modulators, 3 AUX, with Info Centre 2

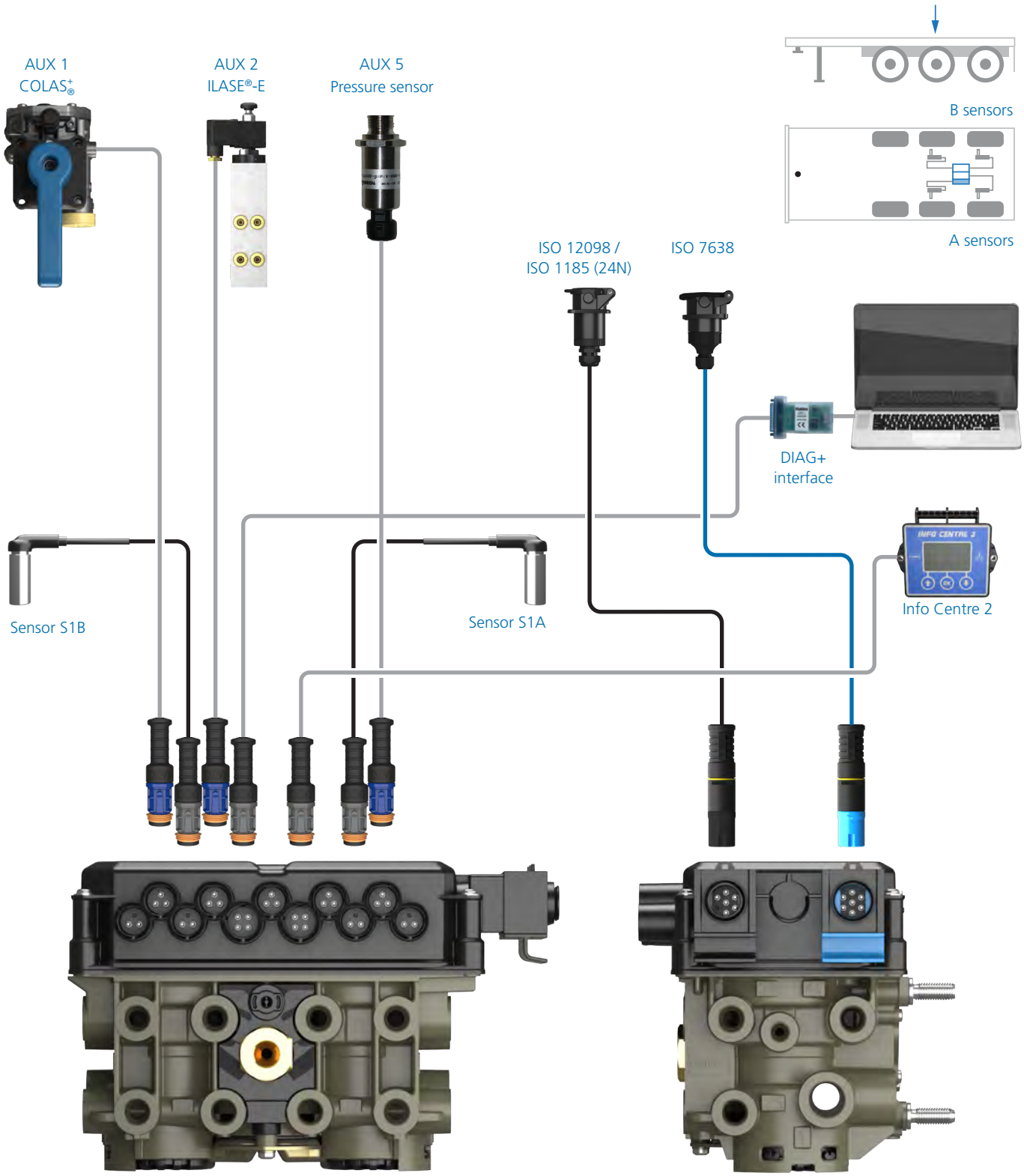

Connections shown:

ISO 7638	ISO 12098	DIAG	S1A	S1B	S2A	S2B	AUX 1	AUX 2	AUX 3	AUX 4	AUX 5
✔	✔	✔	✔	✔			✔	✔			✔

4 sensors, 2 modulators, 3 AUX, with Info Centre 2 and TPMS

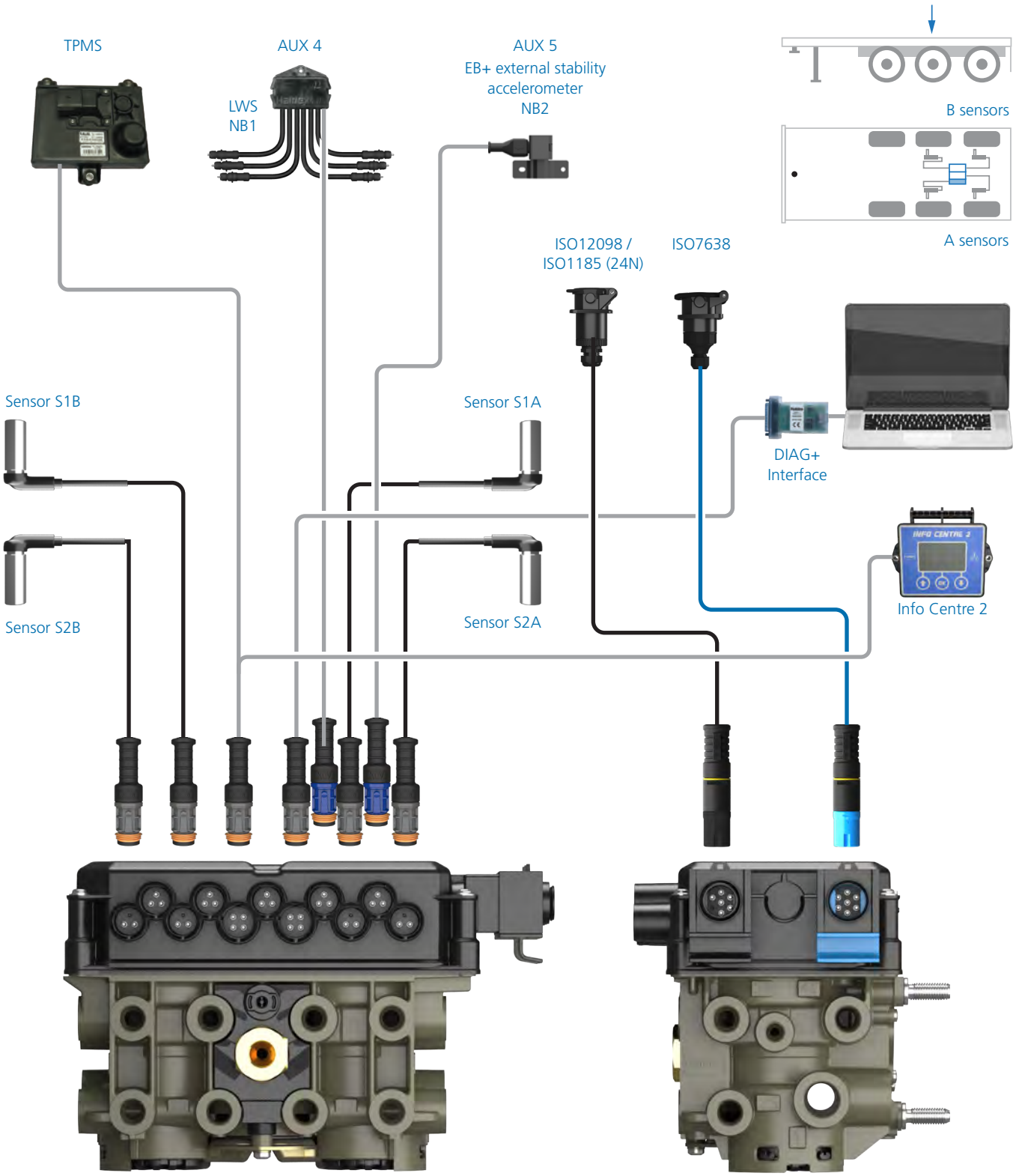

Connections shown:

NB1 - Lining wear sensor to be fitted in AUX 4 only
NB2 - External stability accelerometer to be fitted in AUX 5 only

ISO 7638	ISO 12098	DIAG	S1A	S1B	S2A	S2B	AUX 1	AUX 2	AUX 3	AUX 4	AUX 5
✔	✔	✔	✔	✔	✔	✔				✔	✔

ECU connections - 3M

1	ISO 7638
2	3M link cable
3	ISO 12098 / ISO 1185 (24N)
4	AUX 1
5	AUX 2
6	AUX 3
7	AUX 4
8	AUX 5
9	Sensor S2B
10	Sensor S1B
11	DIAGN
12	DIAGN
13	Sensor S1A
14	Sensor S2A

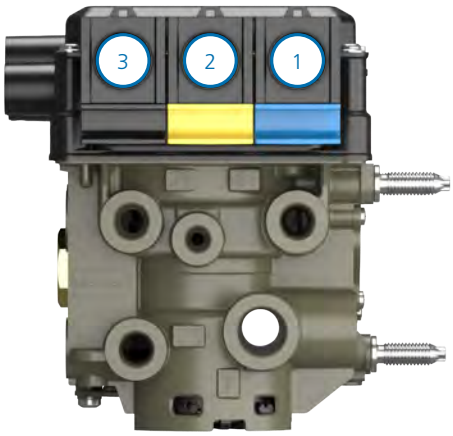

EB+ Gen3 3M

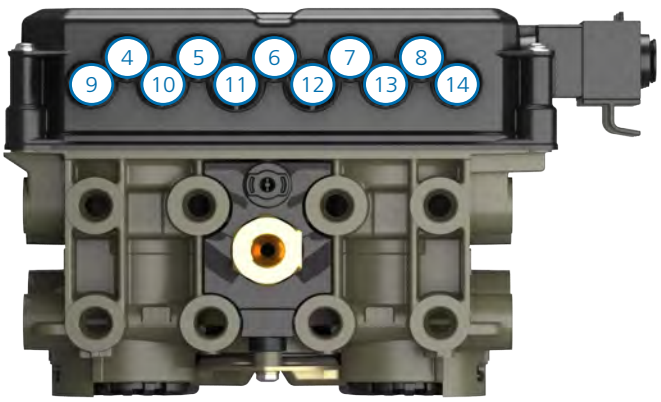

Full trailer 3M system

Make connection to the Slave ECU using the interconnecting cable.

It is possible to use the DIAG+ software to set the ECU parameters with only the power supply ISO 7638 and interconnection cable (Master to Slave ECU) connected. But diagnostic codes will be logged and will require to be deleted on the final vehicle installation.

Note:
The EB+ Gen3 Slave assembly (ECU & valve) is only supplied as one complete unit that cannot / should not be separated.

Slave ECU

4 sensors, 3 modulators, 2 AUX, with Info Centre 2

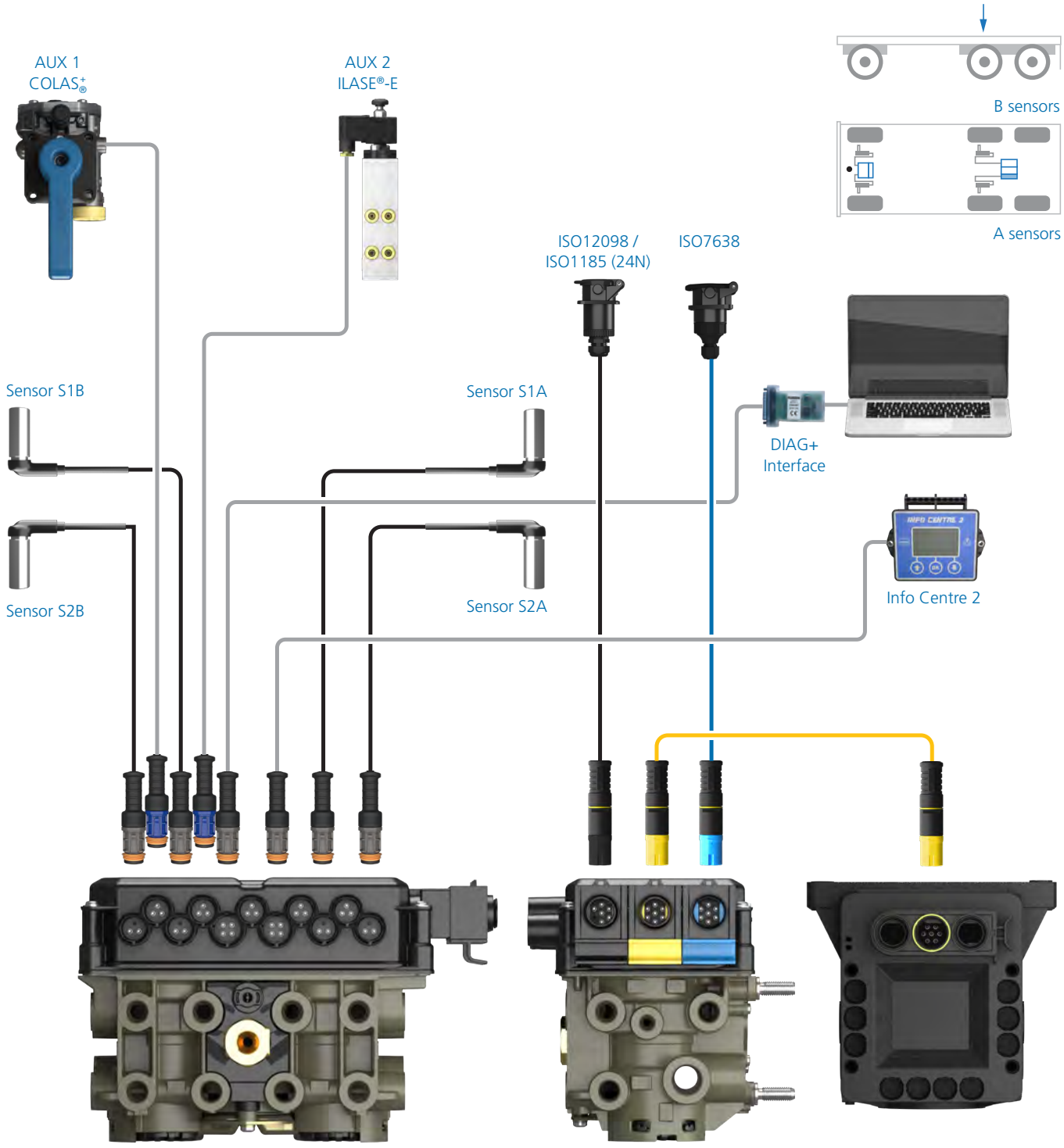

Connections shown:

ISO 7638	ISO 12098	DIAG	S1A	S1B	S2A	S2B	AUX 1	AUX 2	AUX 3	AUX 4	AUX 5	3M
✔	✔	✔	✔	✔	✔	✔		✔				✔

ECU connectors - slide lock

Slide lock power connectors

Unlock the housing by sliding down lever ‘G’.

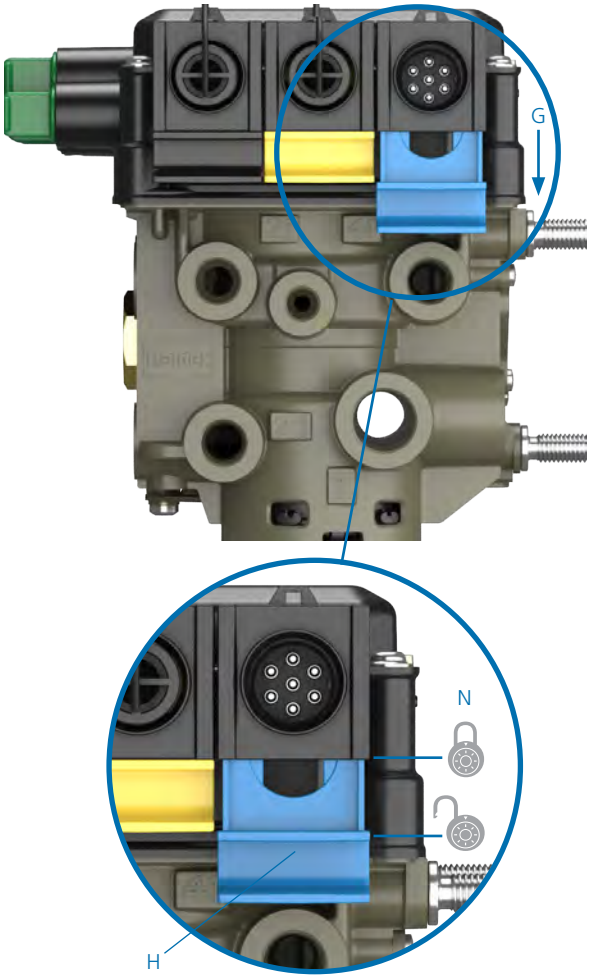

Make sure slider is in the unlocked position ‘H’.

Ensure contact pins and seal are kept clean and free of any contamination prior to installation.

Push in lock slider ‘M’ to secure in place all plugs and connectors. Do not use extreme force to push in slider.

Make sure slider is in the lock position ‘N’.

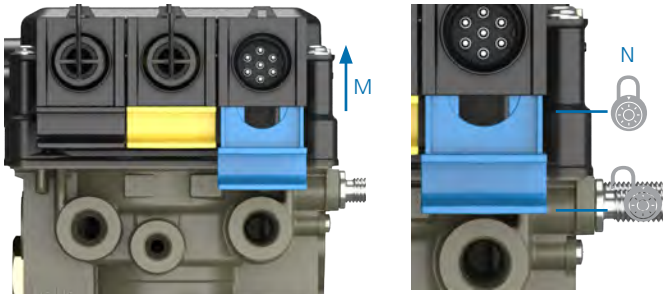

Make sure that all connectors and blanking plugs are fully inserted into the ECU slide lock housing.

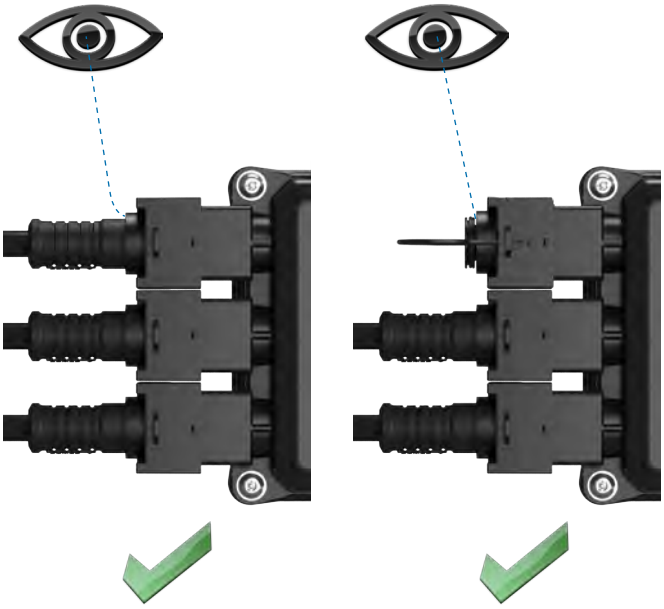

Warning:

- If difficulty is encountered in locking the slider, check plug or connector for correct fitment.
- If the white o-ring is visible, the plug is not installed correctly and slider will not lock into position.

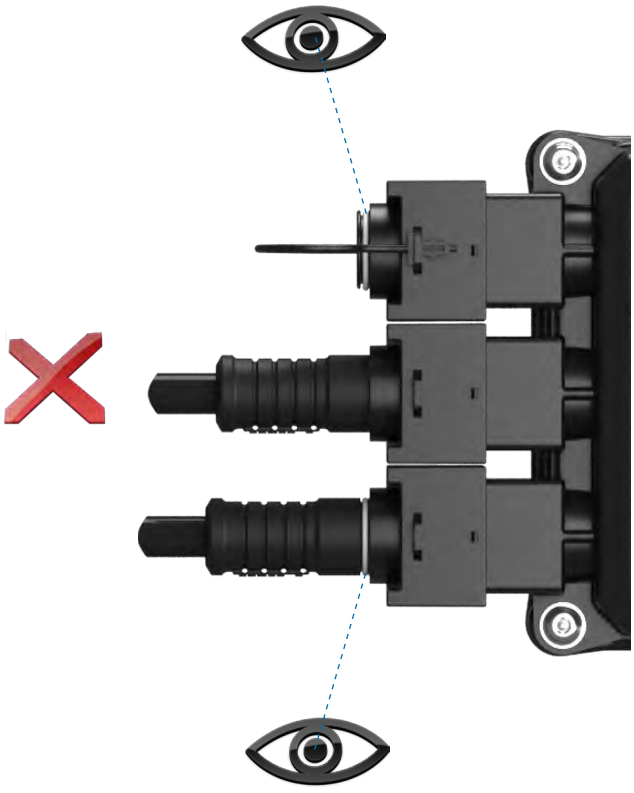

ISO 7638 (PWR-A)

Feed all connectors through the chassis with protective cap in place to avoid connector sockets being contaminated.

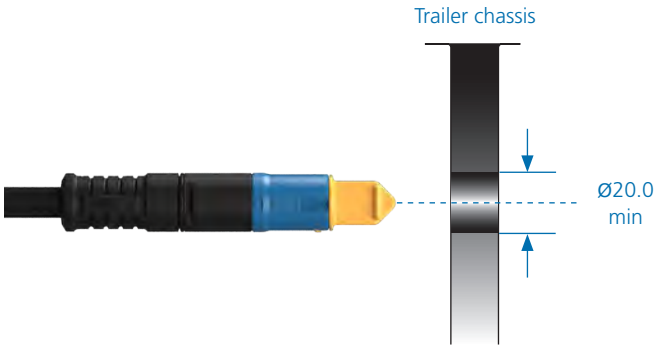

Remove protective cap from end of connector before connecting into the ECU.

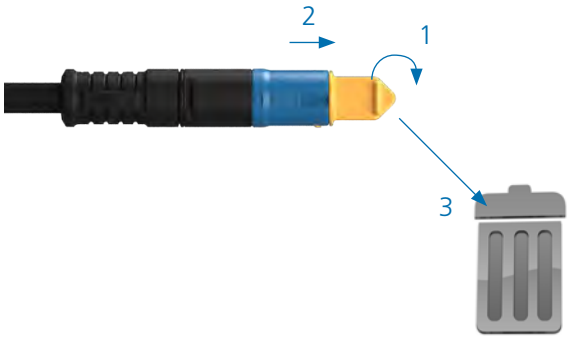

Connections: make sure that all connections (socket and plug) are clean and dry before assembly.

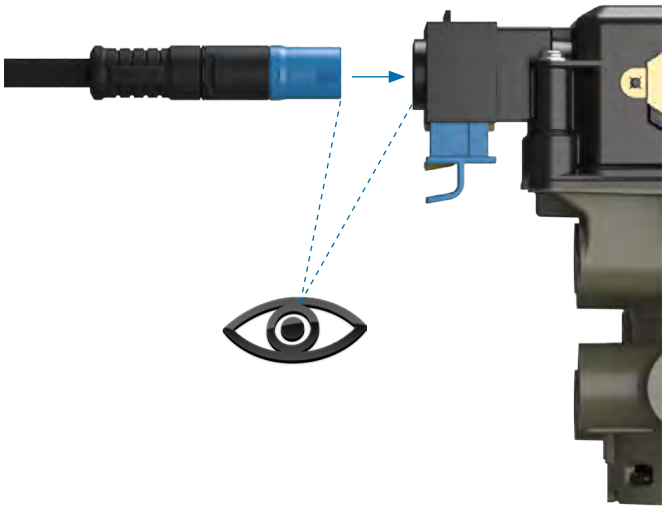

Remove the blanking plug from the ‘PWR-A’ position.

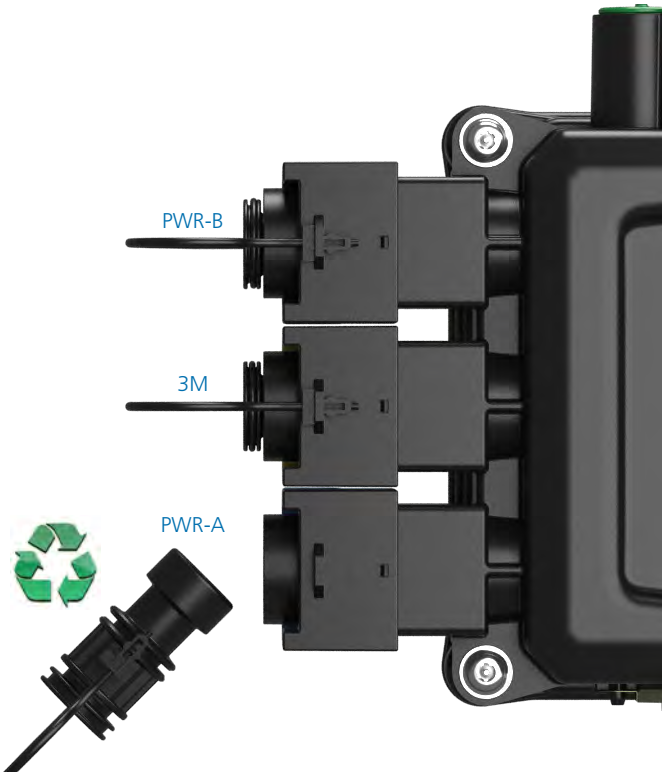

Identify orientation of the ISO 7638 blue coloured connector.

Ensure contact pins and seal are clean and free of any contamination prior to installation.

In position ‘PWR-A’, on the slide lock housing, insert connector fully home.

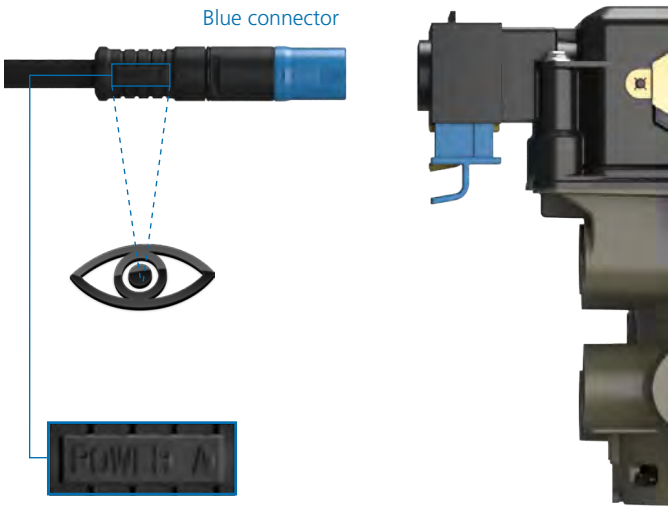

ISO 12098 / ISO 1185 (24N) (PWR-B)

Feed all connectors through the chassis with protective cap in place to avoid connector sockets being contaminated.

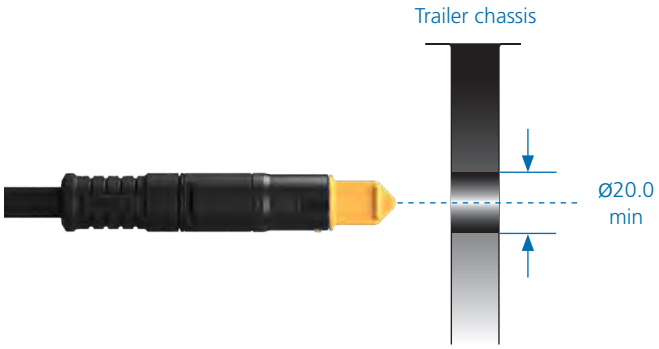

Remove protective cap from end of connector before connecting into the ECU.

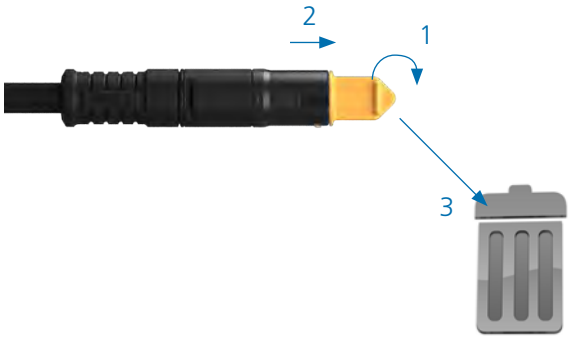

Connections: make sure that all connections (socket and plug) are clean and dry before assembly.

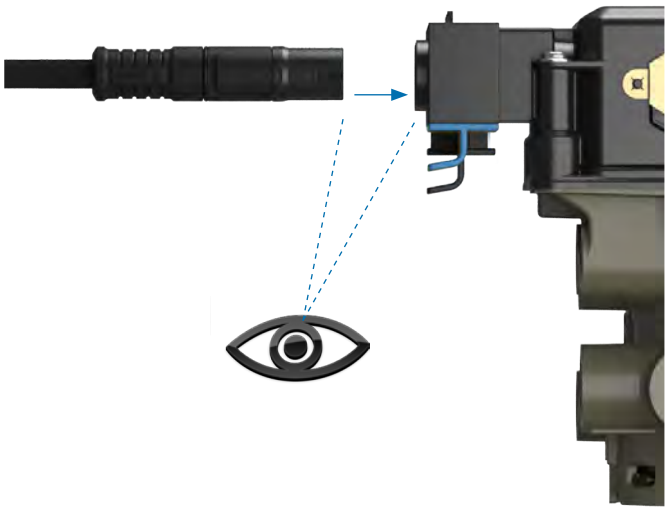

Remove the blanking plug from the ‘PWR-B’ position.

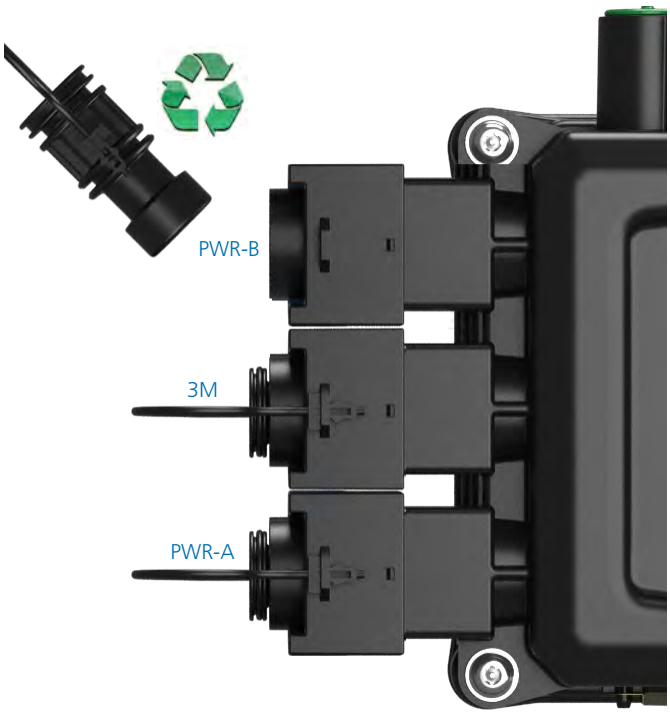

Identify orientation of the ISO 12098 / ISO 1185 (24N) black coloured connector.

Ensure contact pins and seal are clean and free of any contamination prior to installation.

In position ‘PWR-B’, on the slide lock housing, insert connector fully home.

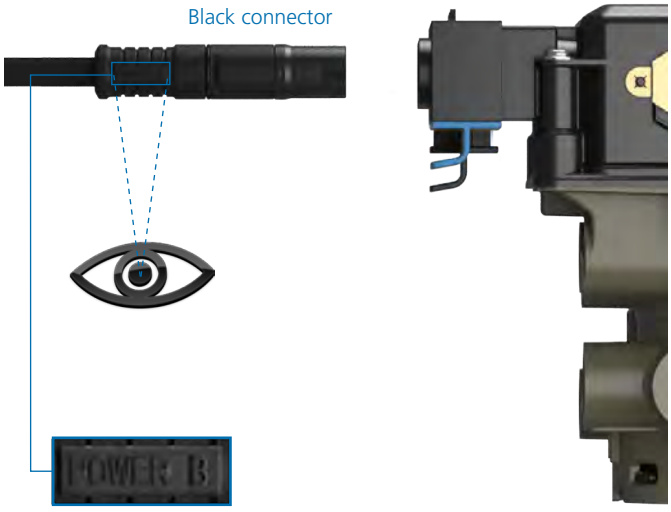

3M link cable

Feed all connectors through the chassis with protective cap in place to avoid connector sockets being contaminated.

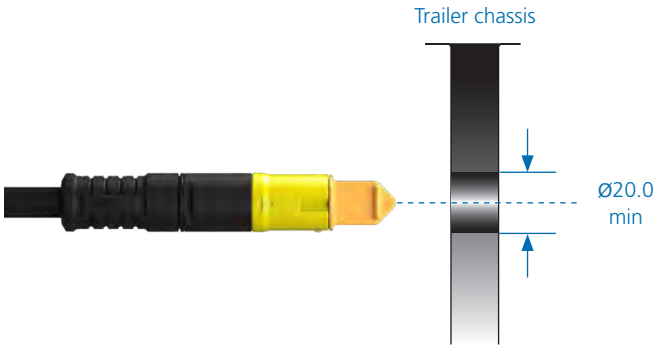

Remove protective cap from end of connector before connecting into the ECU.

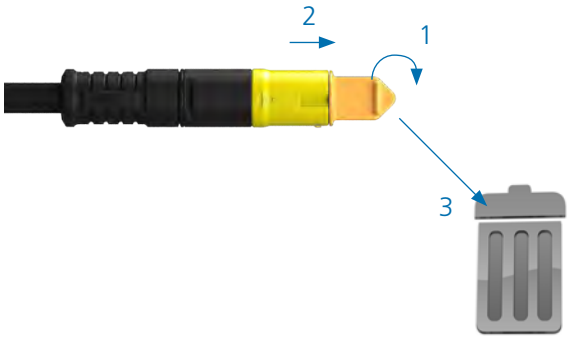

Connections: make sure that all connections (socket and plug) are clean and dry before assembly.

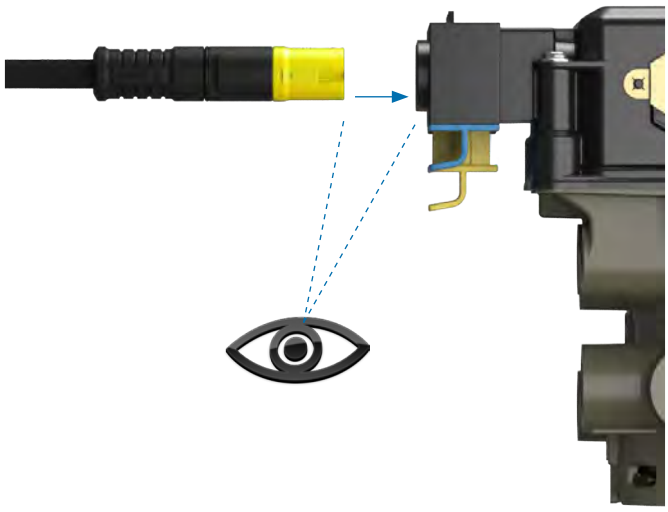

Remove the blanking plug from the ‘3M’ position.

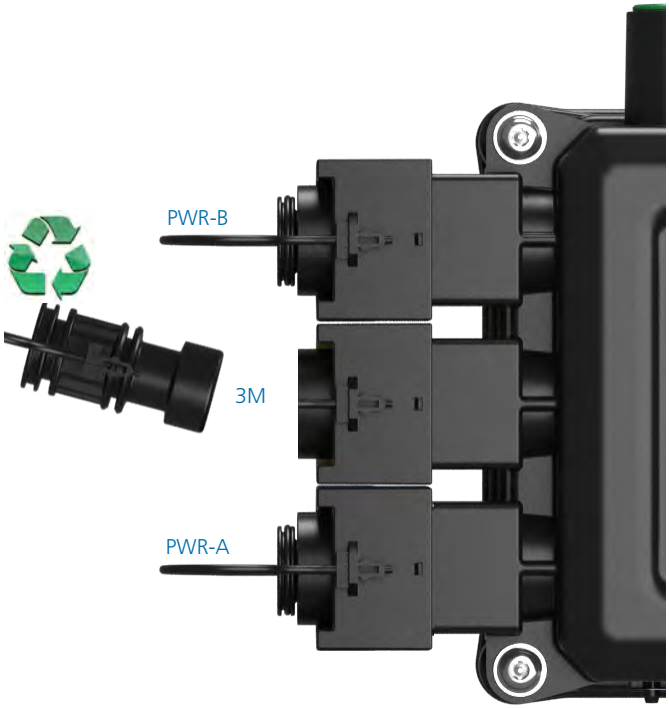

Identify orientation of the 3M link cable yellow coloured connector.

Ensure contact pins and seal are clean and free of any contamination prior to installation.

In position ‘3M’, on the slide lock housing, insert connector fully home.

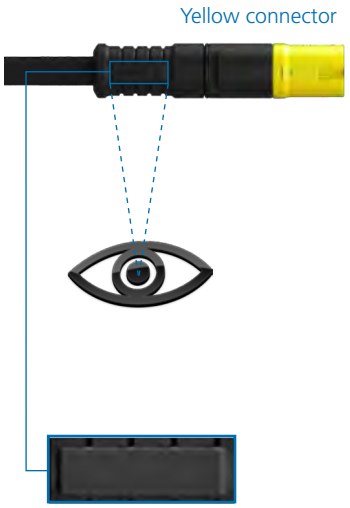

ECU connectors – sensor & AUX

The ECU is supplied with blanking plugs in positions indicated. These require to be removed to allow fitment of additional sensors or permitted ancillary equipment.

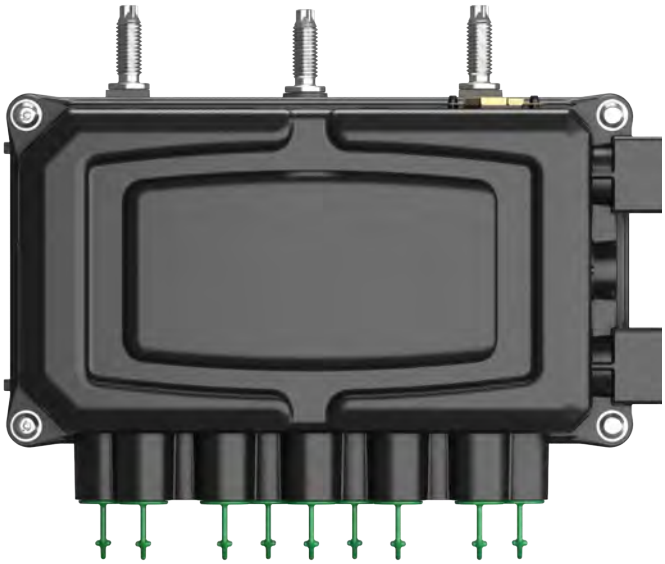

Example - AUX 1 connection

Identify the AUX 1 position on the front face of the ECU.

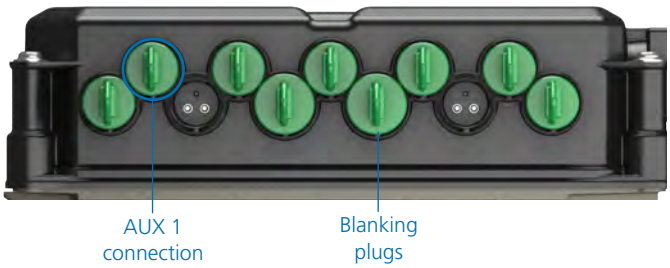

Locate the locking tag 'O' position.

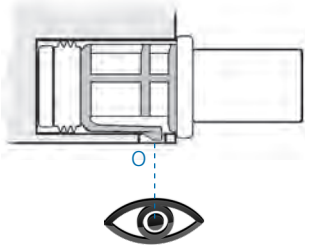

With a tool 'P' having a flat end of Ø3-2 mm insert and press in locking tab of plug. While depressed pull out plug from housing.

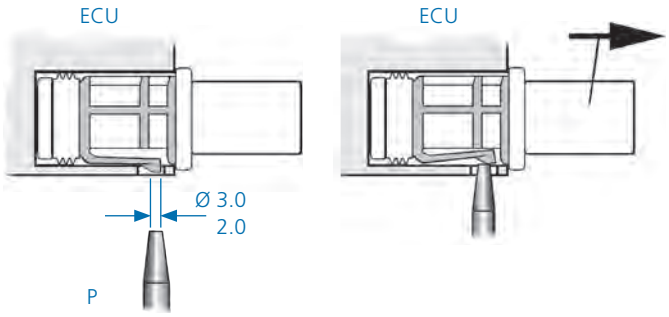

Identify orientation:

- Sensor black body connector
- Auxiliary blue body connector
- Diagnostic black body connector

Ensure contact pins and seal are kept clean and free of any contamination prior to installation. Insert fully home.

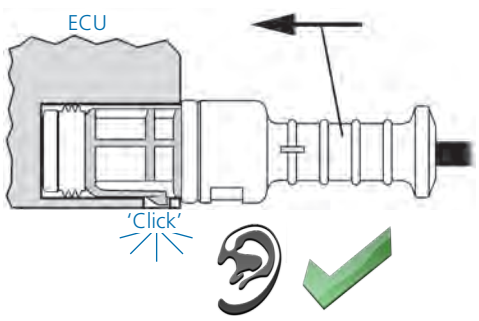

Sensor connector

Identification tags are incorporated on either side of the sensor / ECU connector.
These must be removed to identify the appropriate sensor before connecting into the ECU.

ECU identification	Tags removed 1 2 3 4 A B P 5	Component
S1A		Sensor 1A
S1B		Sensor 1B
S2A		Sensor 2A
S2B		Sensor 2B

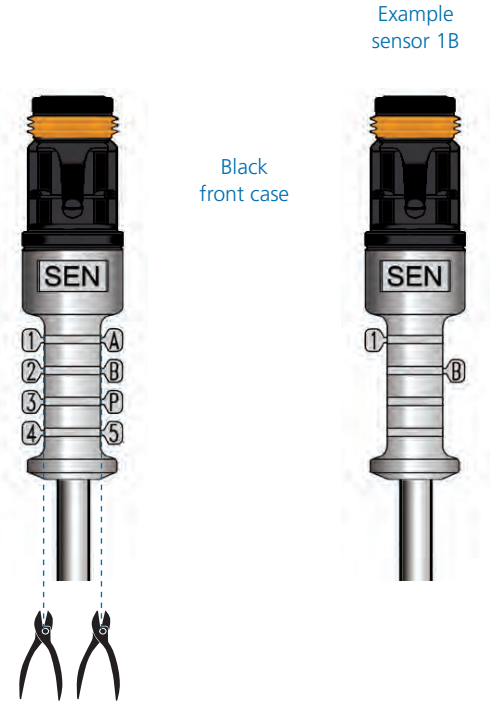

Auxiliary connector

Identification tags are incorporated on either side of the auxiliary connector. These must be removed to identify the appropriate usage before connecting into the ECU.

ECU identification	Tags removed 1 2 3 4 A B P 5	Component
AUX 1		COLAS®
AUX 2		ILAS®-E
AUX 3		Warning lamp
AUX 4		LWS
AUX 5		Stability

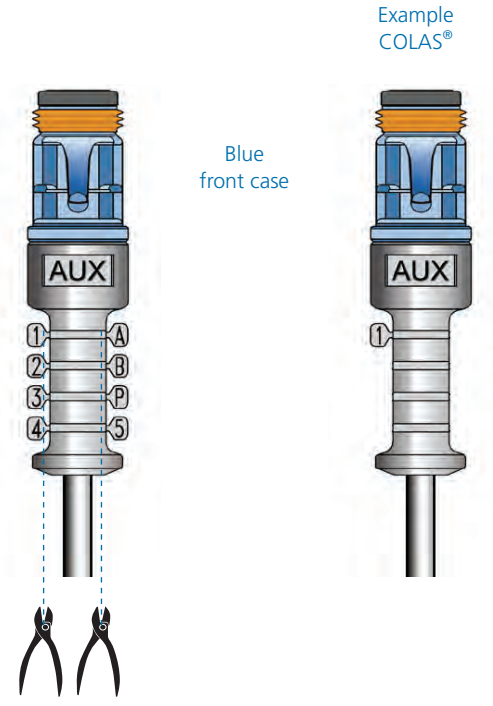

ECU connector identification

AUX 1	AUX 2 & 3	AUX 4	AUX 5
COLAS®	COLAS®	Lining wear sensor	Lateral accelerometer
Retarder	Retarder	General purpose input	General purpose input
Trailer lamp	Trailer lamp	Control line sensor	Control line sensor
ILAS®-E front	ILAS®-E front	Soft Docking	Soft Docking
ILAS®-E rear	ILAS®-E rear	Mechanical height sensor	Mechanical height sensor
AUX power	AUX power	Mechanical height sensor remote	Mechanical height sensor remote
Steer axle lock	Steer axle lock	External pressure sensor	External pressure sensor
Service lamp	Service lamp		
Overload lamp	Overload lamp		
Remote overload lamp	Remote overload lamp		
Stability lamp	Stability lamp		
General purpose output	ILAS®-E front manual		
TA+	ILAS®-E rear manual		
Info Point	General purpose output		
Info Point / COLAS®	TA+		
Speed lock	Speed lock		
TPMS lamp	TPMS lamp		

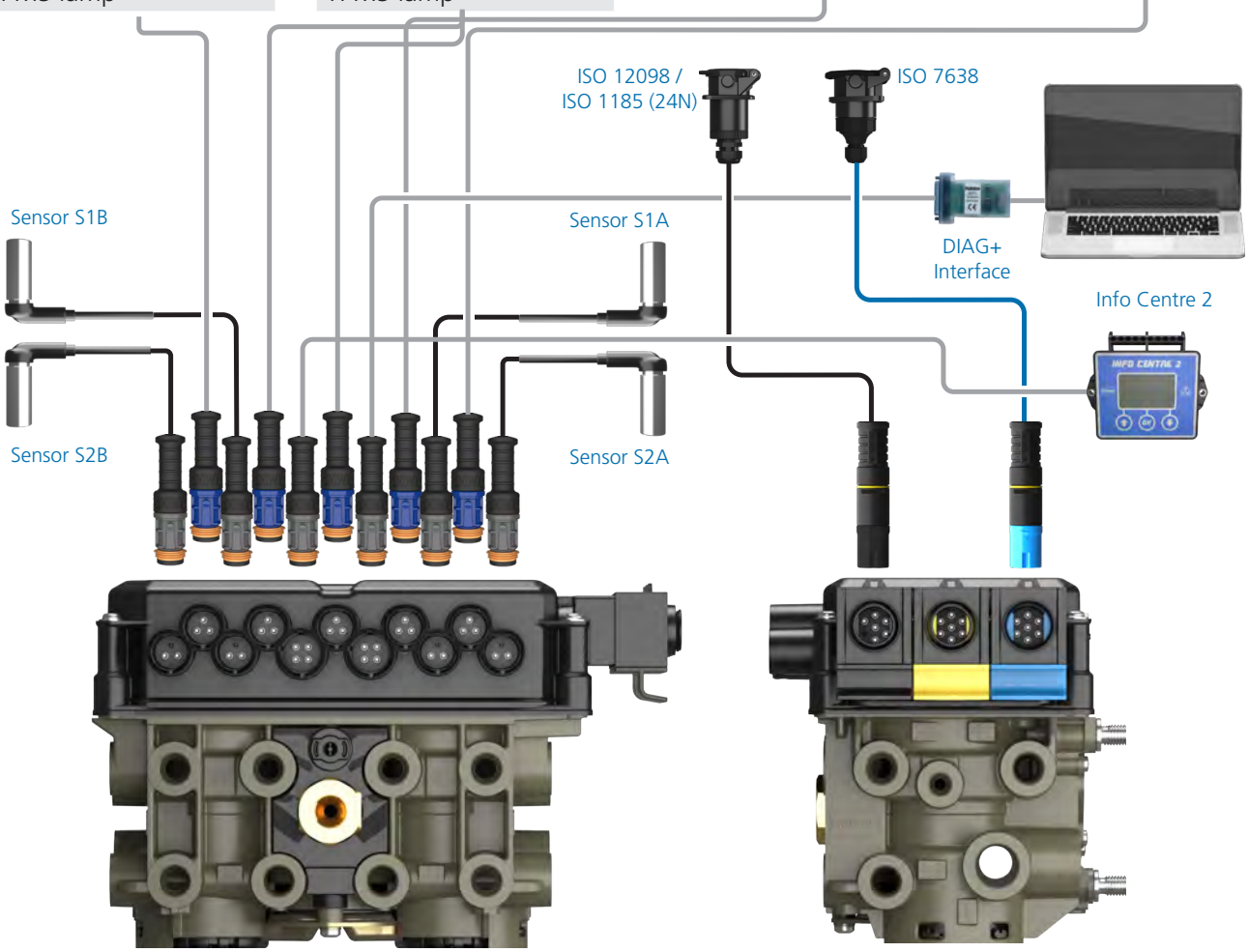

Auxiliary operation

Auxiliary functions are dependant on the installed EBS product.

Gen3	STD	S AUX	P AUX
823 008 xxx	✔	✔	
823 034 xxx	✔	✔	✔

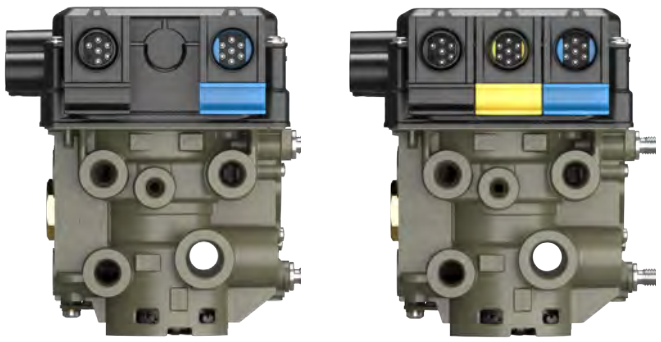

Standard AUX (STD)

Connections: 3 outputs + 2 inputs. EB+ includes by default 5 auxiliary ports for various surrounding functions. 3 of these auxiliaries are digital, 2 are analogue inputs. These amount of inputs and outputs are sufficient for most commonly used standard trailer applications. For example ILAS®-E (= lift axle control) and COLAS® (= return to ride height) digital AUX are required, whereas for LWI (= lining wear indicator) and Soft Docking (= ramp approach system) analogue inputs are needed. In case of malfunction (short circuit / open circuit) the EB+ system generates a DTC code and the service lamp will be triggered after start up.

The Standard AUX has 5 x AUX connectors that can be configured using DIAG+.
AUX 1 - B+ voltage switched output
AUX 2 - B+ voltage switched output and monitor input
AUX 3 - B+ voltage switched output and monitor input
AUX 4 - analogue input
AUX 5 - analogue input

Programming Standard AUX using DIAG+ V6

The AUX configuration screen shows the various auxiliary connections that can be used.
AUX 1
AUX 2 red only
AUX 3 red only
AUX 4
AUX 5

Clicking on the drop down arrow displays a list of options that can be selected on that auxiliary.

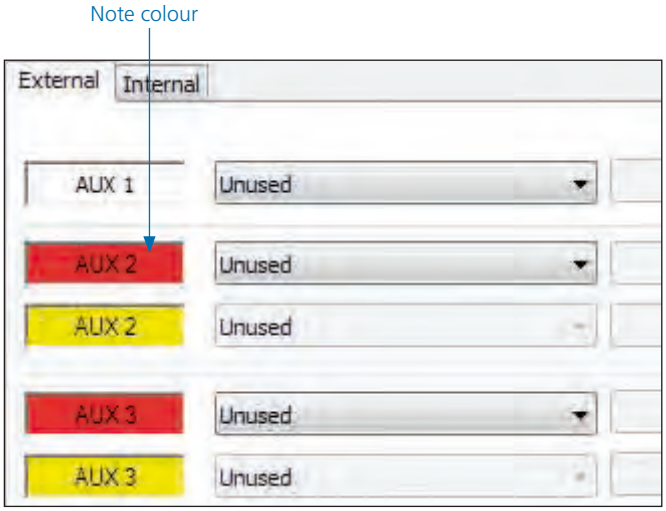

Error message: an error message will be displayed if an auxiliary configuration is created and sent to an ECU that does not support that function.

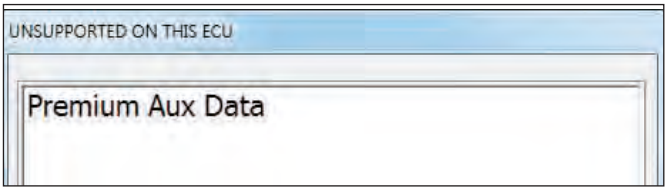

Super AUX (S AUX)

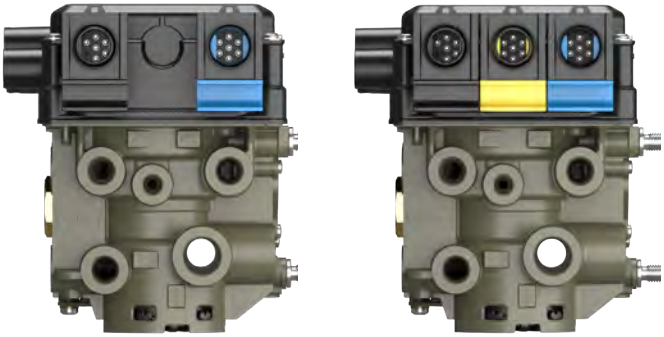

The Super AUX connection was developed as there are a number of applications where trigger signals from the truck and trailer are required.

Connections via Power B (black connector)

› 1 x 24N power supply (2 pins)

› 3 x inputs (i.e. A, B and C) and 24 V signal (4 pins)

Already with EB+ Gen1 Haldex introduced a 'Power B' socket for backup power supply by stop light ISO 12098 / ISO1185 (24N). This link to the lighting system has been extended by the introduction of the 'Super AUX'. The connector includes an additional three digital inputs and 24 V signal supply (only use the 24 V signal supply for the Super AUX control switches). The control inputs can be linked to any auxiliary feature and this allows very sophisticated applications to be realised in a very simple manner. Some examples for controllable auxiliary features are 'traction support' and / or 'steer axle lock' and / or 'EBD' (=Electric Brake Demand). Backup power is always available by default.

Auxiliary connection cables: to use the full auxiliary functionality of "Super AUX", the following cable can be used.

814 002 3xx series

Programming Super AUX using DIAG+ V6
The "AUX configuration" screen shows the various auxiliary connections that can be used.

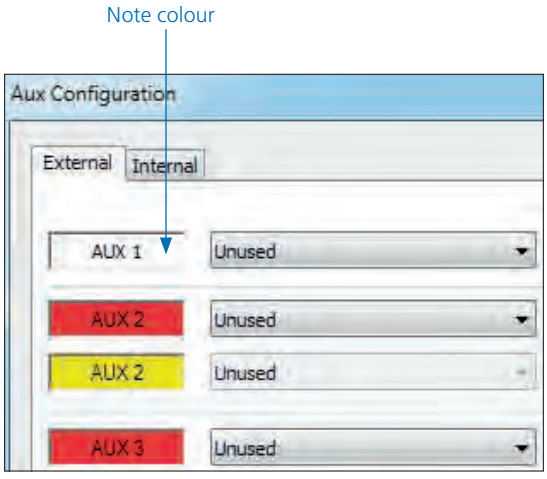

AUX 1
AUX 2 Red only
AUX 3 Red only
AUX 4
AUX 5
Super AUX

Clicking on the drop down arrow displays a list of options that can be selected on that auxiliary.

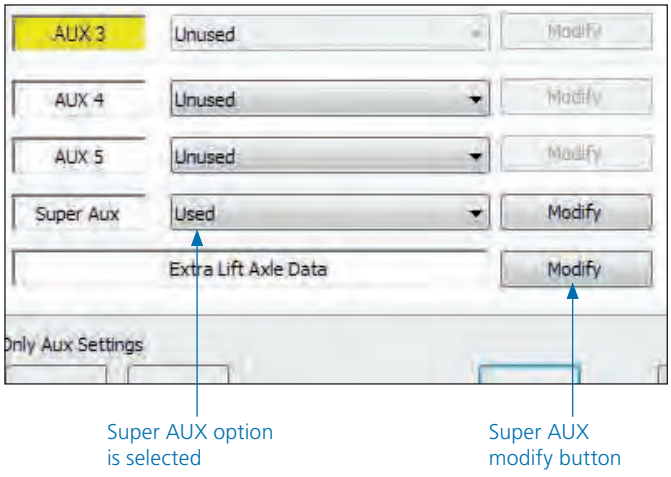

Configuring Super AUX

Click on the Modify button to configure the Super AUX inputs.

Custom Super AUX input screen

Inputs A, B and C can now be configured using the drop down boxes.

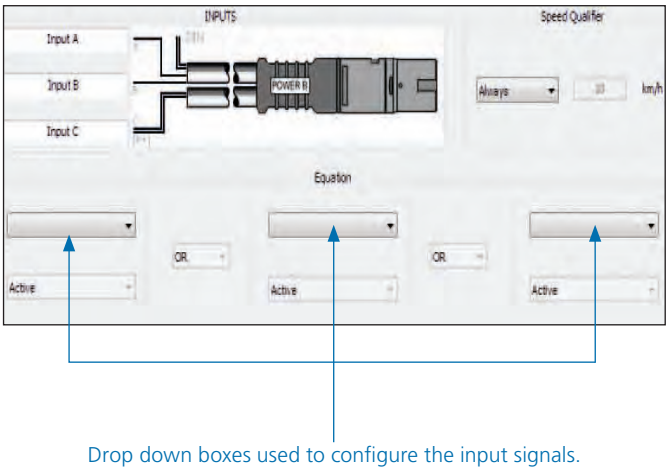

Drop down boxes used to configure the input signals.

Inputs A, B and C can also be renamed to there intended activation input (e.g. door).

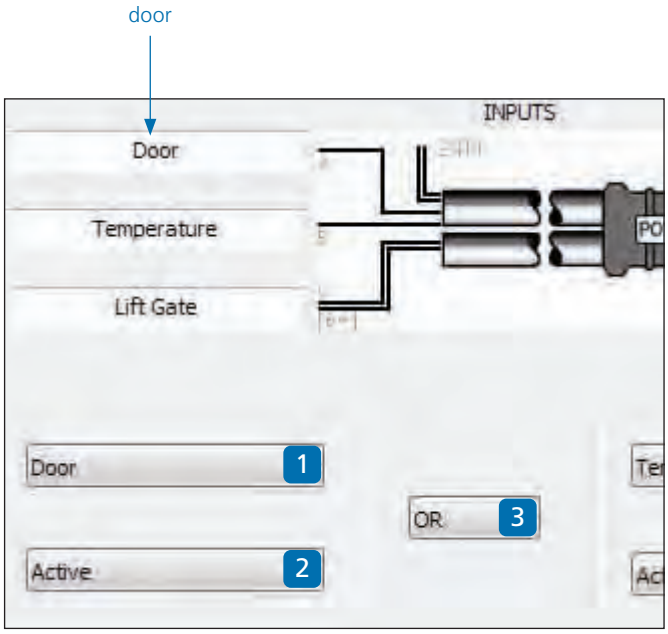

The required input combination can be achieved by using the drop down boxes for:

1. The input signal (e.g. door)
2. The activation level (i.e. high or low)
3. The action (i.e OR & AND).

A combined summary input statement is shown in the window at the bottom of the screen.

Summary statement

Speed qualifier
A speed signal can also be added to the final 'input statement' by using the 'speed qualifier' drop down box options.

Always	No speed signal referenced
<=	Less than and equal to selected km / h
>	Greater than selected km / h

Click on the button to cancel with no modifications.

Click on the button to exit and keep the modifications.

Premium AUX (P AUX)

Premium AUX allows the user to program two totally independent outputs on both AUX 2 and AUX 3. It is only available with the Premium ECU (as shown).

The Premium system provides five instead of three outputs (AUX 2 and 3 are capable to operate two separate functions). An example for an extended application could be ILAS®-E front including TA+ on AUX 2, steer axle lock on AUX 3 and COLAS® RtR on AUX 1. The twin outputs of AUX 2 and AUX 3 are colour coded red and yellow within the DIAG+ software. These colours then match the twin identifiers of the cables below.

Auxiliary connection cables
To use the full auxiliary twin functionality of the "Premium AUX" product, the following cables can be used.

814 028 xxx series
814 012 2xx series
814 039 001

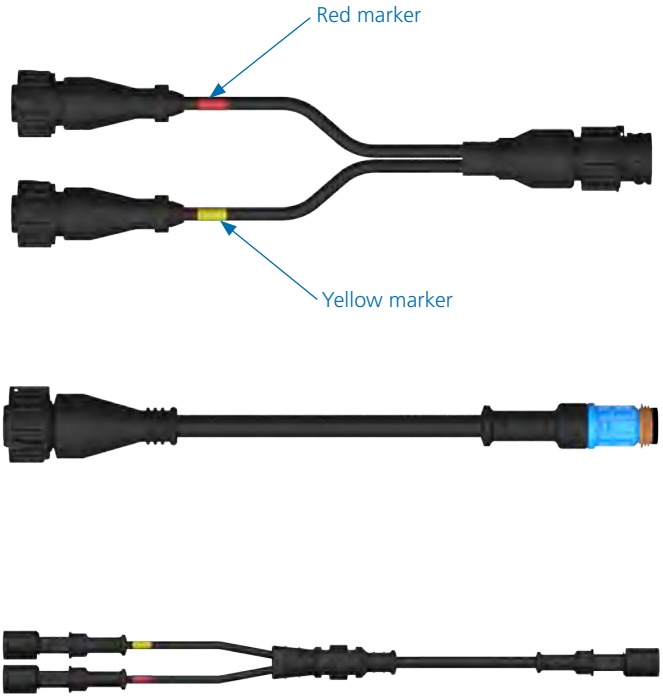

Programming Premium AUX using DIAG+ V6

Programming of AUX 2 and AUX 3 on Premium AUX is only possible using DIAG+ V6 or later.

The 'AUX configuration' screen shows the various auxiliary connections that can be used.

AUX 1
AUX 2 Red
AUX 2 Yellow
AUX 3 Red
AUX 3 Yellow
AUX 4
AUX 5
Super AUX

Clicking on the drop down arrow displays a list of options that can be selected on that auxiliary.

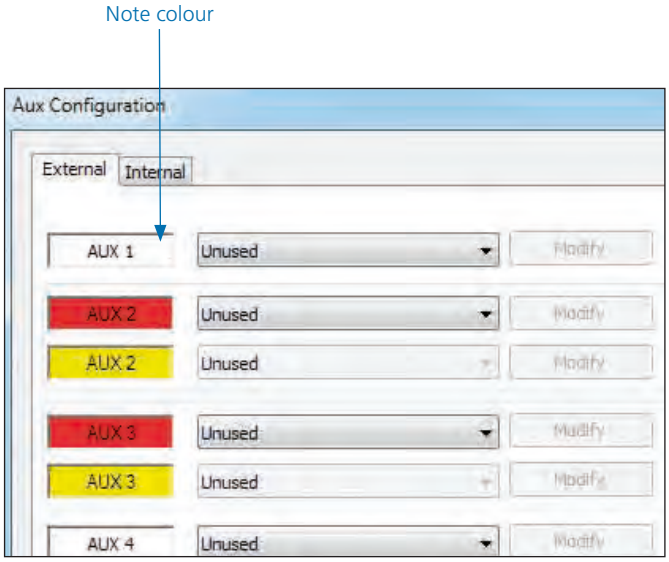

Premium AUX example

AUX 2 (red AUX) COLAS®
AUX 2 (yellow AUX) ILAS®-E front
AUX 3 (red AUX) Service lamp
AUX 3 (yellow AUX) Stability lamp

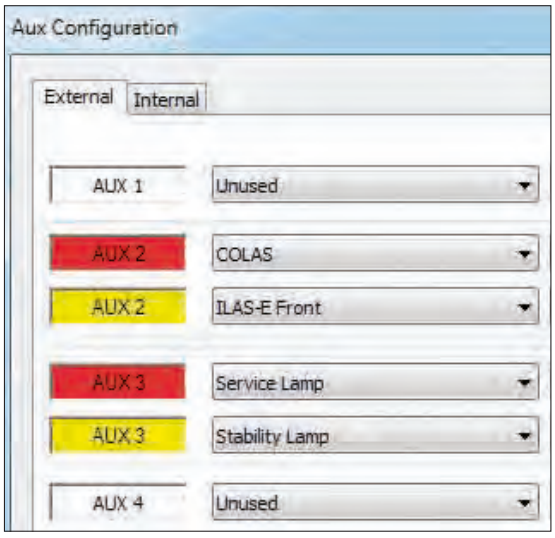

Wiring diagram - Gen3 2M

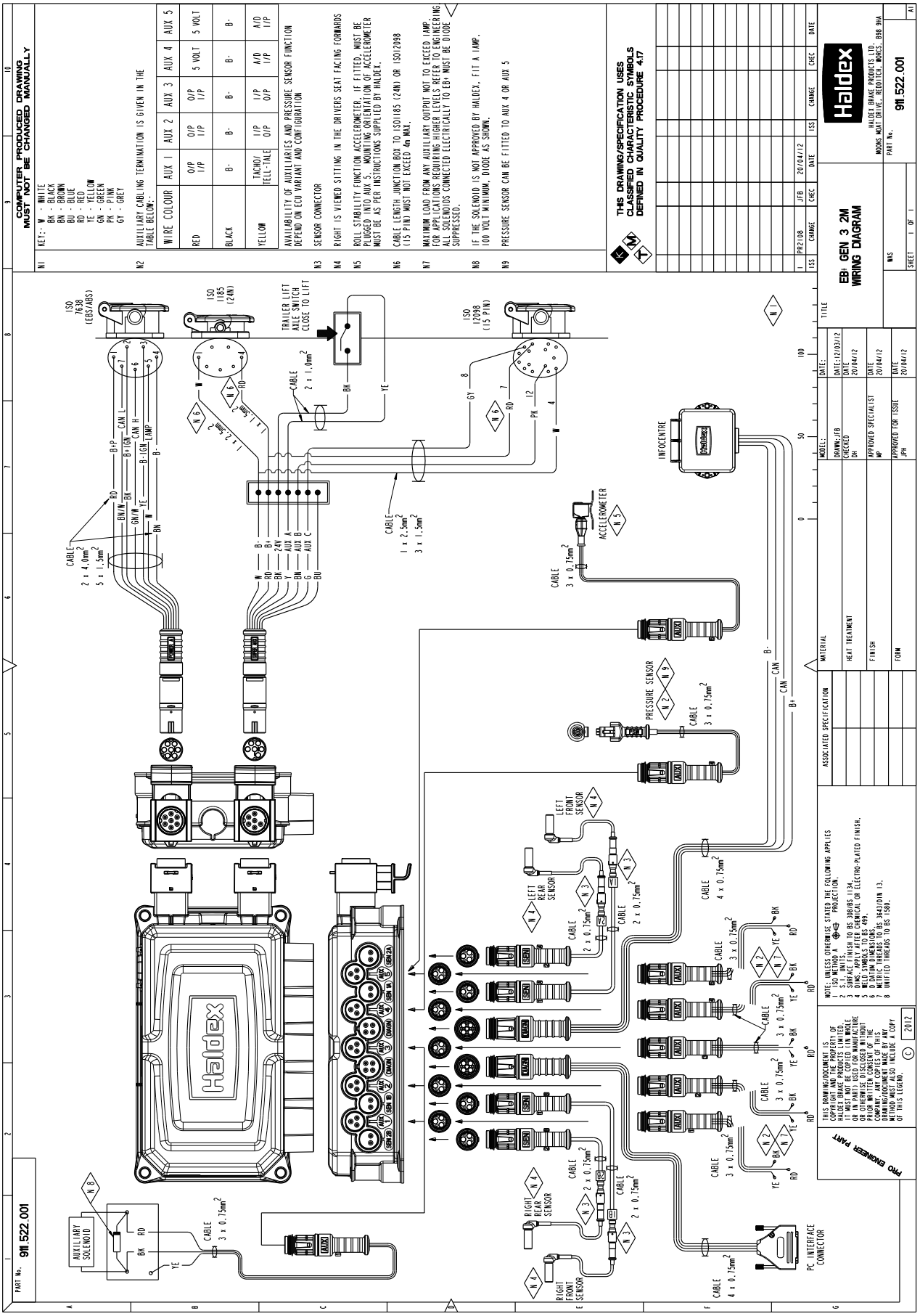

Wiring diagram - Gen3 3M

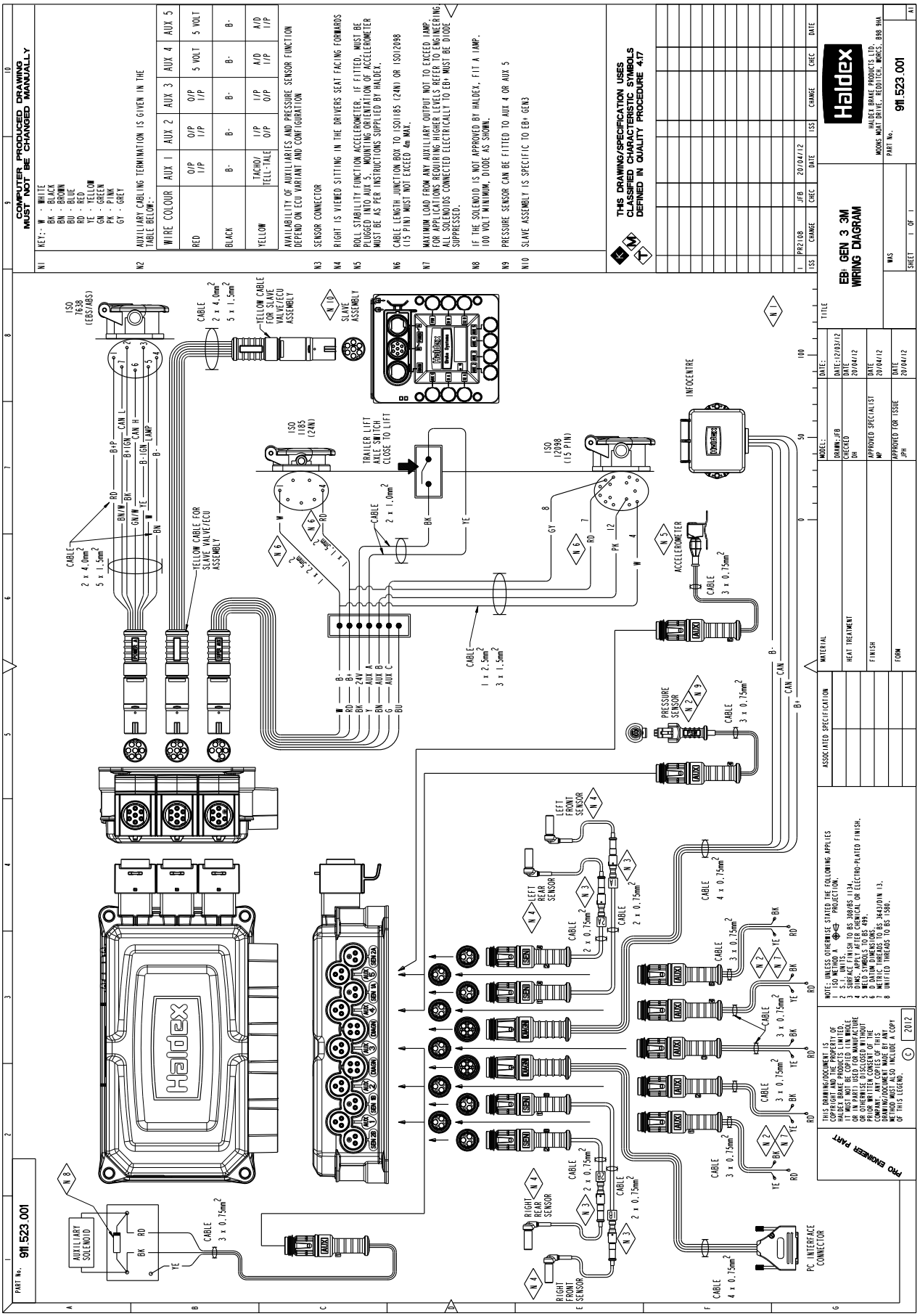

System drawing layout - COLAS®

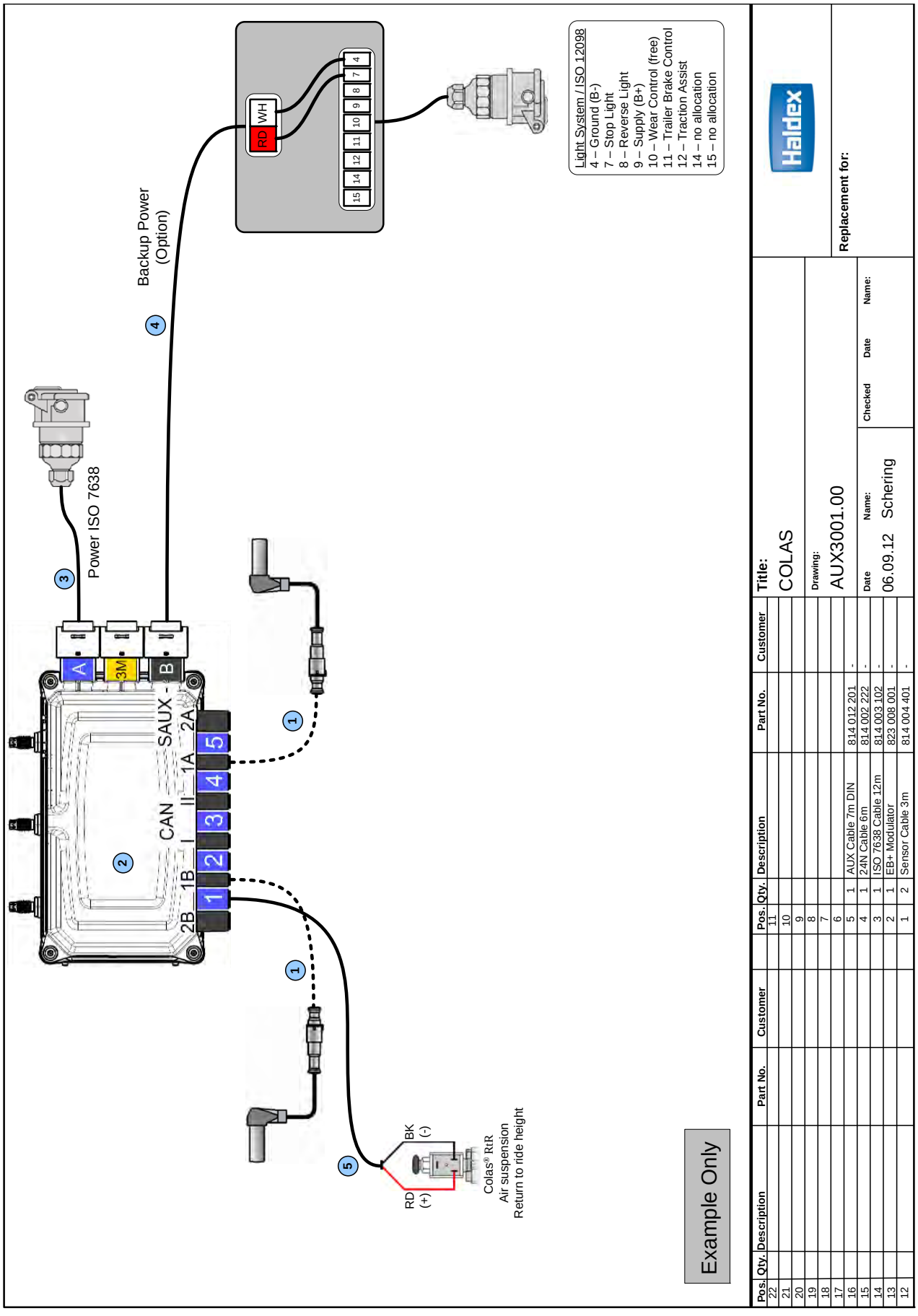

Pos.	Qty.	Description	Part No.	Customer
22				
21				
20				
19				
18				
17				
16	1	AUX Cable 7m DIN	814 012 201	-
15	1	24N Cable 6m	814 002 222	-
14	1	ISO 7638 Cable 12m	814 003 102	-
13	1	EB+ Modulator	823 008 001	-
12	2	Sensor Cable 3m	814 004 401	-

Pos.	Qty.	Description	Part No.	Customer
11				
10				
9				
8				
7				
6				
5	1	AUX Cable 7m DIN	814 012 201	-
4	1	24N Cable 6m	814 002 222	-
3	1	ISO 7638 Cable 12m	814 003 102	-
2	1	EB+ Modulator	823 008 001	-
1	2	Sensor Cable 3m	814 004 401	-

System drawing layout - ILAS®-E front

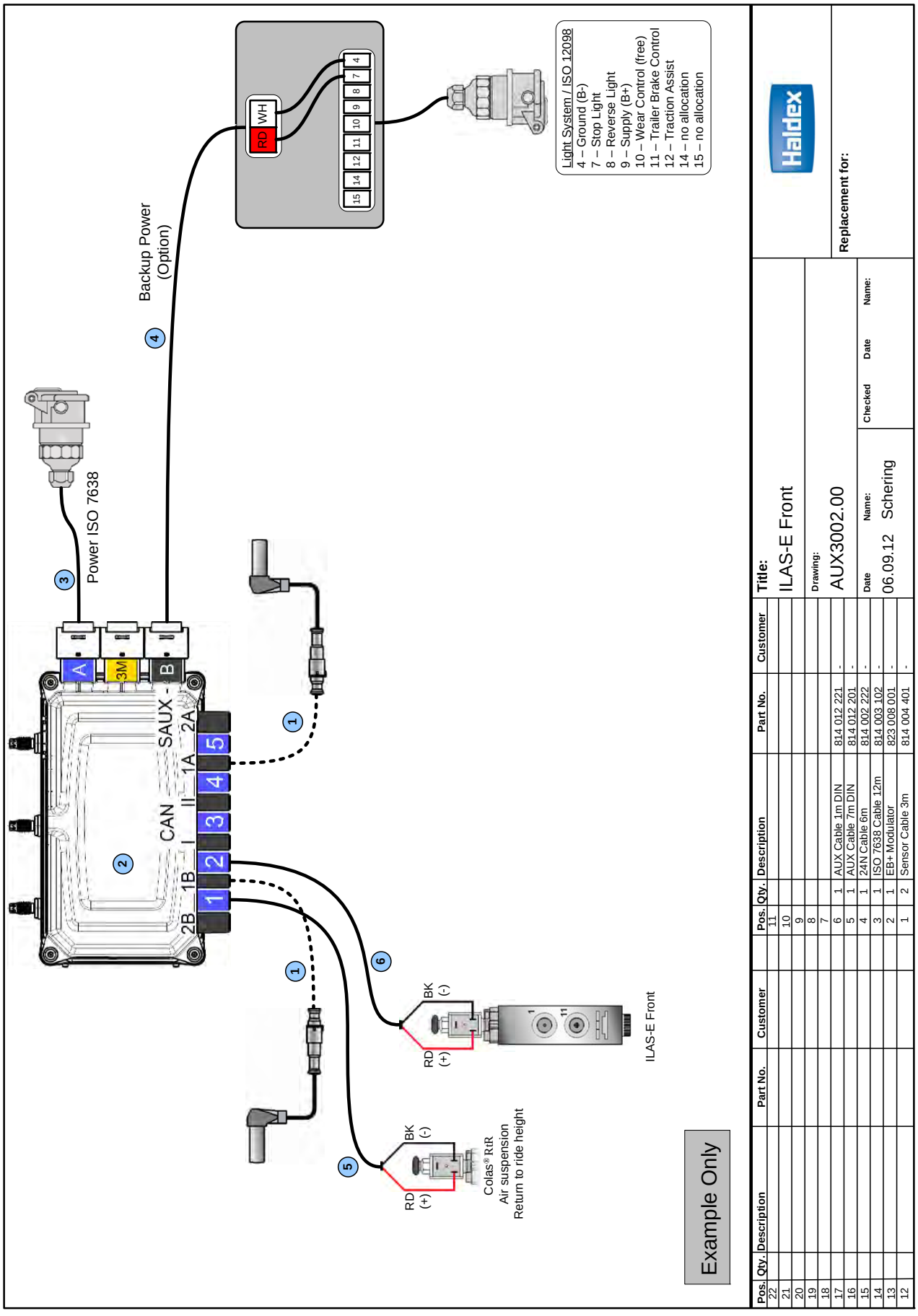

Pos.	Qty.	Description	Part No.	Customer
22				
21				
20				
19				
18				
17				
16				
15				
14				
13				
12				

Pos.	Qty.	Description	Part No.	Customer
11				
10				
9				
8				
7				
6	1	AUX Cable 1m DIN	814 012 221	-
5	1	AUX Cable 7m DIN	814 012 201	-
4	1	24N Cable 6m	814 002 222	-
3	1	ISO 7638 Cable 12m	814 003 102	-
2	1	EB+ Modulator	823 008 001	-
1	2	Sensor Cable 3m	814 004 401	-

System drawing layout - ILAS®-E front

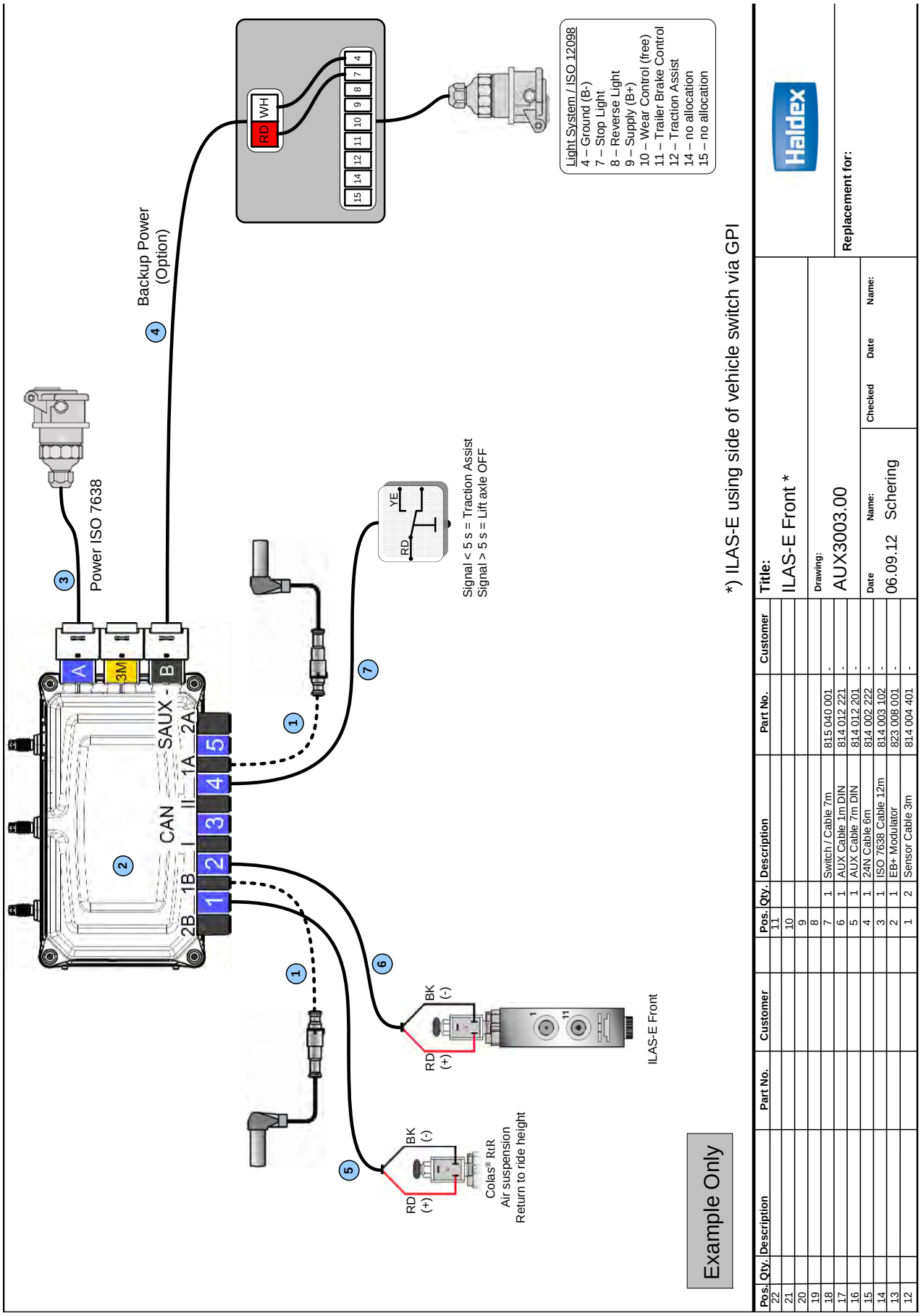

Pos.	Qty.	Description	Part No.	Customer
22				
21				
20				
19				
18				
17				
16				
15				
14				
13				
12				

Pos.	Qty.	Description	Part No.	Customer
11				
10				
9				
8				
7	1	Switch / Cable 7m	815 040 001	-
6	1	AUX Cable 1m DIN	814 012 221	-
5	1	AUX Cable 7m DIN	814 012 201	-
4	1	24N Cable 6m	814 002 222	-
3	1	ISO 7638 Cable 12m	814 003 102	-
2	1	EB+ Modulator	823 008 001	-
1	2	Sensor Cable 3m	814 004 401	-

Title: ILAS-E Front *

Drawing: AUX3003.00

Date: 06.09.12 Name: Schering

Checked Date Name:

Replacement for:

System drawing layout - ILAS®-E front

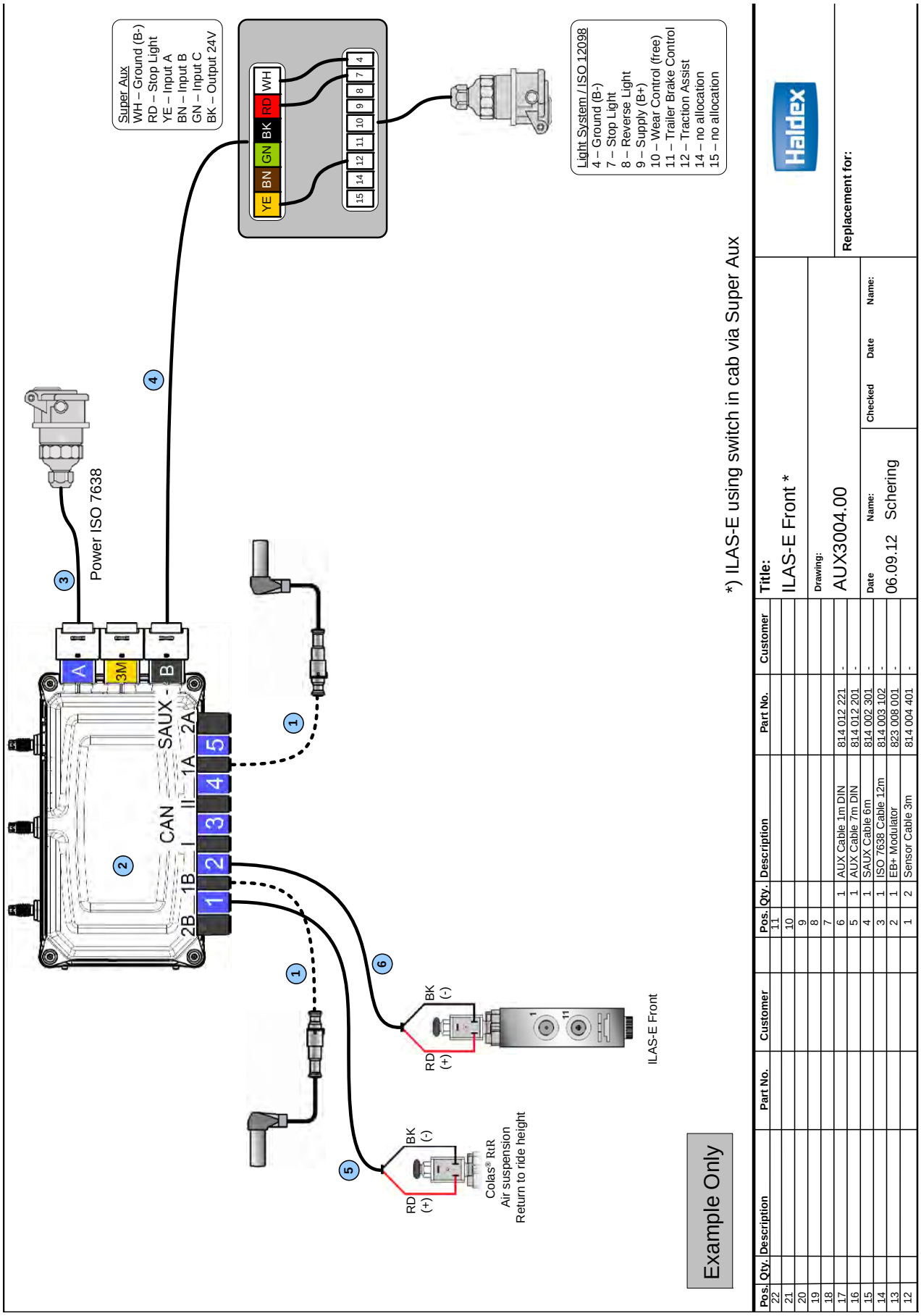

Pos.	Qty.	Description	Part No.	Customer
22				
21				
20				
19				
18				
17	1	AUX Cable 1m DIN	814 012 221	-
16	1	AUX Cable 7m DIN	814 012 201	-
15	1	SAUX Cable 6m	814 002 301	-
14	1	ISO 7638 Cable 12m	814 003 102	-
13	1	EB+ Modulator	823 008 001	-
12	2	Sensor Cable 3m	814 004 401	-

Pos.	Qty.	Description	Part No.	Customer
11				
10				
9				
8				
7				
6	1	AUX Cable 1m DIN	814 012 221	-
5	1	AUX Cable 7m DIN	814 012 201	-
4	1	SAUX Cable 6m	814 002 301	-
3	1	ISO 7638 Cable 12m	814 003 102	-
2	1	EB+ Modulator	823 008 001	-
1	2	Sensor Cable 3m	814 004 401	-

Title: ILAS-E Front *

Drawing: AUX3004.00

Date: 06.09.12 Name: Schering

Checked Date Name:

Replacement for:

System drawing layout - ILAS®-E front

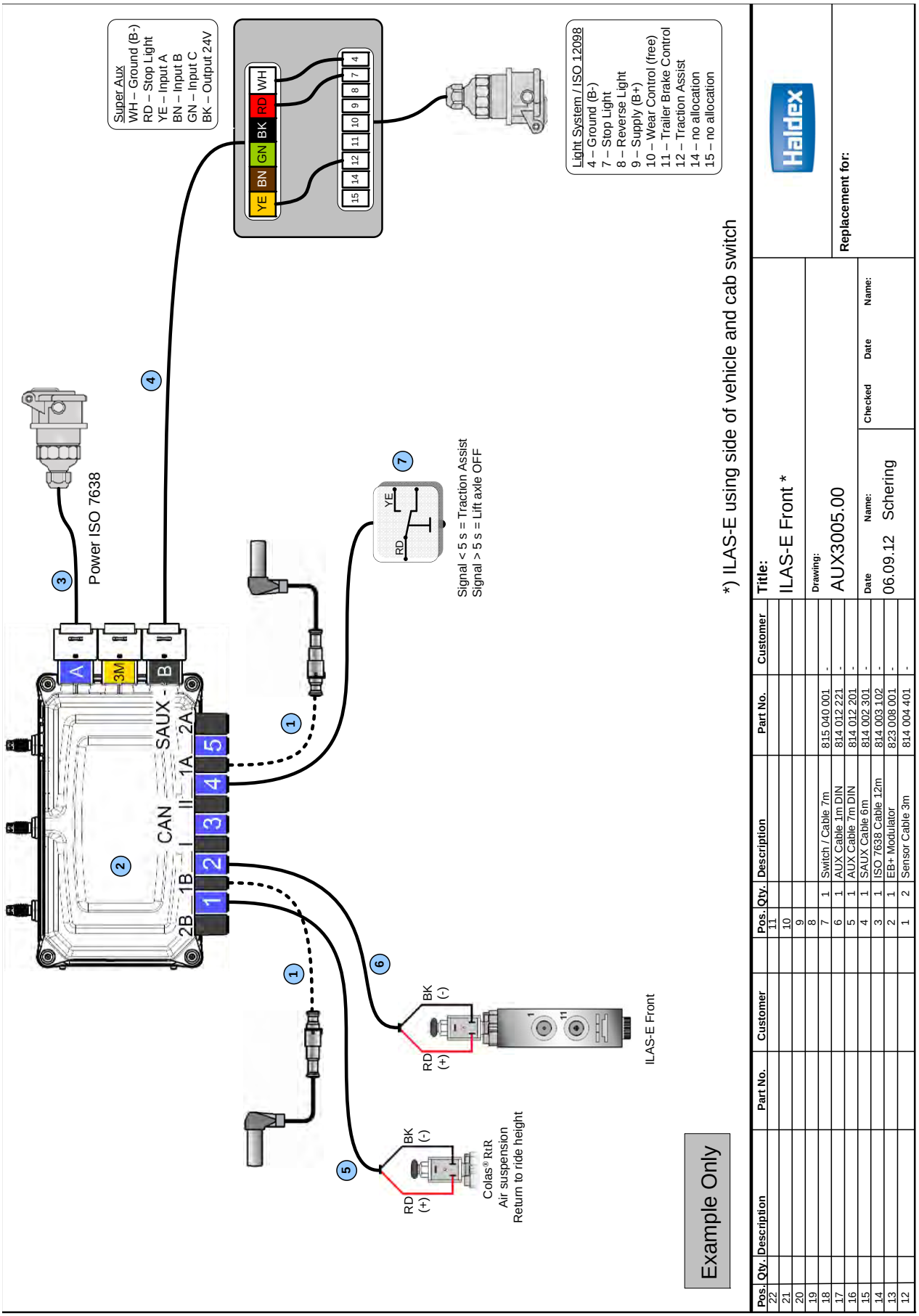

Pos.	Qty.	Description	Part No.	Customer
22				
21				
20				
19				
18				
17				
16				
15				
14				
13				
12				

Pos.	Qty.	Description	Part No.	Customer
11				
10				
9				
8				
7	1	Switch / Cable 7m	815 040 001	-
6	1	AUX Cable 1m DIN	814 012 221	-
5	1	AUX Cable 7m DIN	814 012 201	-
4	1	SAUX Cable 6m	814 002 301	-
3	1	ISO 7638 Cable 12m	814 003 102	-
2	1	EB+ Modulator	823 008 001	-
1	2	Sensor Cable 3m	814 004 401	-

Title: ILAS-E Front *

Drawing: AUX3005.00

Date Name: 06.09.12 Schering

Checked Date Name:

Replacement for:

System drawing layout - steer axle lock (2S / 2M)

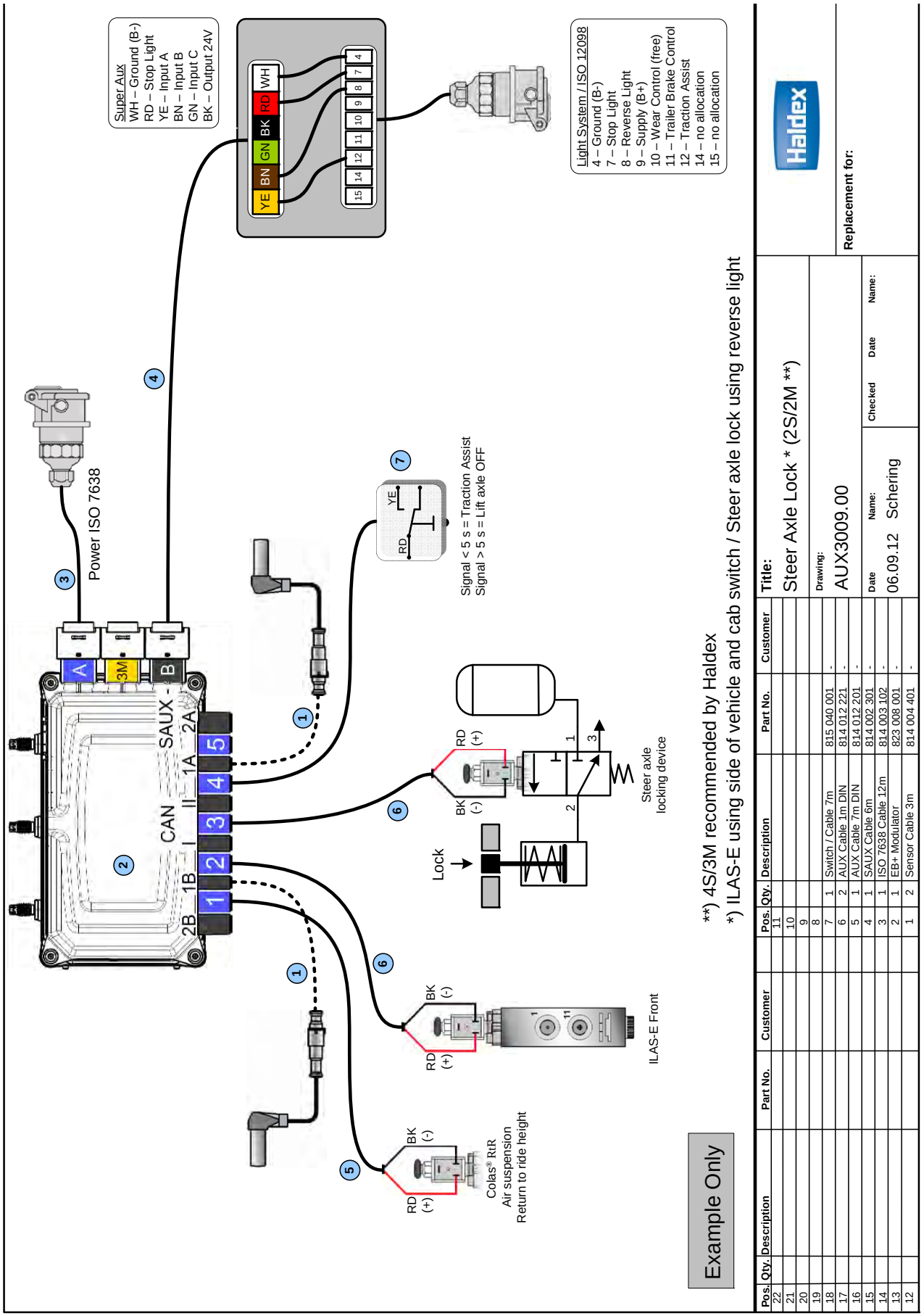

Pos.	Qty.	Description	Part No.	Customer
22				
21				
20				
19				
18				
17				
16				
15				
14				
13				
12				
11				
10				
9				
8				
7	1	Switch / Cable 7m	815 040 001	-
6	2	AUX Cable 1m DIN	814 012 221	-
5	1	AUX Cable 7m DIN	814 012 201	-
4	1	SAUX Cable 6m	814 002 301	-
3	1	ISO 7638 Cable 12m	814 003 102	-
2	1	EB+ Modulator	823 008 001	-
1	2	Sensor Cable 3m	814 004 401	-

Drawing:

Date Name: 06.09.12 Schering

Checked Date Name:

System drawing layout - steer axle lock (4S / 3M)

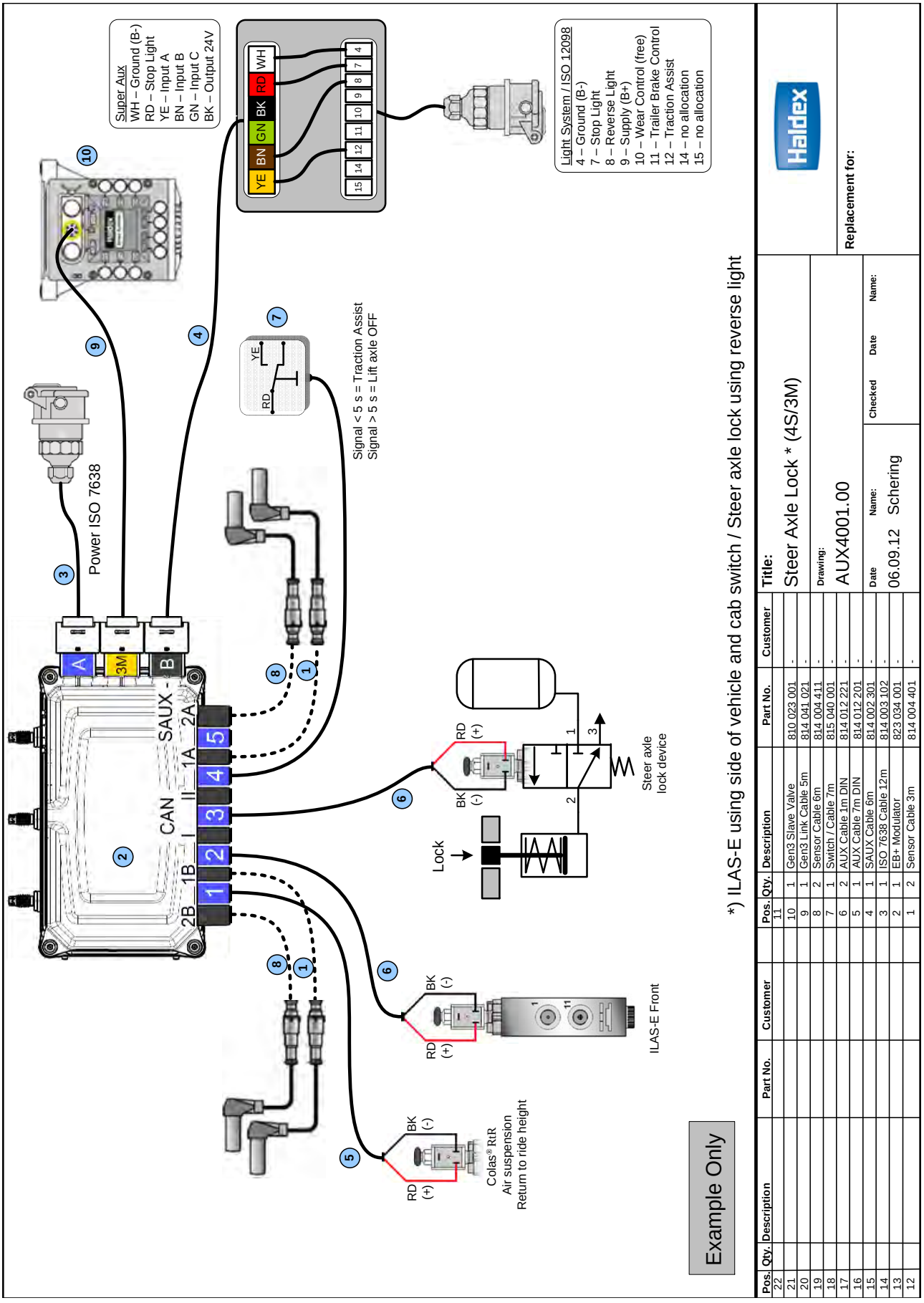

Pos.	Qty.	Description	Part No.	Customer
22				
21				
20				
19				
18				
17				
16				
15				
14				
13				
12				

Pos.	Qty.	Description	Part No.	Customer
11				
10	1	Gen3 Slave Valve	810 023 001	-
9	1	Gen3 Link Cable 5m	814 041 021	-
8	2	Sensor Cable 6m	814 004 411	-
7	1	Switch / Cable 7m	815 040 001	-
6	2	AUX Cable 1m DIN	814 012 221	-
5	1	AUX Cable 7m DIN	814 012 201	-
4	1	SAUX Cable 6m	814 002 301	-
3	1	ISO 7638 Cable 12m	814 003 102	-
2	1	EB+ Modulator	823 034 001	-
1	2	Sensor Cable 3m	814 004 401	-

Title: Steer Axle Lock * (4S/3M)

Drawing: AUX4001.00

Date 06.09.12 Name: Schering

Checked Date Name:

Replacement for:

Painting

Masked areas

In the event of paint or coating work all none used connections, pneumatic ports and exhausts must be protected. These are indicated by the yellow shaded areas as shown. Adequate protection should be used to avoid penetration of the paint or coating. All electrical ports to have connectors / blanking plugs installed. Exhaust ports and connectors / locking areas to be masked during painting.

Painting recommendations: water based, baking for 1 hour @ 100°C

Electro static painting: Haldex recommends that the EB+ Gen3 assembly is fitted to the trailer after electro static painting.

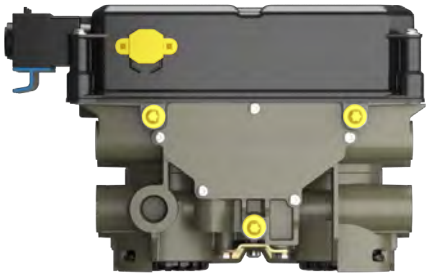

Mounting face

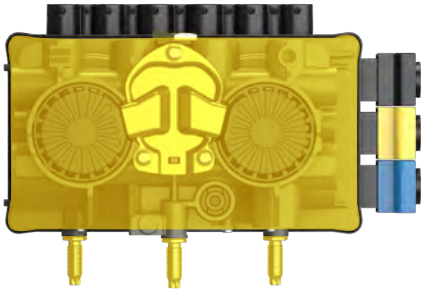

Underside

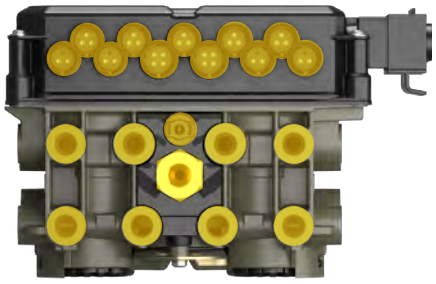

Front face

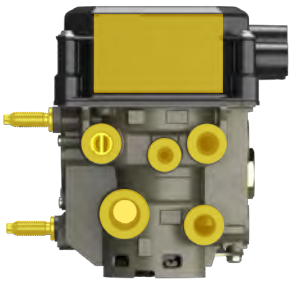

Left side

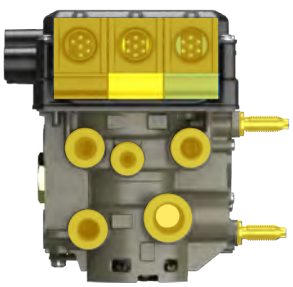

Right side

ADR Installations

Introduction

Vehicles equipped to transport hazardous goods or explosive substances are required to have electrical systems with specified levels of safety and protection. These requirements are defined in the European Agreement on international transport of dangerous goods by road (ADR).

The ADR requirements apply to the following classes of dangerous load carrying vehicles: EX / II, EX / III, FL, OX and AT.

The following key points should be observed on hazardous goods / ADR trailer installations.

ADR / GGVS: ---/----/--

Haldex	EB+ ADR TÜ.EGG.094-04			2S/2M Stability					
TRAILER MANUFACTURER FAHRZEUGHERSTELLER CONSTRUCTEUR				BRAKE CALCULATION NO. BREMSBERECHNUNGSNUMMER CALCUL DE FREINAGE NO.					
CHASSIS NUMBER FAHRGESTELLNUMMER NUMERO DE CHASSIS				TYPE TYP TYPE					
THRESHOLD PRESSURE ANSPRECHDRUCK PRESSION D'APPROCHE [bar]	0.20			PRESSURE LIMIT DRUCKBEGRENZUNG LIMITE DE PRESSION [bar]					
	UNLADEN / LEER / A VIDE			LADEN / BELADEN / EN CHARGE					
	INPUT PRESSURE EINGANGSDRUCK PRESSION D'ENTRÉE [bar]		6.50	INPUT PRESSURE EINGANGSDRUCK PRESSION D'ENTRÉE [bar]		0.70	-	-	6.50
[1.00 bar = 100 kPa]	AXLE LOAD ACHSLAST CHARGE ESSIEU [kg]	SUSPENSION PRESSURE BALGDRUCK PRESSION DE SUSPENSION [bar]	OUTPUT PRESSURE AUSGANGSDRUCK PRESSION DE SORTIE [bar]	AXLE LOAD ACHSLAST CHARGE ESSIEU [kg]	SUSPENSION PRESSURE BALGDRUCK PRESSION DE SUSPENSION [bar]	OUTPUT PRESSURE AUSGANGSDRUCK PRESSION DE SORTIE [bar]			
1 AXLE 1 ACHSE 1 ESSIEU	3000	0.70	3.00	9000	5.00	0.50	-	-	6.50
2 AXLE 2 ACHSE 2 ESSIEU	3000	0.70	3.00	9000	5.00	0.50	-	-	6.50
3 AXLE 3 ACHSE 3 ESSIEU	3000	0.70	3.00	9000	5.00	0.50	-	-	6.50

Trailer plate

The print out of the load plate from the DIAG+ program must have the ADR / GGVS certificate number as indicated.

Stop-lamp back-up power supply

The back-up power supply is connected using the ISO 12098 connector.

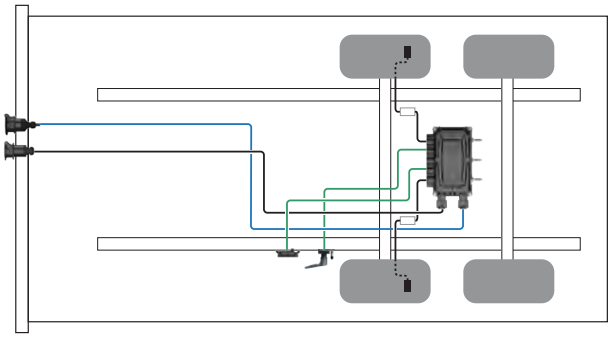

Cable routes

Sensor cable route should not be installed to brake air pipes. Do not run sensor leads in spiral wrapping on hoses. Cable should be securely fastened to prevent abrasion and positioned to protect against mechanical and thermal stress. It is recommended that the cables are run in trunking or secured at no less than 300 mm intervals.

Note:
All cables should run ‘up to’ ECU connections.

Junction box

Any wiring required to a junction box (for brake lamp power supply) must be fully approved for use on an ADR vehicle.
The cable length from the junction box to the ISO 12098 connector must not exceed 4 metres.

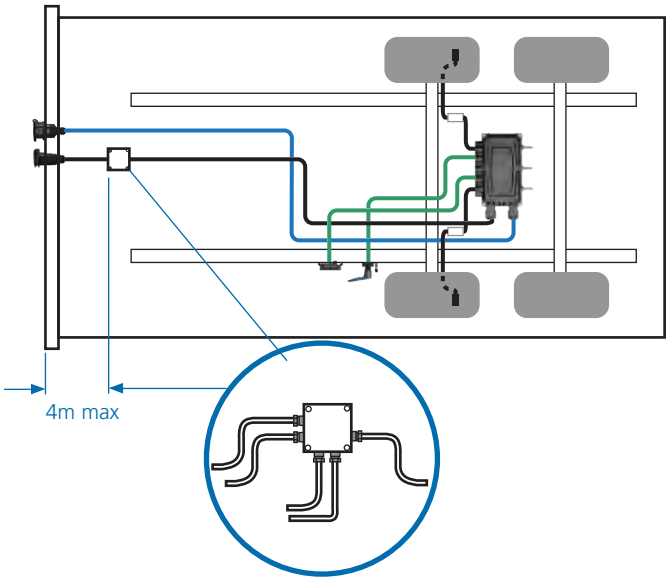

Auxiliary connections

It is the installers responsibility to ensure that with any auxiliary component fitted, the connector and cable must be sealed in accordance with ADR requirements.

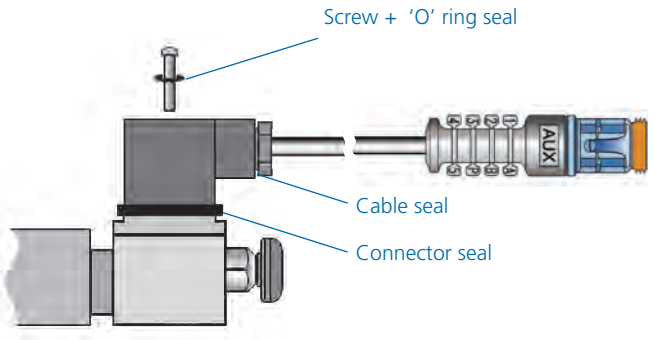

Towing vehicles

Towing vehicles in categories EX / III and FL must have a battery master switch fitted so that all electrical loads including the trailer, are connected to the non-battery side of the master switch.

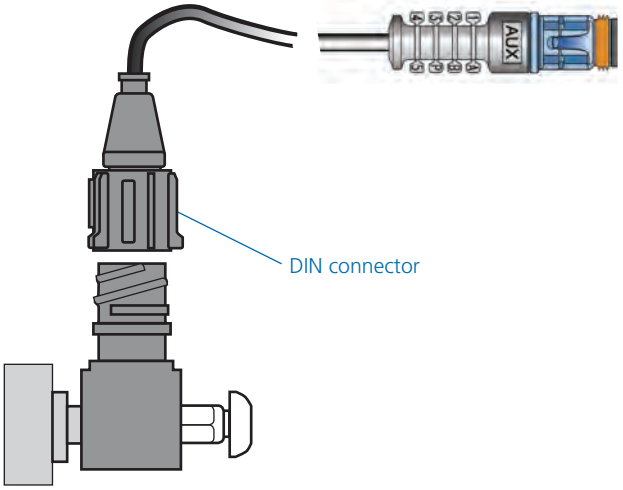

Programming

To complete the EB+ installation the ECU must be programmed using DIAG+ software version 6 or later (Refer to DIAG+ User Guide 000 300 019 for further information)

System diagnostics

An important feature of the EB+ Gen3 system is that it provides an extensive on board diagnostic capability. The system displays a range of codes, which allow rapid diagnosis of the problem should one occur. Diagnostic communication is in accordance with ISO 15765 protocol and is accessed by either the ISO 7638 7-pin connector which uses pin 6 and 7 as a CAN data bus using ISO interface assembly (815 018 001), or optional side-of-vehicle connector, or directly to ECU. Any suitable device connected to this CAN data bus may read diagnostic information.

An Info Centre 2 can be connected permanently to the ECU's diagnostic 'DIAG' connection. While the ECU is powered, information is transferred to the Info Centre's memory, which can be recalled. Power is supplied from the vehicle system via the ECU diagnostics connector.

For further information refer to the Info Centre 2 user guide (006 300 001).

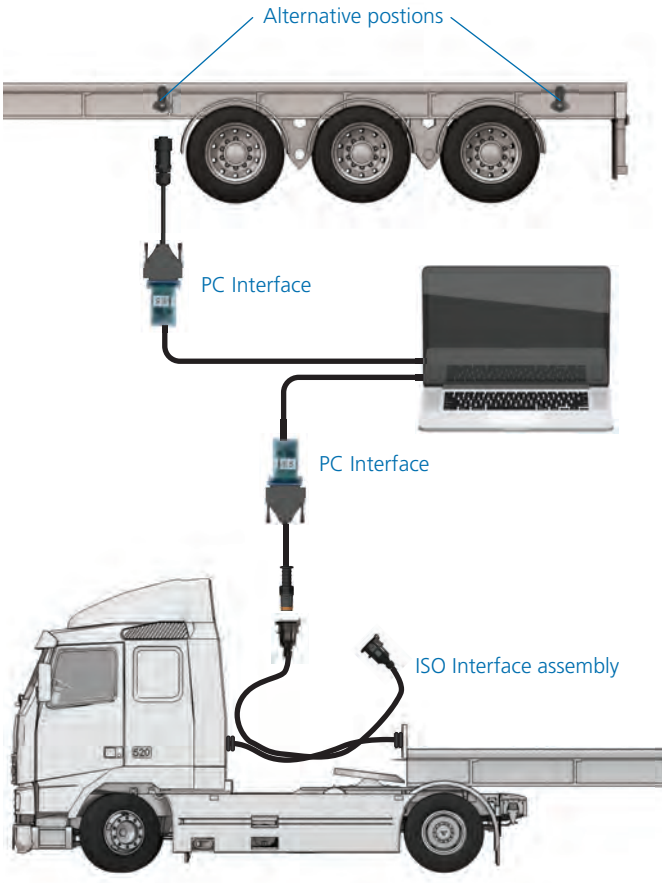

Information

- Read diagnostic trouble code (DTC)
- Clear DTC
- Configuration
- ECU software version number
- ECU serial number
- Vehicle ident number (VIN)
- Manufacturer OEM
- Info Centre 2 software version number

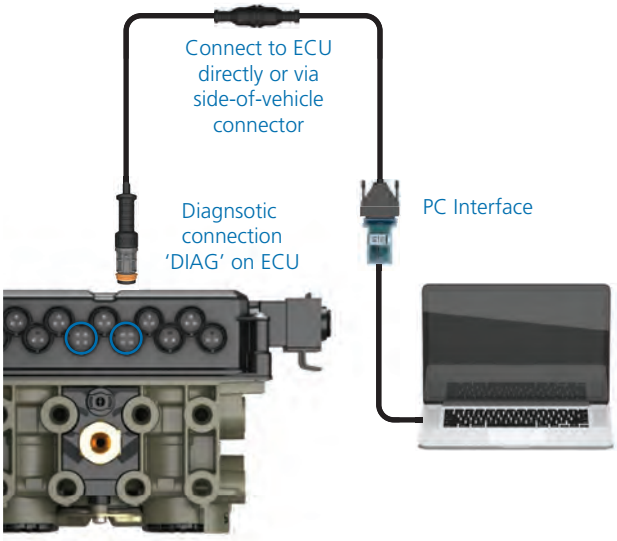

Distance

- Odometer - total distance
- Trip distance (1st and 2nd)
- Service distance
- Wheel scale factor
- Clock (time and date)
- Clear trip 1 and 2

Alternatively - directly connected to ECU or side-of-vehicle connection

Changes

› Service distance

› Service interval

› Wheel scale factor

› Clock (time and date)

› Options - on / off (parameter updating / backlight)

› Password (pin number)

› Unlock Info Centre 2 (pin number unknown)

Testing

› Load

› Wheels (sensor / cabling check)

› Pressure

› Plate (load plate data)

› Auxiliaries

› Brake test

› Lining wear indication

A Haldex pc based program DIAG+ may be used for more advanced diagnosis. This also allows configuration with system parameters to be entered and an end-of-line test to be carried out.

Warning device

The warning device function depends on the ISO 7638 power supply used:

A warning device located on the driver's console of the towing vehicle is operated from the ISO 7638 power cable only when the EB+ Gen3 is powered by the ignition switch.

If a dedicated power source is unavailable to the EB+ Gen3 from the ISO 7638 connector then system integrity will not be indicated by the cab mounted warning device.

As an option to the cab warning device a trailer mounted warning lamp may be provided as an auxiliary function. This lamp mimics the signal to the cab warning device but will only function if the ISO 7638 power is connected.

The signal produced by the trailer warning lamp may be different to that produced by the cab device due to possible modification of the cab device by the towing vehicle.

A trailer-mounted warning lamp is not allowed in some countries

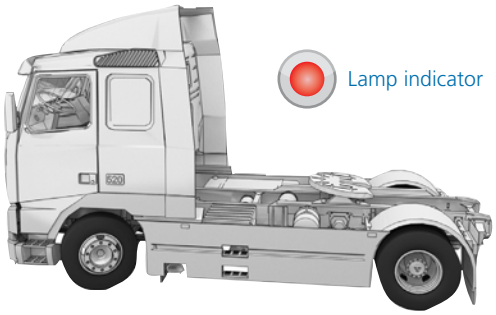

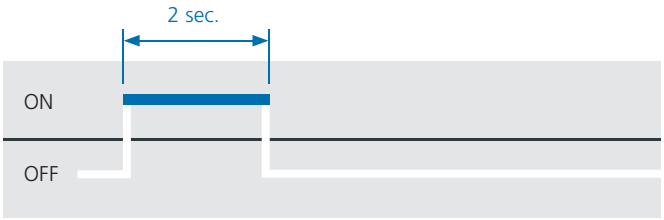

System check procedure

1. On power up of the system, the warning device must indicate one of the following sequences in order to show a fault free system:

Option 'A'

Option A	
On for 2 seconds	Warning device OK and system self-checking
Off	System self-checked (not sensors)

Option 'B'

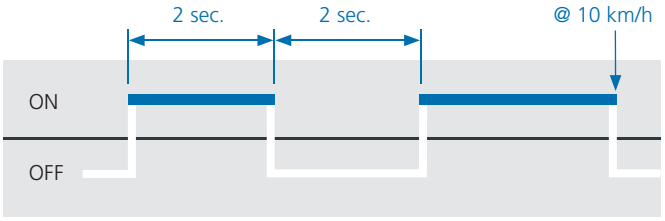

Option B	
On for 2 seconds	Warning device OK and system self-checking
Off for 2 seconds	System self-checked and preparing to check sensors
On until moving	System waiting for vehicle to move above 10 km/h in order to check that sensors are working
Off	Once the vehicle is moving above 10 km/h and the warning device clears, the electronic system is fully checked

2. During the self-check procedure, the system cycles the EPRV's. With foot brake applied one exhaust of air from each EPRV will be audible.

Once these two checks are made with correct results, no further checks are required.

If the results are not satisfactory, Haldex DIAG+ or EB+ Info Centre should be used to establish the diagnosis.

Power up modes

The EB+ Gen3 system has two power up modes to aid in system testing. With switching the Ignition 'On' (B+ applied) the following occurs:

With no yellow line pneumatic pressure (i.e. brakes 'Off').
The system adopts load sensing mode when the brakes are applied. This load sensing mode is limited to 2 minutes for any single brake application, after which it returns to a push-through condition (approx 1:1).

The push-through condition is cancelled on vehicle movement above 10 km / h returning the system to load sensing operation.

With yellow line pneumatic pressure (i.e. Brakes 'On', park on air).
Apply foot brake, switch Ignition 'On'.
The system adopts a push-through (approx 1:1) condition. When the brakes are released and re-applied the system remains in push-through unless the brakes are released for longer than 2 minutes, after which it returns to load sensing operation.

This condition is cancelled on vehicle movement above 10 km / h returning the system to load sensing operation.

Supply switch test box circuit diagram

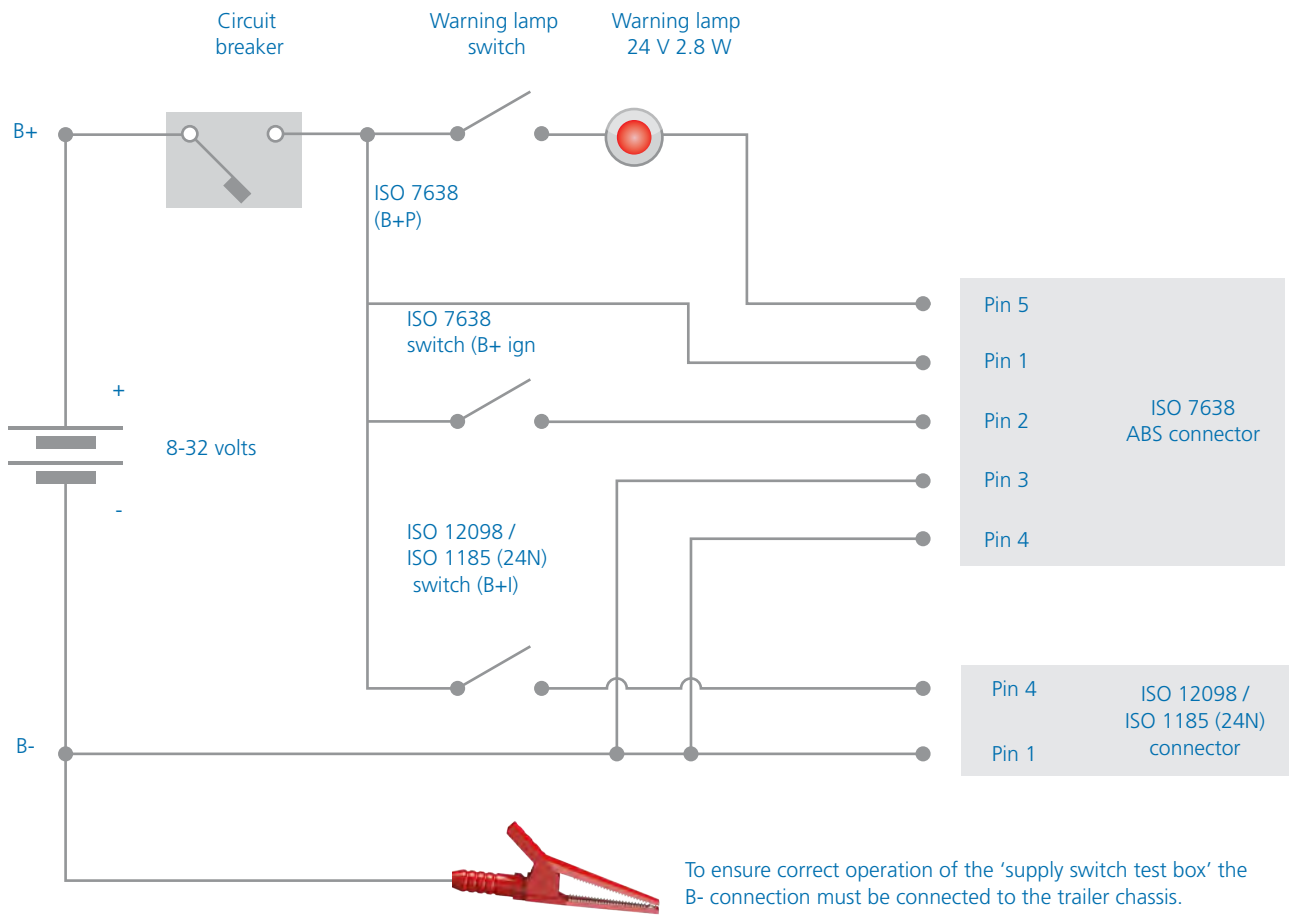

To ensure correct operation of the 'supply switch test box' the B- connection must be connected to the trailer chassis.

Mains power supply circuit diagram

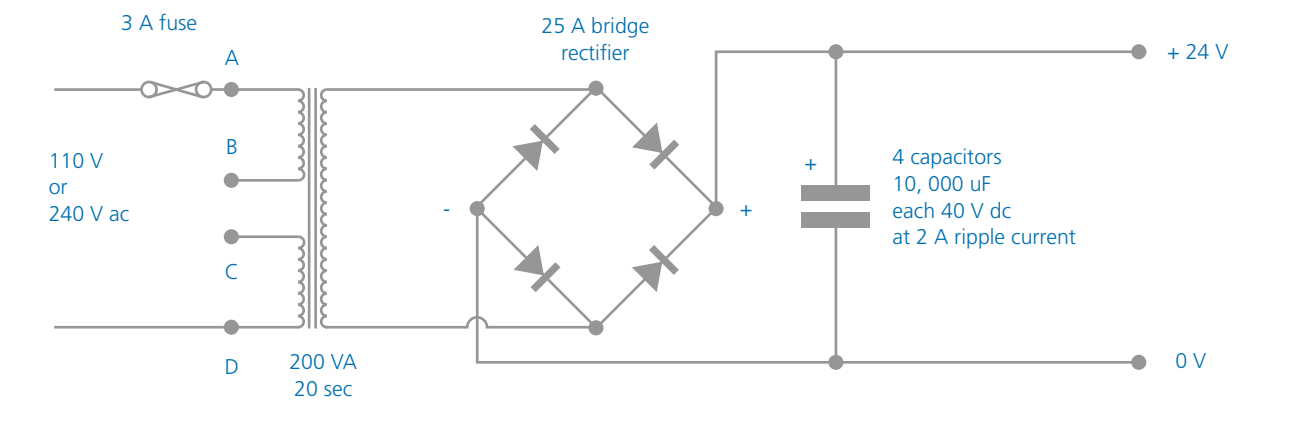

Connect A to C and B to D for 110 V operation
Connect B to C for 240 V operation

Multimeter readings

Sensor connector

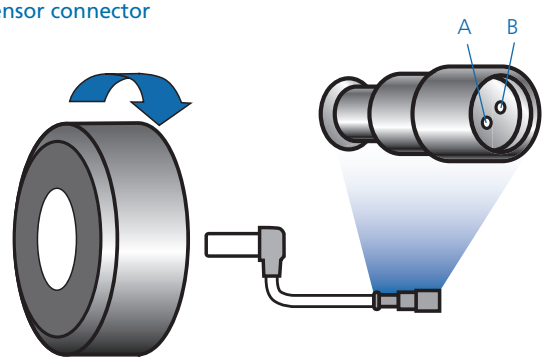

Earth continuity

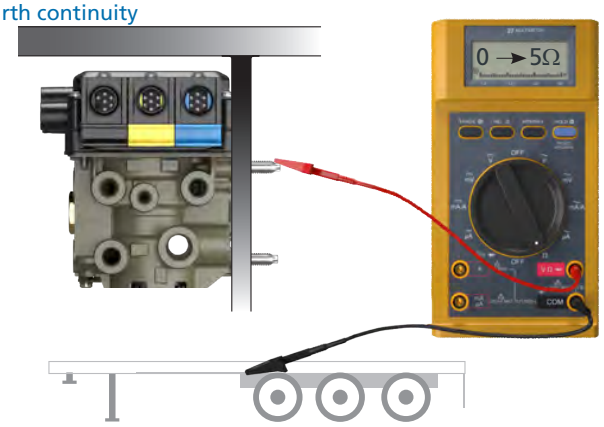

COLAS® connector

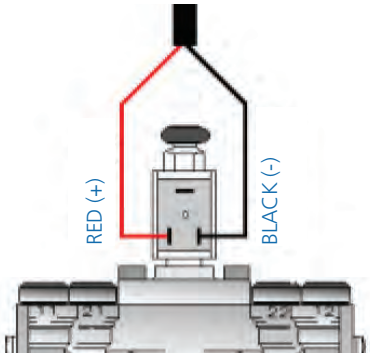

ILAS®-E connector

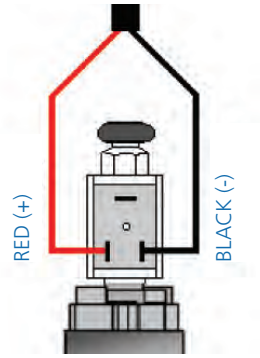

COLAS® DIN connector

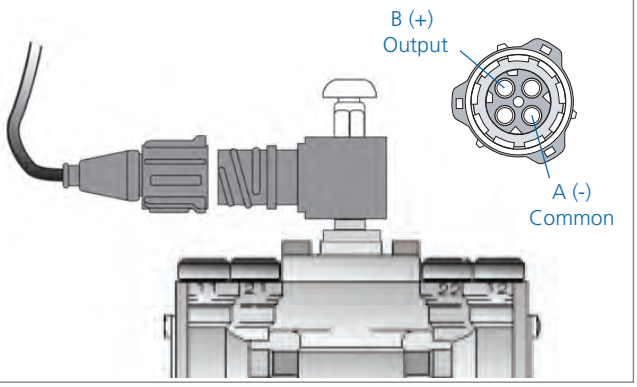

ILAS®-E Din connector

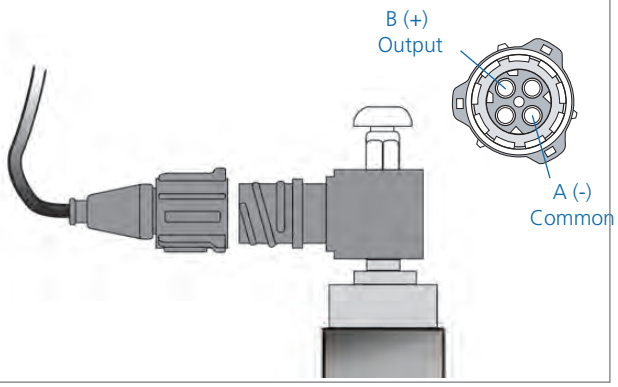

Checking position	Measure between	Correct value	Remarks
Sensor output	A B	0.2 AC Min	Sensor 1A, 1B or 2A, 2B Sensor disconnected from ECU Wheel rotated at 1 rev / 2 sec.
Sensor resistance	A B	1.0 < AB < 2.4 K Ω	Sensor 1A, 1B or 2A, 2B Sensor disconnected from ECU
Earth continuity resistance	ECU / EPRV Bracket and chassis	0 Ω 0 < R < 5 Ω	
COLAS®	+ -	180 < R < 215 Ω	Cable disconnected
ILAS®-E solenoid resistance	+ -	180 < R < 215 Ω	Cable disconnected

Diagnostic trouble codes (DTC)

If a diagnostic trouble code displayed is not listed here, check for intermittent sensor and wiring faults.

Info Centre 1 displayed DTC	Possible causes
ECU TIME OUT or NO LINK	No supply on ignition switched line.
	Truck fuse blown, EB+ Gen3 Info Centre or cable fault., open circuit B - ISO 7638 not connected
Sensor group	
S1A CONT	1A sensor / wiring open or short circuit
S1B CONT	1B sensor / wiring open or short circuit
S2A CONT	2A sensor / wiring open or short circuit
S2B CONT	2B sensor / wiring open or short circuit
Intermittent low sensor output group	
S1A SIGNAL	1A sensor signal fault
S1B SIGNAL	1B sensor signal fault
S2A SIGNAL	2A sensor signal fault
S2B SIGNAL	2B sensor signal fault
	Loose sensor, connection, bracket or exciter. Damaged exciter. Maladjusted sensor or worn sensor cable insulation.
Low sensor output group	
S1A OUTPUT	1A sensor signal fault
S1B OUTPUT	1B sensor signal fault
S2A OUTPUT	2A sensor signal fault
S2B OUTPUT	2B sensor signal fault
	Sensor worn, maladjusted sensor, wiring open or short circuit.
Reservoir pressure transducer group	
RESR SC	Reservoir pressure transducer short circuit
RESR OC	Reservoir pressure transducer open circuit
Lateral accelerometer	
LAT ACC OC	Lateral accelerometer wiring open circuit
LAT ACC SC	Lateral accelerometer wiring short circuit
LAT ACC SIGNAL	Lateral accelerometer signal fault

Info Centre 1 displayed DTC	Possible causes
EPRV 21 hold and dump solenoid group	
EPRV 21 HOLD SC	Modulator 21 hold solenoid short circuit
EPRV 21 DUMP SC	Modulator 21 dump solenoid short circuit
EPRV 21 HOLD OC	Modulator 21 hold solenoid open circuit
EPRV 21 DUMP OC	Modulator 21 dump solenoid open circuit
EPRV 21 HOLD SC DRIVE	Modulator 21 hold solenoid short circuit permanently energised
EPRV 21 DUMP SC DRIVE	Modulator 21 dump solenoid short circuit permanently energised
EPRV 21 HOLD UNSPEC	Modulator 21 hold solenoid control circuit fault
EPRV 21 DUMP UNSPEC	Modulator 21 dump solenoid control circuit fault
One wheel with slow recovery group	
EPRV 21 SLOW REC	Slow recovery of one wheel of modulator 21
EPRV 22 SLOW REC	Slow recovery of one wheel of modulator 22
	Slow brake release, foundation brake mechanical faults, dry bearings, broken spring, restricted piping. Check for kinks and blockages etc. Incorrect piping, wiring. Modulator fault. Sensor wiring crossed across an axle
EPRV 22 hold and dump solenoid group	
EPRV 22 HOLD SC	Modulator 22 hold solenoid short circuit
EPRV 22 DUMP SC	Modulator 22 dump solenoid short circuit
EPRV 22 HOLD OC	Modulator 22 hold solenoid open circuit
EPRV 22 DUMP OC	Modulator 22 dump solenoid open circuit
EPRV 22 HOLD SC DRIVE	Modulator 22 hold solenoid short circuit permanently energised
EPRV 22 DUMP SC DRIVE	Modulator 22 dump solenoid short circuit permanently energised
EPRV 22 HOLD UNSPEC	Modulator 22 hold solenoid control circuit fault
EPRV 22 DUMP UNSPEC	Modulator 22 dump solenoid control circuit fault

Info Centre 1 displayed DTC	Possible causes
Delivery pressure transducer group	
EPRV 21 DEL SC	Modulator 21 delivery pressure transducer short circuit
EPRV 21 DEL OC	Modulator 21 delivery pressure transducer open circuit
EPRV 22 DEL SC	Modulator 22 delivery pressure transducer short circuit
EPRV 22 DEL OC	Modulator 22 delivery pressure transducer open circuit
Demand pressure transducer group	
DEMAND SC	Service line pressure transducer short circuit
DEMAND OC	Service line pressure transducer open circuit
Suspension pressure transducer group	
SUSP SC	Suspension pressure transducer short circuit
SUSP OC	Suspension pressure transducer open circuit
SUSP OUT OF RANGE	Suspension pressure values outside operating range
Pressure switch group	
REV SWITCH SC	Relay emergency valve pressure switch short circuit
REV SWITCH OC	Relay emergency valve pressure switch open circuit
REV SWITCH PNEUMATIC	Relay emergency valve pressure switch pneumatic fault
REV SWITCH SIGNAL	Relay emergency valve pressure switch failed to activate
Supply voltage group	
PWR ISO 7638 FAIL	Power loss on pin 1 or 2 (ISO 7638)
PWR LO VOLT	Supply voltage at ECU less than 8 V when brake apply solenoid energised
PWR HI VOLT	Supply voltage at the ECU greater than 32 V
PWR UNSPEC	Internal ECU fault
Lining wear group	
BRAKE PADS	Lining wear wiring open circuit
Brake apply solenoid group	
BRK APPLY SC	Brake apply solenoid short circuit
BRK APPLY OC	Brake apply solenoid open circuit
BRK APPLY SC DRIVE	Brake apply solenoid short circuit permanently energised
BRK APPLY UNSPEC	Brake apply solenoid short circuit

Info Centre 1 displayed DTC	Possible causes
Auxiliary components group	
AUX1	Auxiliary 1 system / wiring open or short circuit
AUX2	Auxiliary 2 system / wiring open or short circuit
AUX3	Auxiliary 3 system / wiring open or short circuit
AUX4	Auxiliary 4 system / wiring open or short circuit
AUX5	Auxiliary 5 system / wiring open or short circuit
Slave valve group	
SLAVE VALVE SENSOR	Pressure transducers open or short circuit
SLAVE VALVE MODULATOR	Hold, dump or brake apply solenoid open or short circuit
SLAVE VALVE CABLE	Link cable open or short circuit
SLAVE VALVE SLOW REC	Slow recovery of one wheel slave valve
SLAVE SUSP LOW	Suspension pressure values outside operating range
ISO 11992 (CAN) electrical signal group	
PNEUMATIC DEMAND LOSS	No corresponding pneumatic demand pressure
TOWED CAN DEMAND LOSS	CAN line (pin 6 and 7 on ISO 7638) fault
TOWED CAN CONTROL LOSS	CAN line (pin 6 and 7 on ISO 7638) data fault
ECU group	
ECU EE ERR	Internal ECU fault or ECU not programmed
ECU PARAM ERR	Internal ECU fault or ECU not programmed
ECU EE UNSPEC	Internal ECU fault or ECU not programmed

Note:
If a DTC is displayed and after following recommended procedure, as detailed in the service manual, no fault is found, the ECU should be replaced.

Information

The **information** menu displays data from the EBS.

DTC

Active	Displays up to 8 active DTCs
Stored	Displays up to 8 stored DTCs
Clear	Clears all DTCs from the EB+
Service Lamp	Displays the reason for the flashing trailer warning lamp.
LED Flashing	Displays the reason for the flashing Info Centre service LED.

Lining Wear

Lining wear	Displays the brake lining wear status (OK or service) of the trailer.
LWI Reset	Used to reset the lining wear status indicator following the replacement of the brake linings.

Tyre Pressure

Tyre Pressure	The tyre pressure monitoring system constantly measures the air pressure and temperature in the trailer tyres.

Distance

Odometer Data	Displays the mileage that is stored in the EB+. It can be configured to display in miles or km.
Trip 1 Data	Displays the mileage recorded by the EB+ since trip 1 was last reset.
Trip 2 Data	Displays the mileage recorded by the EB+ since trip 2 was last reset.
Service (km)	Displays the distance (Miles or km) until the next service.
Service (Days)	Displays the number of days until the next service.

Trailer

Load Plate	Displays the EB+ load plate info.
Configuration	Shows a graphic display of the EB+ configuration.
VIN	Displays the VIN from the EB+
ECU Version	Displays the EB+ software version Displays the EB+ serial number Displays the Info Centre version
Fleet+ Data	The Fleet+ PC program enables the operator to view trailer information. The Info Centre extracts summary data to provide an understanding of recorded events.

Test

The **Test** menu displays data and operates some of the auxiliary functions of the EBS.

Load	Displays the current trailer load.
Tilt Angle	Displays the angle of the trailer in degrees as read from the EBS.
Air Pressure	Displays the EBS air pressures.
Wheels	Displays the current trailer wheel speeds.
Aux Test	This menu is used to switch 'ON' or 'OFF' the EB+ auxiliary functions.
Brake Test	This menu is used to switch 'ON' or 'OFF' the EB+ load sensing function.

For more detailed information refer to the "Info Centre 2 Operators Guide" (reference no. 006 300 001) available from www.haldex.com

Settings

The **Settings** menu is used to set the configuration of the Service Interval, Info Centre 2, LED Settings and swop trailer fitted TPMS wheel sensors.

Service

Service Interval	Used for altering the EB+ service indicator. Both days and distance (miles or km) can be altered. The entered durations will be added to the current odometer reading and only become active when the Service Reset is actioned.
Service Reset	Used for resetting the EB+ service indicator. Note: The amended duration will be the internally stored service interval.

Info Centre

Language	The Info Centre 2 has multiple languages.
Start Screen	This menu allows the user to choose Info Centre functions to be displayed at start up, before the main menu.
PIN	A PIN is used to protect a number of the Info Centre menus.
Unlock	Use this menu to unlock the Info Centre via a valid PIN.
Wheel Scale	Displays the EB+ wheel scale and sensor teeth settings.
Date Format	Allows the user to set the date format.
Date	The time and date stored in the Info Centre is used to record the time and date at which EB+ faults occur.
Time	Used to set the 24hr clock time.
Units	Use to select metric or imperial units for the Info Centre.
Contrast	Use this menu to adjust the LCD screen contrast.
Display	Self test function for the Info Centre display.

TPMS ID

Displays a complete list of configured wheels and sensor ID's and allows the operator to **swap** over wheel sensors (WUS)

LED Settings

LED Flash B+	Used to configure the action of the Service LED when the Info Centre is powered by the EBS.
LED Flash Batt	Used to configure the action of the Service LED when the Info Centre is battery powered.
Tilt Angle	Used to set the tilt angle before the Service LED flashes.

Start Screen

The **Start Screen** menu allows the user to choose Info Centre functions to be displayed at start up, before the main menu.

The user can choose 1 from 10 options available:

- None (if selected there will be no start screen)
- Distance
- DTC
- AUX
- Axle Load Sum
- Language
- Unlock
- Tilt Angle
- Tyre Pressure
- User Defined (if selected go to user defined section below)

The user defined start screen can display up to 5 of the following items:

- Odometer
- Service
- Service Interval
- DTC
- Stored DTCs
- Lining Wear
- Reservoir
- Axle Load Sum

Info Centre 2 / DIAG+ displayed DTC	Possible causes
Wheel sensor 1A or 1B continuity	1A or 1B wheel sensor / wiring open or short circuit
Wheel sensor 2A or 2B continuity	2A or 2B wheel sensor / wiring open or short circuit
Wheel sensor 1A or 1B signal integrity	1A or 1B wheel sensor signal fault
Wheel sensor 2A or 2B signal integrity	2A or 2B wheel sensor signal fault
Wheel sensor 1A or 1B output level	1A or 1B wheel sensor system fault
Wheel sensor 2A or 2B output level	2A or 2B wheel sensor system fault
Brake apply solenoid short circuit	Brake apply solenoid short circuit
Brake apply solenoid open circuit	Brake apply solenoid open circuit
Brake apply solenoid short circuit drive	Brake apply solenoid short circuit energised
Brake apply solenoid unspecified fault	Brake apply solenoid control circuit fault
EPRV 21 or 22 hold solenoid short circuit	Modulator 21 or 22 hold solenoid short circuit
EPRV 21 or 22 dump solenoid short circuit	Modulator 21 or 22 dump solenoid short circuit
EPRV 21 or 22 hold solenoid open circuit	Modulator 21 or 22 hold solenoid open circuit
EPRV 21 or 22 dump solenoid open circuit	Modulator 21 or 22 dump solenoid open circuit
EPRV 21 or 22 hold solenoid short to B+	Modulator 21 or 22 hold solenoid short circuit energised
EPRV 21 or 22 dump solenoid short to B+	Modulator 21 or 22 dump solenoid short circuit energised
EPRV 21 or 22 hold solenoid unspecified fault	Modulator 21 or 22 hold solenoid control circuit fault
EPRV 21 or 22 dump solenoid unspecified fault	Modulator 21 or 22 dump solenoid control circuit fault
EPRV 21 or 22 delivery sensor short circuit	Modulator 21 or 22 delivery transducer short circuit
EPRV 21 or 22 delivery open circuit	Modulator 21 or 22 delivery transducer open circuit
EPRV 21 or 22 slow wheel recovery	Modulator 21 or 22 slow recovery of one wheel
Reservoir sensor short circuit	Reservoir pressure transducer short circuit
Reservoir sensor open circuit	Reservoir pressure transducer open circuit
Excessive reservoir pressure	Reservoir pressure greater than 9.75 bar
Pneumatic demand loss	No corresponding pneumatic demand pressure
Suspension sensor short circuit	Suspension pressure transducer short circuit
Suspension sensor open circuit	Suspension pressure transducer open circuit
Suspension pressure low	Suspension pressure values outside operating range
Slave suspension pressure low	Suspension pressure values outside operating range
REV pressure switch short circuit	Relay emergency valve pressure switch short circuit
REV pressure switch open circuit	Relay emergency valve pressure switch open circuit
REV pressure switch pneumatic fault	Relay emergency valve pressure switch pneumatic fault
REV pressure switch signal fault	Relay emergency valve pressure switch no activation
Slave valve sensor	Pressure transducers open or short circuit
Slave valve modulator	Hold, dump or brake apply solenoid open or short circuit
Slave valve cable	Link cable open or short circuit
Slave valve slow recovery	Slow recovery of one wheel of slave valve

Info Centre 2 / DIAG+ displayed DTC	Possible causes
Towed CAN demand loss	CAN line (pin 6 and 7 on ISO 7638) fault
Towed CAN control loss	CAN line (pin 6 and 7 on ISO 7638) data fault
Power ISO 7638 fail	Power loss on pin 1 or 2 on ISO 7638
Power low voltage	Supply voltage at ECU < 8 V (brake apply solenoid on)
Power high voltage	Supply voltage at the ECU greater than 32 V
Power unspecified fault	Internal ECU fault
ECU EEprom error	Internal ECU fault
ECU configuration error	ECU not programmed
ECU EEprom unspecified error	Internal ECU fault
ECU shutdown FET	Internal ECU fault
Lateral accelerometer short circuit	Lateral accelerometer wiring short circuit
Lateral accelerometer open circuit	Lateral accelerometer wiring open circuit
Lateral accelerometer signal	Lateral accelerometer signal fault
AUX 1 / AUX 2 / AUX 3 / AUX 4 / AUX 5	Auxiliary system wiring open or short circuit
External TPMS	TPMS hardware fault (RCU, WUS etc)

Note:
If a DTC is displayed and after following recommended procedure, as detailed in the service manual, no fault is found, the ECU should be replaced.

Maintenance schedule

Recommend maintenance schedule

Time or milage (which ever occurs first)	Components	Operation
When hubs are removed	Exciter Sensor.	Check for damage Check for wear, clean and readjust
Every 3 months or 25,000 miles (40,000 Km)	Complete system	Perform system check out and air leakage test.
Annually or every 100,000 miles (160,000 km)	Complete system Sensor	Perform system check out and air leakage check.Check wiring and piping security and integrity Check for wear, clean and readjust

Sensor installation

Stripping of axle

See individual axle manufacturers information. Remove hub and drum assembly. Refer to individual ABS axle layout for details of the machine location area 'A' on hub 'B'.

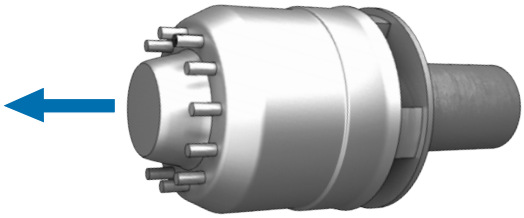

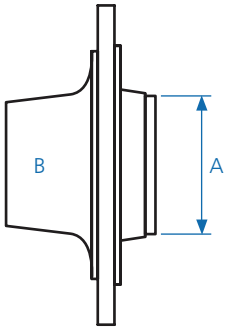

Exciter (solid type)

Available in two sizes to suit differing diameters of wheel. Establish correct exciter teeth in relation to tyre size refer to GS0006.
100 tooth exciter - dynamic effective rolling radius (rdyn) = 442 to 645 mm.
80 tooth exciter - dynamic effective rolling radius (rdyn) = 357 to 522 mm.

Heat exciter uniformly to required temperature.

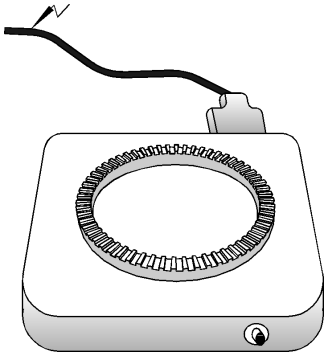

Fit to hub and ensure that it is fully seated on the location area machined on the hub 'B'. Dimension 'C' to be zero gap 0 to 360 degrees.

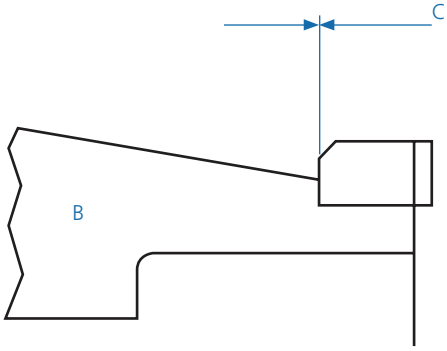

Sensor

Position sensor bracket as detailed on the ABS axle layout, reference dimension ‘D’.
Tack weld bracket ‘E’ first. Recheck for position and squareness and complete weld ‘F’.

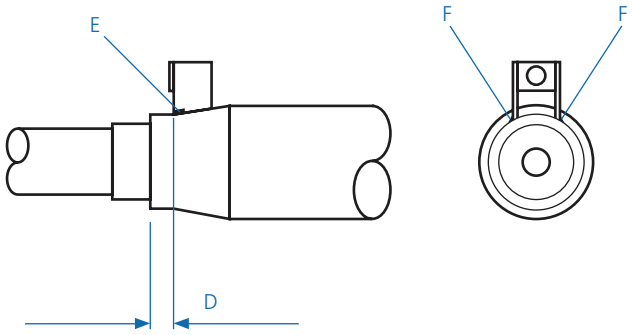

With grease provided liberally coat sensor ‘I’ steel casing and bore of bracket ‘G’. Push the retaining clip ‘H’ fully home into the sensor bracket housing and insert sensor through the retaining clip pushing it firmly into place until the sensor abuts against the back face of the bracket housing ‘J’.

With a grease based corrosion inhibitor, recommended type - Molykote Cu 7439 Plus (Dow Corning) or from the 4g sachet, Haldex part number 042 5857 09, liberally coat sensor ‘I’ steel casing, retaining clip ‘H’ and bore of bracket / housing ‘G’.

Push the retaining clip ‘H’ fully home into the sensor bracket housing and insert sensor through the retaining clip pushing it firmly into place until the sensor abuts the back face of the bracket / housing ‘J’.

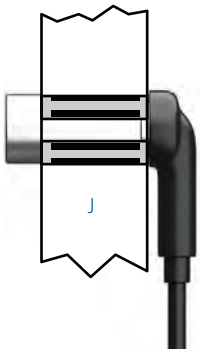

Layout the sensor cable route. Ensure sensor cable is not under tension and not fouling brake shoe. Avoid any sharp edges and moving parts. The cable exit from the brake torque plate or dirt shield should be via a grommet ‘K’.

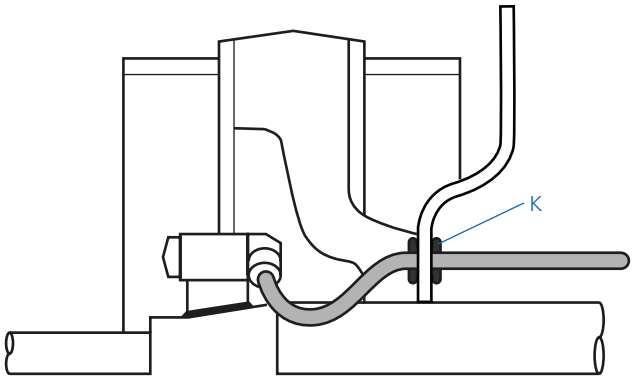

Reassemble hub assembly

Sensor must be central over the exciter teeth.
The gap between exciter ‘M’ and sensor ‘l’ must not exceed N = 0.5 mm.
Maximum run out of 0.2 mm true indicator reading.

Before fitment of hub cap / cover check sensor output.

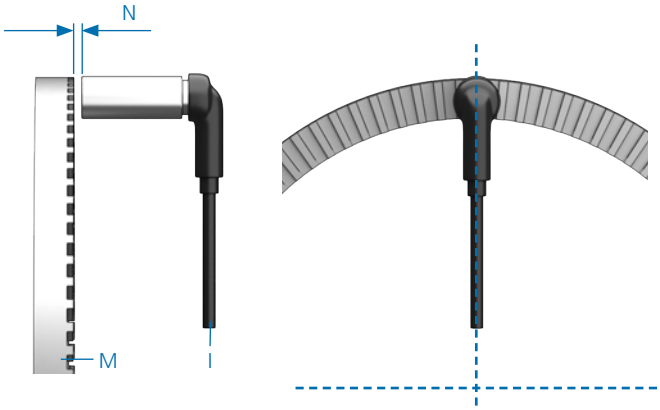

General information

Braking with EB+ Gen3

In an emergency apply full force on the brake pedal.

The EB+ Gen3 will be activated immediately when you fully apply the brakes and will assist you to retain steering control of your vehicle according to the road surface conditions.
Do not apply and release the brakes by pumping the brake. This is known as 'cadence braking' and can have a detrimental effect on vehicle braking.

Lining wear system (LWS)

EB+ Gen3 lining wear system is a device that allows multiple lining wear indicators (LWI) to be connected to a single analogue input 'AUX 4' on the EB+ Gen3 ECU. The EB+ Gen3 lining wear device can be installed on all types of towed vehicles were provisions are made in the brake pads. The product provides lining wear indication on disc brakes without the need to remove wheels via the EB+ Gen3 diagnostic tools Info Centre 2 or DIAG+. The device connects to specified sensors from the brake pads and when a brake lining has reached its wear limit the sensor signals the EB+ Gen3 Lining wear device which activates the EBS warning lamp indicating a fault.

EB+ Gen3 stability

EB+ Gen3 Stability is an advanced roll-over control function that senses when the trailer is near to a rollover condition and automatically applies the trailer brakes to slow the vehicle combination down. It will help to reduce the likelihood of trailer rollover but it will not prevent rollover and should be used as an aid to normal good driving practice. The stability function is a safety back up system, like the anti-lock braking function. It uses a lateral accelerometer to determine the level of cornering and as part of its operation it applies brief pulses of brake pressure during normal cornering, below a level at which a rollover may occur. These pulses may be noticeable to a driver but will reduce in number after the system has learnt the vehicle combinations roll characteristics and are part of the normal operation. This learning process will be repeated every ignition cycle, if the load is changed or if an axle is lifted or lowered.

Traction assist using ILAS®-E

Traction assist is made operative by a 24 v (constant or intermittent) supply to the yellow wire in the 3-core auxiliary cable connected to AUX 2 or AUX 3 and programmed as ILAS®-E Front. On request for traction assist, the front axle lifts.

The front axle drops when either:

- The vehicle speed exceeds 30 kph.
- The suspension pressure reaches more than 130 % of the laden bag pressure.

Soft Docking

Soft Docking, when linked to the Haldex EB+ Gen3 system will apply brakes automatically when reversing into a loading bay. The system will reduce vehicle speed to prevent significant damage to the vehicle and the dock by timely application of the brake pressure when reversing. The braking is initiated by sensing of 1 metre distance from the loading bay.

Info Point

With an illuminated spot the Info Point will instantly show if the trailer has a fault in the braking system. The Info Point connects to the EB+ Gen3 auxiliary. It is dedicated to alert fault in lining wear, sensors, COLAS® etc. It is ADR approved.

TPMS

Haldex TPMS is a tire pressure monitoring system for any commercial vehicle trailer equipped with EB+. The EB+ shall facilitate the transmission of pressure and temperature for each wheel via ISO 11992 CAN to the towing vehicle and the Info Centre 2 can be used locally to display the pressure and temperature of the trailer. The wheel unit sensor (WUS) measures the pressure and temperature inside the tire and transmits all the measurements by radio frequency (RF) to the receiver control unit (RCU). The RCU then determines the system status and sends it to the electronic braking system (EBS) on the trailer CAN bus. The EBS then transmits this information to the dashboard which can display the required information of pressure, warning, alerts and system status for the vehicle driver.
The system is configured and diagnosed through CAN communication using DIAG+. The TPMS trigger uses low frequency (LF) to communicate with the wheel unit (WUS) and is used to force the WUS to send it's unique identification code (ID) to the RCU.

TPMS components

Wheel unit sensor (WUS)

Receiver control unit (RCU)

TPMS trigger

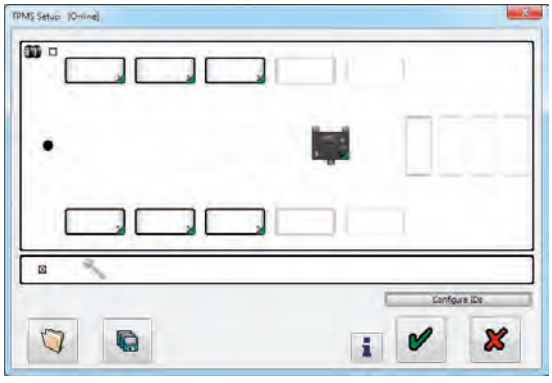

DIAG+ setup screen (example)

Semi trailer - standard installation

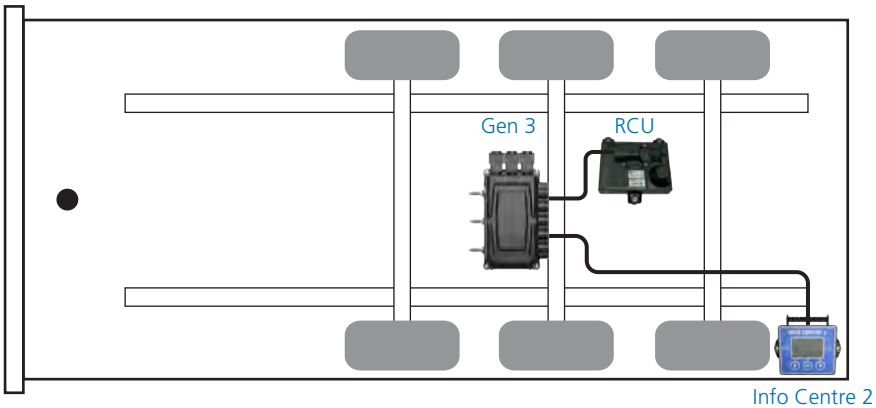

Cable description	Part number
RCU cable (rear, unterminated)	814 040 101

Semi trailer - complex installation (example)

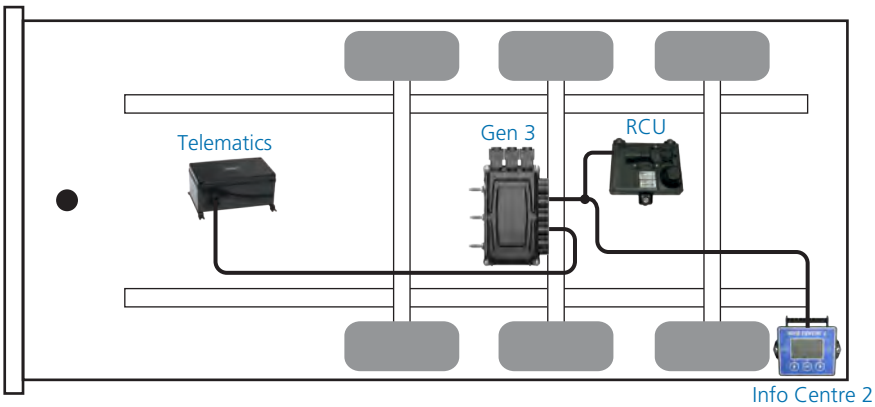

Cable description	Part number
RCU cable (rear, unterminated)	814 040 001
Splitter cable	814 038 001
DIN telematics cable	814 033 0xx

Program Gen3 via DIAG+ without CAN termination (Gen3 tab in auxiliary setup) if telematics unit has CAN termination.

Full trailer - standard installation

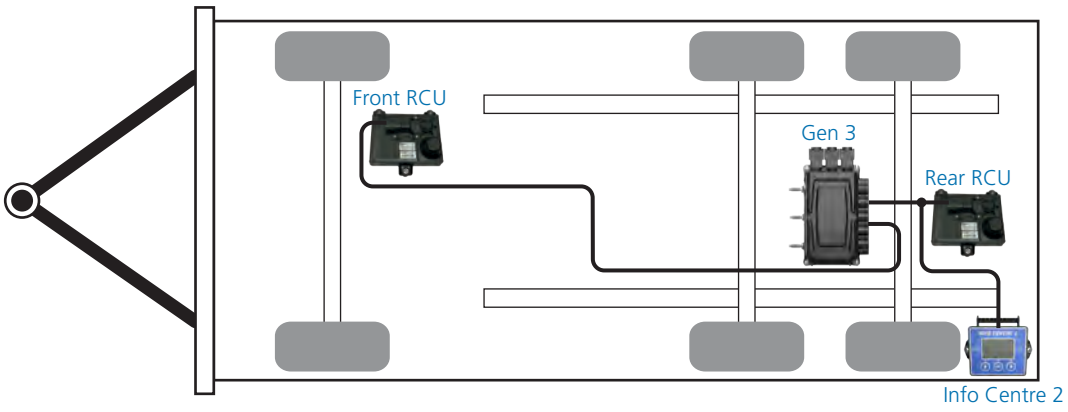

Cable description	Part number
RCU cable (unterminated)	814 040 001
Splitter cable	814 038 001
Front RCU cable (terminated)	814 040 2xx

Program Gen3 via DIAG+ without CAN termination (Gen3 tab in auxiliary setup).

Full trailer - complex installation (example)

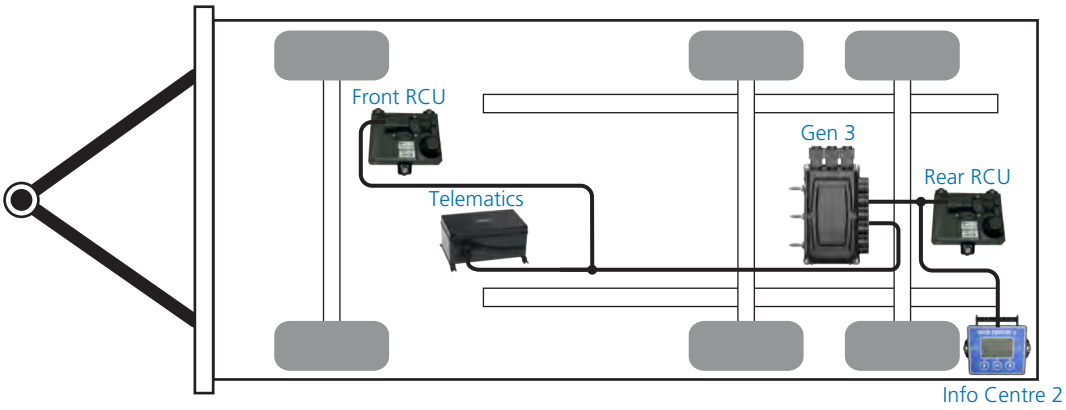

Cable description	Part number
RCU cable (unterminated)	814 040 001
Splitter cable (Qty 2)	814 038 001
DIN telematic cable	814 033 0xx
Front RCU cable (terminated)	814 040 2xx

Program Gen3 via DIAG+ without CAN termination (Gen3 tab in auxiliary setup).

Part reference

These available service parts can be obtained from Haldex service centres or distributors.

EB+ Gen3 electronic control unit (ECU)							
	2M	3M	DCV	QRV	STAB	S AUX	P AUX
823 008 xxx	✔		✔	✔	✔	✔	
823 034 xxx	✔	✔	✔	✔	✔	✔	✔
950 823 008	✔		✔	✔	✔	✔	
950 823 034	✔	✔	✔	✔	✔	✔	✔

See page 130 for a complete list of Gen3 assembly part numbers.

EB+ Gen3 1M Slave	Part number
Gen3 1M Slave	810 023 001

The EB+ Gen3 Slave assembly (ECU + valve) is only supplied as one complete unit that cannot / should not be separated.

EB+ Gen3 label	Part number
Label	028 5262 09

Sensor kit	Part number
Angled (inc. retaining clip)	950 364 503
Straight (inc. retaining clip)	950 364 506

EB+ Info Centre 2	Part number
Haldex Info Centre 2	815 041 001
Haldex Info Centre 2 ADR	815 046 001

COLAS+®	Part number
Raise and lower valve with reset to ride	338 061 xxx
Raise and lower valve with reset to ride	338 062 xxx
Raise and lower valve with reset to ride	338 071 xxx

ILAS®-E	Part number
Lift axle valve	352 061 xxx
Lift axle valve	352 062 xxx
Lift axle valve	352 070 xxx

TrCM+	Part number
With / without safe parking	352 067 xxx

TEM®	Part number
With safe parking	352 075 xxx

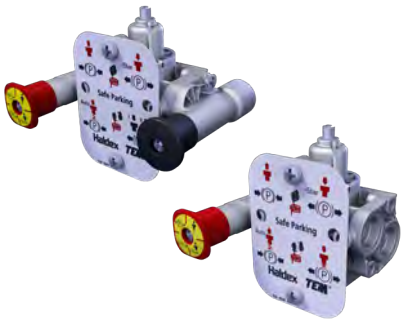

REV	Part number
With port for control line sensor	351 033 xxx

Control line sensor	Part number
M16 x 1.5 thread for REV port	815 022 001

Main assembly service kits	Part number
QRV service kit	950 800 307
DCV service kit	950 800 905

Info Point	Part number
Info Point with 7 m cable	815 021 001
Info Point with 18 m cable	815 021 011

Soft Docking	Part number
Complete system with acoustic and optical aids	815 024 001
Kit without optical aid	815 025 001
Kit without acoustic aid	815 026 001
Basic kit	815 027 001
Lite kit	815 051 001
Sensor adjusting tool	042 708 309

TPMS	Part number
Receiver control unit (RCU)	815 052 001
Wheel unit sensor (WUS)	042 727 209
Cable / clamp assembly	003 951 709
Cable stretcher tool	042 727 309
Wheel unit sensor indicator label	006 700 021_M
TPMS trigger (hand unit)	815 053 001

Lining wear system	Part number
L = 2 m AUX cable - standard	815 015 001
Blanking plug (std version)	027 5260 09
Sensor extension cable (5 m)	814 007 111

EB+ Gen3 stability	Part number
External lateral accelerometer	815 012 011

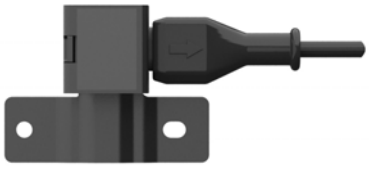

Electronic height sensor	Part number
Electronic height sensor	815 030 001
Height sensor cable (see AUX cables)	814 012 2xx
Linkage (vertical)	612 025 001
Linkage (horizontal)	003 575 709

DIAG+	Part number
EB+ Gen3 diagnostic cable kit	950 800 912
Kit contents:	
ECU / pc interface cable (6.5 m)	814 036 001
EB+ ISO diagnostic cable	815 018 001
EB+ SOV / pc interface cable (6.5 m)	814 011 001
Transit case	042 623 719

EB+ interface	Part number
EB+ interface kit	950 800 909
Kit contents:	
USB pc interface (DIAG+)	815 023 001
USB cable	042 707 309

Haldex Fleet+ is the winner of the Trailer Innovation Award 2013 in the 'Smart Trailer' category. This pan-European awards scheme involving leading road transport magazines from ten European countries is held every two years, to tie in with IAA (Internationale Automobil-Austellung) commercial vehicles show in Hannover, Germany.

Fleet+	Part number
Fleet+ interface kit	950 800 910
Kit contents:	
USB pc interface (Fleet+)	815 023 011
USB cable	042 707 309

EB+Gen3 ISO cables

ISO 7638 socket (unfused)	Length
814 003 102	12 m
814 003 112	16 m
814 003 122	18 m
814 003 132	9 m
814 003 142	14 m
814 003 152	6 m

ISO 7638 plug (unfused)	Length
814 004 102	9 m
814 004 112	12 m
814 004 122	15 m
814 004 132	18 m

Power A	Length
814 009 101	16 m
814 009 111	14 m
814 009 121	12 m
814 009 131	5 m
814 009 141	1.5 m
814 009 151	4.5 m

ISO 7638 to 7-pin DIN connector	Length
814 003 201	1 m
814 003 211	12 m

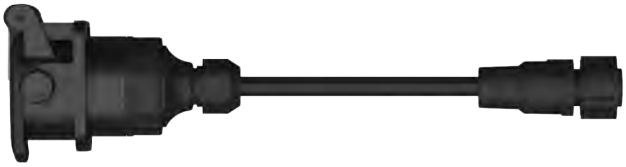

ISO cable assembly male / female	Length
814 022 001	30 m

ISO power A to 7-pin connector	Length
814 026 001	1.5 m
814 026 011	4.5 m
814 026 021	12 m

ISO 12098 / ISO 1185 (24N)	Length
814 002 301	6 m
814 002 311	12 m
814 002 321	9 m
814 002 331	4 m
814 002 341	1 m

ISO 7638 Diagnostic	Length
815 018 001	0.5 m

EB+Gen3 auxiliary cables

Auxiliary cable	Length
814 001 302	7 m
814 001 312	18 m
814 001 322	2 m
814 001 332	4 m
814 001 342	1 m
814 001 352	12 m
814 001 372	10 m

Auxiliary cable to DIN connector	Length
814 012 201	7 m
814 012 211	18 m
814 012 221	1 m
814 012 231	2 m
814 012 241	5 m
814 012 251	3 m
814 012 261	4 m
814 012 271	10 m

Male to female to female (2x2x2 way)	L1	L2
814 027 001	0.5 m	0.5 m

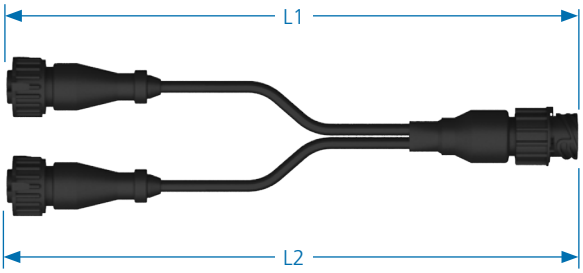

Male to female to female (3x2x2 way)	L1	L2
814 028 011	4 m	2 m
814 028 001	0.5 m	0.5 m

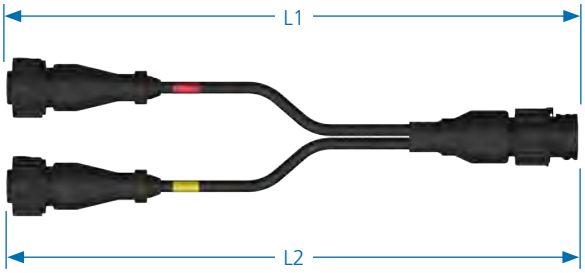

Auxiliary (3 pole) to auxiliary (3 pole)	Length
814 032 001	1 m
814 032 011	4 m
814 032 021	7 m
814 032 031	18 m

Y-splitter 3x2x2 way	Length
814 039 001	0.5 m

Y-splitter 3x3x3 way	Length
814 039 101	0.5 m

Super AUX cable	Length
814 002 301	6 m
814 002 311	12 m
814 002 321	9 m
814 002 331	4 m
814 002 341	1 m

Power B to ISO 15170 Super AUX	Length
814 004 301 (4 pole)	1 m
814 004 311 (4 pole)	6 m

Power B to ISO 15170 Super AUX	L1	L2
814 029 001 (4 pole)	1 m	1 m
814 029 011 (4 pole)	6 m	5 m
814 029 021 (4 pole)	6 m	1 m

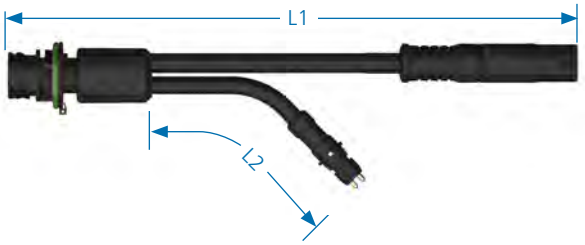

Sensor cable	Length
814 004 401	3 m
814 004 411	6 m
814 004 421	2 m
814 004 431	10 m
814 004 441	14 m
814 004 451	8 m
814 004 461	12 m
814 004 471	4 m

EB+Gen3 diagnostic cables

Info Centre 2 to side of vehicle	Length
814 025 001	1 m

Side of vehicle (SOV) to ECU	Length
814 030 001	6.5 m
814 030 011	2.5 m
814 030 021	5 m
814 030 031	15 m

Vehicle to pc interface (dongle)	Length
814 011 001	6.5 m
814 011 011	15 m

DIAG to DIN	Length
814 033 001	1 m
814 033 011	12 m

DIAG to pc interface (dongle)	Length
814 036 001	6.5 m
814 036 011	15 m
814 036 021	20 m

DIAG to DIAG	Length
814 037 001	6.5 m
814 037 011	0.5 m
814 037 021	8 m
814 037 031	14 m

Y-splitter 4x4x4 way	Length
814 038 001	0.5 m

DIAG to female FCI connector	Length
814 040 001 (rear RCU unterminated)	1.2 m
814 040 101 (front RCU unterminated)	1.2 m
814 040 201 (front RCU terminated)	1.2 m
814 040 211 (front RCU terminated)	6 m
814 040 221 (front RCU terminated)	10 m

3M Link cable

Sensor cable	Length
814 041 001	12 m
814 041 011	2 m
814 041 021	5 m
814 041 031	14 m
814 041 041	10 m
814 041 051	8 m

Gen3 part numbers (including pipe fittings)

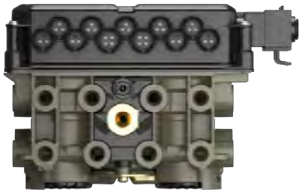

Part No	Variants					Port 4 Side / 22					Front face									Port 41 Side / 21				
	DCV	QRV	STAB	S AUX	P AUX	4	1	Test	22	23	22	22	21	21	11	23	23	23	23	21	23	Test	41	1
823 008 001	✔	✔	✔	✔		M16	M22	M12	M16	M16	M16	M16	M16	M16	M16	M16	M16	M16	M16	M16	M16	M12	M16	M22
823 008 101	✔	✔	✔	✔		8x1	15x1.5	Plug	12x1.5	8x1	12x1.5	12x1.5	12x1.5	12x1.5	8x1	8x1	Plug	Plug	8x1	12x1.5	8x1	8x1	8x1	15x1.5
823 008 111	✔	✔	✔	✔		8x1	15x1.5	8x1	12x1.5	Plug	12x1.5	12x1.5	12x1.5	12x1.5	10x1	8x1	8x1	8x1	8x1	12x1.5	Plug	Plug	8x1	15x1.5
823 008 213	✔	✔	✔	✔		8x1	16x2	Plug	12x1.5	8x1	12x1.5	12x1.5	12x1.5	12x1.5	8x1	Plug	8x1	8x1	Plug	12x1.5	8x1	Plug	8x1	16x2
823 008 291	✔	✔	✔	✔		8x1	15x1.5	Plug	12x1.5	8x1	12x1.5	12x1.5	12x1.5	12x1.5	8x1	8x1	8x1	8x1	8x1	12x1.5	8x1	Plug	8x1	15x1.5
823 034 001	✔	✔	✔	✔	✔	M16	M22	M12	M16	M16	M16	M16	M16	M16	M16	M16	M16	M16	M16	M16	M16	M12	M16	M22
823 034 101	✔	✔	✔	✔	✔	8x1	15x1.5	Plug	12x1.5	8x1	12x1.5	12x1.5	12x1.5	12x1.5	8x1	8x1	Plug	Plug	8x1	12x1.5	8x1	8x1	8x1	15x1.5
823 034 111	✔	✔	✔	✔	✔	8x1	15x1.5	8x1	12x1.5	Plug	12x1.5	12x1.5	12x1.5	12x1.5	10x1	8x1	8x1	8x1	8x1	12x1.5	Plug	Plug	8x1	15x1.5
823 034 213	✔	✔	✔	✔	✔	8x1	16x2	Plug	12x1.5	8x1	12x1.5	12x1.5	12x1.5	12x1.5	8x1	Plug	8x1	8x1	Plug	12x1.5	8x1	Plug	8x1	16x2
823 034 291	✔	✔	✔	✔	✔	8x1	15x1.5	Plug	12x1.5	8x1	12x1.5	12x1.5	12x1.5	12x1.5	8x1	8x1	8x1	8x1	8x1	12x1.5	8x1	Plug	8x1	15x1.5
950 823 008	✔	✔	✔	✔		M16	M22	M12	M16	M16	M16	M16	M16	M16	M16	M16	M16	M16	M16	M16	M16	M12	M16	M22
950 823 034	✔	✔	✔	✔	✔	M16	M22	M12	M16	M16	M16	M16	M16	M16	M16	M16	M16	M16	M16	M16	M16	M12	M16	M22

DCV = Double check valve STAB = Stability (roll-over) P AUX = Premium AUXQRV = Quick release valve S AUX = Super AUX

Haldex develops and provides reliable and innovative solutions focused on brake and air suspension products to the global commercial vehicle industry. In 2019, the company had net sales of approximately SEK 5.1 billion and employed 2,172 people.

Australia
Haldex Brake Products Pty Ltd
Victoria
Tel.: +61 3 9579 7070
+61 418 170 879

Austria
Haldex Wien Ges.m.b.H.
E-Mail: info.at@haldex.com

Belgium
Haldex N.V.
E-Mail: info.be@haldex.com

Brazil
Haldex do Brasil Ind. E Com. Ltda
São José dos Campos
Tel.: +55 12 3935 4000
E-Mail: info.brasil@haldex.com

Canada
Haldex Ltd
Cambridge, Ontario
Tel.: +1 519 621 6722
Fax: +1 519 621 3924

China
Haldex Vehicle Products Co. Ltd.
Suzhou
Tel.: +86 512 8885 5301
Fax: +86 512 8765 6066
E-Mail: info.cn@haldex.com

France
Haldex Europe SAS
Weyersheim
Tel.: +33 3 88 68 22 00
Fax: +33 3 88 68 22 09
E-Mail: info.eur@haldex.com

Germany
Haldex GmbH
Heidelberg
Tel.: +49 6 221 7030
Fax: +49 6 221 703400
E-Mail: info.de@haldex.com

Hungary
Haldex Hungary Kft
Szentlörinckáta
Tel.: +36 29 631 400
Fax: +36 29 631 401
E-Mail: info.hu.eu@haldex.com

India
Haldex India Private limited
Nashik
Tel.: +91 253 66 99 501
Fax: +91 253 23 80 729

Italy
Haldex Italia Srl.
Lissone
Tel.: +39 039 47 17 02
Fax: +39 039 27 54 309
E-Mail: info.it@haldex.com

Korea
Haldex Korea Ltd.
Seoul
Tel.: +82 2 2636 7545
Fax: +82 2 2636 7548

Mexico
Haldex de Mexico S.A. De C.V.
Monterrey
Tel.: +52 81 8156 9500

Poland
Haldex Sp. z.o.o.
Praszka
Tel.: +48 34 350 11 00
Fax: +48 34 350 11 11
E-Mail: info.pl@haldex.com

Russia
OOO "Haldex RUS"
Moscow
Tel.: +7 495 747 59 56
Fax: +7 495 252 77 56
E-Mail: info.ru@haldex.com

Spain
Haldex España S.A.
Granollers
Tel.: +34 93 84 07 239
Fax: +34 93 84 91 218
E-Mail: info.es@haldex.com

Sweden
Haldex Brake Products AB
Landskrona
Tel.: +46 418 47 60 00
Fax: +46 418 47 60 01
E-Mail: info.se@haldex.com

United Kingdom
Haldex Ltd.
Newton Aycliffe
Tel.: +44 1325 310 110
E-Mail: info.gbay@haldex.com

Haldex Brake Products Ltd.
MIRA Technology Park
Tel.: +44 2476 400 300
E-Mail: info.gbre@haldex.com

USA
Haldex Brake Products Corp.
Kansas City
Tel.: +1 816 891 2470
Fax: +1 816 891 9447
E-Mail: info.us@haldex.com

©2020, Haldex AB. This material may contain Haldex trademarks and third party trademarks, trade names, corporate logos, graphics and emblems which are the property of their respective companies. The contents of this document may not be copied, distributed, adapted or displayed for commercial purposes or otherwise without prior written consent from Haldex.

Innovative Vehicle Solutions

www.haldex.com

006 300 018_EN/05.13/Haldex UK/02.2021