TECHNICAL MANUAL

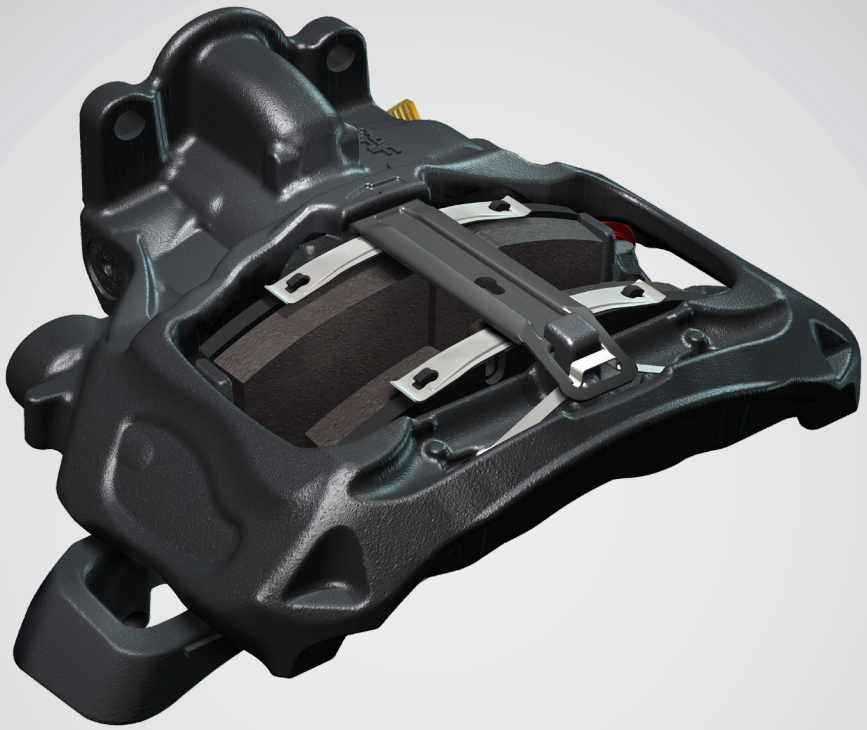

ModuLT™ Gen II

4 Bolt DBT22LT Trailer Air Disc Brake

Haldex

Table of Contents

Section | Page

Guide to using this Technical Manual 3
General Safety Information 3
Legal and General Service Notes 4
ModulT Gen II Introduction 6
Product Offering 7
Tools 8
Exploded View 9
Part Identification and General Information 10
ModulT Gen II DBT22LT Specifications 11
Functional Operation 15
Wheel-On Inspection Procedures 17
Wheel-Off Inspection Procedures 18
Brake Caliper and Pad Inspection 19
Brake Pad Replacement 21
Rotor Health 25
Brake Chamber 27
Slide Function Movement Measurement 30
Adjuster Mechanism Function Test 31
Caliper Overhaul 34
Replacement of Slide Function Assembly 37
Caliper Removal and Replacement 43
Troubleshooting 44

Guide to using this Technical Manual

Through this manual, there are several HAZARD WARNINGS that must be read and adhered to in order to prevent possible personal injury and/or damage to equipment. Three signal words "DANGER", "WARNING", and "CAUTION" are used to indicate the severity of a hazard, and are preceded by the safety alert symbol.

DANGER Denotes the most serious hazard, and is used when serious injury or death **will** result from misuse or failure to follow specific instructions.

WARNING Used when serious injury or death **may** result from misuse or failure to follow specific instructions.

CAUTION Used when injury or product/equipment damage may result from misuse or failure to follow specific instructions.

It is the responsibility and duty of all personnel involved in the installation, operation, and maintenance of the equipment on which this device is used to fully understand the ! Danger, ! Warning, and ! Caution procedures by which hazards are to be avoided.

General Safety Information

All safety precautions shall be read and followed before any inspection, removal, or installation procedure described in this Technical Manual.

CAUTION Before operating the vehicle, the vehicle's disc brake operating system must be checked and adjusted necessary. Contact the vehicle manufacturer for relevant information.

WARNING This Gen II Technical Manual is for the exclusive use of trained professionals within the commercial vehicle industry and related repair facilities.

WARNING Provide this Technical Manual to the person responsible for installation, operation, and maintenance of the product described herein. Without access to this information, installation, operation or maintenance of this product, may result in brake failure, equipment damage and possible personal injury. All installations and maintenance should be performed by qualified personnel.

CAUTION Use only genuine Haldex replacement parts. The use of non-genuine Haldex replacement parts could result in unsafe and/or substandard product performance and may void your warranty.

WARNING It is very important that the distribution of brake force, between axles/vehicles, in a vehicle combination is adapted so that the brake force for each axle/vehicle is proportioned. If the brake force is not correctly distributed it can lead to excessive braking of a vehicle and/or one or more axles in the combination. This can result in overheating, accelerated wear, and damage to the disc brake, pads resulting in brake damage and failure. Following replacement of any essential components in the disc brake operating system. The disc brake operating system must also be checked and adjusted, to ensure safe operation of the vehicle. Failure to do so may result in damage to the disc brake, axle, and wheel brake components, and consequently personal injury or death.

Legal and General Service Notes

Haldex Brake Products reserves the right to make changes to this document in the interest of technical progress without prior notice. For the latest update of the ModulT Gen II Technical Manual, please visit haldex.com and search for L30050. Haldex Brake Products does not assume any liability due to incorrect or inappropriate parts being installed to the product or omittance of appropriate testing after servicing the product.

This manual is subject to copyright laws, and the Haldex Brake Products reserve all rights. No part of this manual may be reproduced, copied, or translated in any form or by any means without the prior written permission of the Haldex Brake Products.

Brand names mentioned in this manual are not identified in all cases, but they nevertheless are subject to the provisions of trademark legislation.

The failure of any individual provision of this disclaimer to comply with current legal requirements does not affect the remaining provisions' validity.

WARNING Failure to follow the instructions in this Technical Manual may cause damage to the disc brake, axle, and wheel brake components, and consequently personal injury or death.

Safety Precautions

All safety precautions shall be read and followed before any inspection, removal, or installation procedure described in this Technical Manual.

Before operating the vehicle, the vehicle's disc brake operating system must be checked and adjusted (if necessary) in accordance with the relevant brake calculations. Contact the vehicle manufacturer for relevant information.

Replacement Parts

Always use parts that are approved for the vehicle, axle or disc brake. Following replacement of any essential components or parts in the disc brake operating system, must also be checked and adjusted (if necessary) in accordance with vehicle specifications.

Brake Force Distribution

It is very important that the distribution of brake force, between axles/vehicles, in a vehicle combination is adapted so that the brake force for each axle/vehicle is proportioned.

If the brake force is not correctly distributed it can lead to overheating, accelerated wear and damage to the disc brake, pads, rotors, tires and wheel components.

IMPORTANT!
It is important to take care when using chemicals and/or cleaning tools (e.g. knife, brush, etc.) to avoid damage or displacement of hoses, seals and other components. Proper personal safety equipment must be worn.

Recycling

When replacing the disc brake or parts, the components removed must be recycled and destroyed in compliance with applicable environmental legislation, regulations and provisions.

Cleaning

For the disc brake to function correctly it is important to ensure it is kept clean and normal movement is not restricted by mud, ice, snow, objects, etc. Damage of this type may cause direct brake failure, malfunction or shortening of the service life of the disc brake.

Painting

The disc brake can be finished with paint that has trade approval for this purpose (automotive paint). Care must be taken to ensure that the paint layer does not cause damage or restrict the natural movement or operation of the disc brake. All contact surfaces, friction and rubber parts must therefore be protected or masked.

The following areas must not be painted:
All bellows, reset shaft protection plug, complete brake pads, the swept area of the rotor, the disc brake mounting surfaces to axle/brake chamber and all bolted connections.

Shot-blasting

If the vehicle is shot-blasted, all rubber parts and pads on the disc brake must be protected. The brake chamber must be fitted (or any protective parts that have a similar sealing function). The shipping seal fitted to the brake chamber opening on a new disc brake does not provide adequate protection during shot-blasting.

The disc brake must be thoroughly cleaned after blasting to ensure that its natural movement is not obstructed by remnants of shot-blasting material. Check seals and rubber parts to make sure they have not been damaged. Also refer to the axle manufacturer's instructions.

Installation

The disc brake must not be installed or treated in such a way that exposes it to normal thermal, mechanical or chemical influences that can cause reduced braking effect or damage to vital components in the brakes. These influences/damages may result in a shortened service life for the disc brake and its components, reduced brake effect or at worst total brake failure.

ModulT Gen II
Introduction

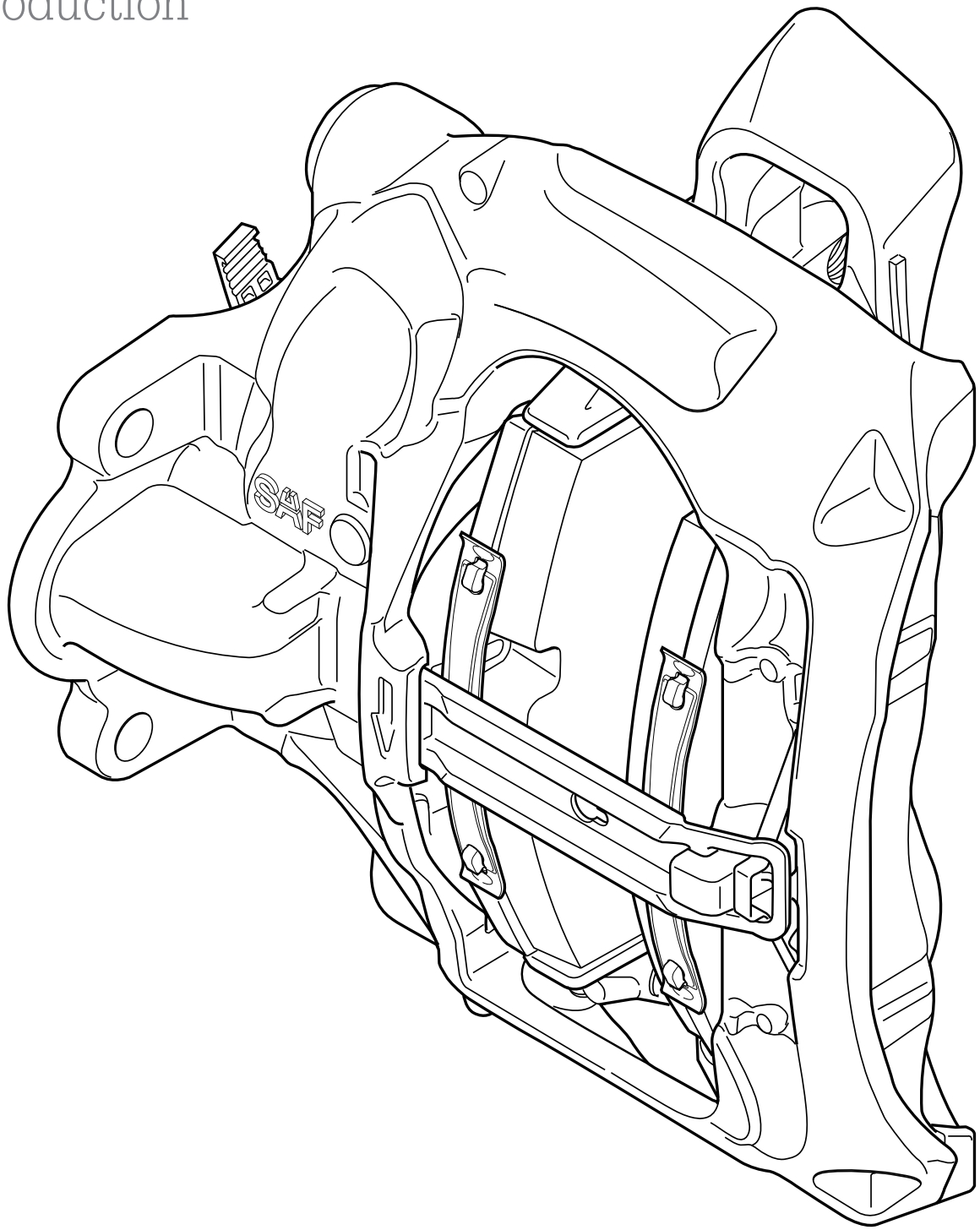

Product Offering

Calipers

Aftermarket Number	Description	Side	With Carrier	With Pads	Bolt Pattern
H113553	DBT22LT RH W/CR W/P SAF	Right	Yes	Yes	4 Bolt
H113552	DBT22LT LH W/CR W/P SAF	Left	Yes	Yes	4 Bolt

Repair Kits and Tools

Aftermarket Numbers	Description	Includes
790-22116	Pad Accessory Kit	2 pad springs, 1 pad retainer, 1 spring bracket, 1 reset shaft protection plug
790-22117	Axle Pad Kit	384 copper-free pads, 4 pad springs, 2 pad retainers, 2 spring brackets, 2 reset shaft protection plugs
790-95399	Mechanism Seal Kit	1 reset shaft protection plug, 1 mechanism bellow, 1 spring bracket, 1 grease tube
790-95397	Slide Function Seal & Pin Kit	2 leading pin bearings, 1 leading pin spacer, 1 leading slide pin, 2 screws (M16x80), 1 small cup, 1 trailing composite bushing, 1 trailing slide pin, 1 large cup, 1 reset shaft protection plug, 2 slide pin bellows, 1 spring bracket
790-95398	Reset Shaft Kit	1 reset shaft protection plug, 1 mechanism bellow, 1 spring bracket, 1 grease tube
790-95231	Tool Box Kit	1 mandrel, 1 nut, 1 reinstall washer, 1 cup for slide function bearing, 3 mounting tools for the mechanism bellow, 1 3/4" drive, long reach, 14mm, 1 3/8" drive Torx T55 for the reset shaft, 1 special tool for removing the reset shaft complete, 1 threaded spindle for pull in/ pull out tools, 1 axial bearing for use with the threaded bar.
790-22118	Thrust Plate Rebuild Kit	1 Gen II DBT22LT thrust plate, 1 mechanism bellows, 1 spring bracket, 1 reset shaft plug, 1 grease tube

Tools

Haldex ModulT Tool Kit complete

Part Number (P/N) 791-95231

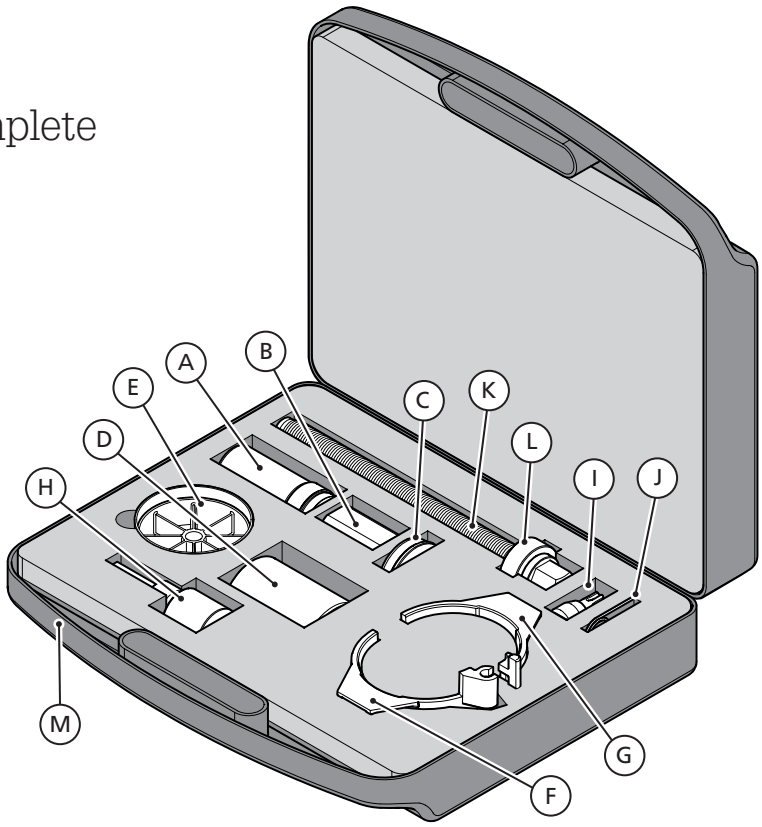

Contents of Haldex ModulT tool kit Part No. 95231		
A	Mandrel	95219
B	Nut	96820
C	Clamp	95221
D	Cup	95222
E	Thrust plate bellows press	95224
F	Caliper bellows press - Left	95225
G	Caliper bellows press - Right	95226
H	Socket insex 14	95233
I	Reset tool Torx T55	97240
J	Pulling bracket	95210
K	Spindle	96819
L	Axial ball bearing	95423
M	Toolbox	95237

Exploded View

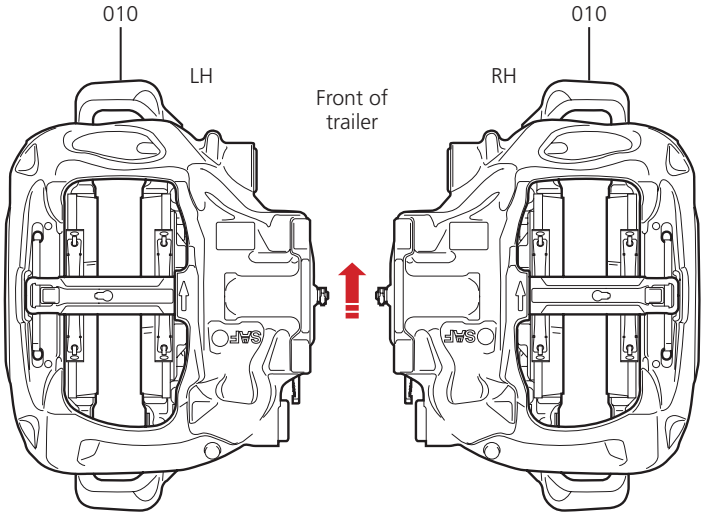

010 Air Disc Brake Assemblies Complete - Left Hand & Right Hand
015 Caliper Housing
020 Carrier
030 Bearings - Leading Slide Function
040 Spacer
050 Leading Slide Pin
060 Slide Pin Bolt
070 Leading Protective Cup
080 Composite Bushing - Trailing Slide Function
090 Trailing Slide Pin
100 Trailing Protective Cup
120 Reset Shaft Complete
130 Reset Shaft Protection Plug
140 Bellows - Slide Function
150 Brake Pads
160 Pad Springs
170 Spring Bracket
180 Pad Retainer
190 Thrust Plate Bellow
210 Thrust Plate

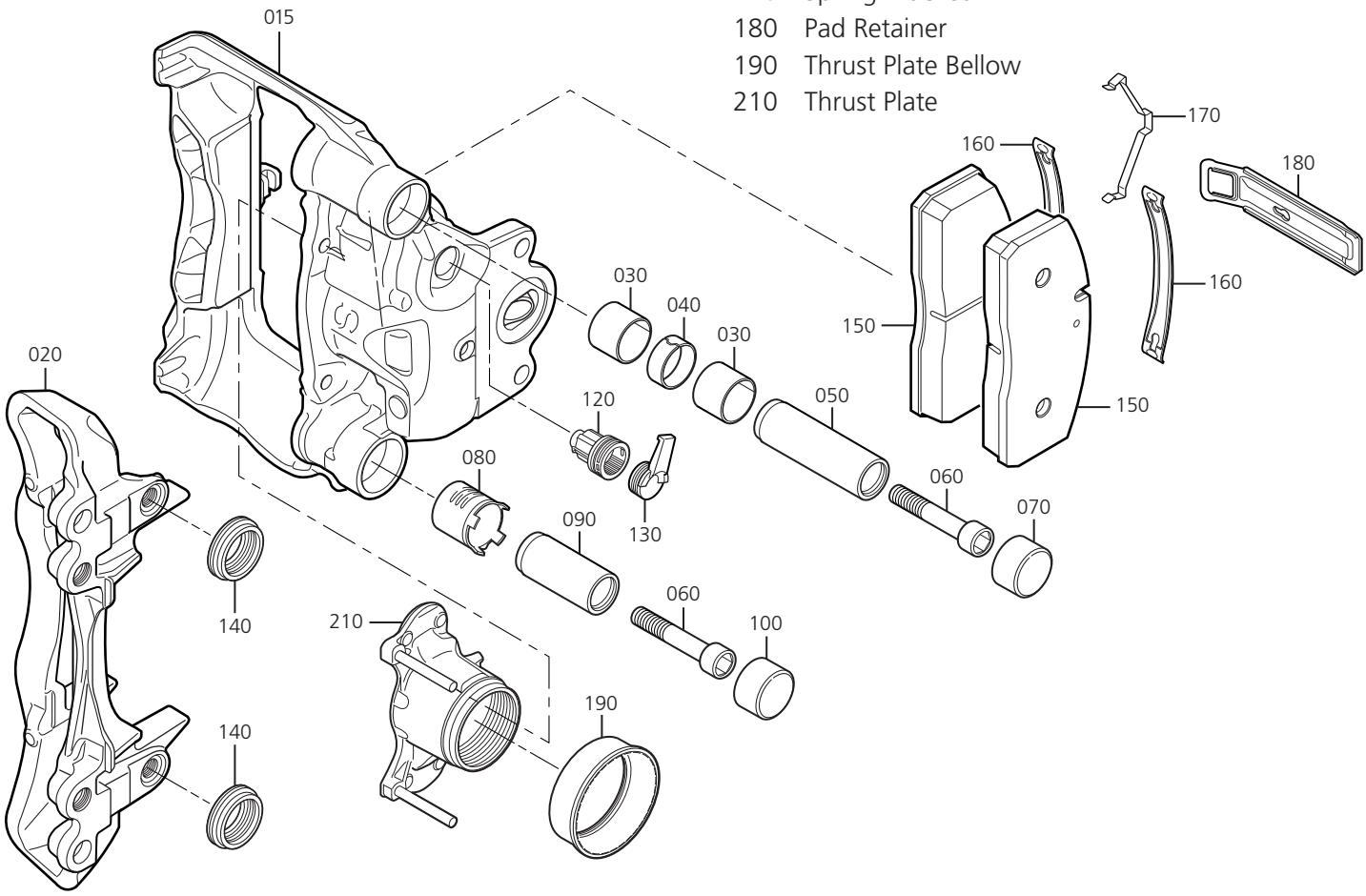

Part Identification and General Information

Haldex Parts

It is vital that only Haldex original parts are used during all service replacement activities.

The use of non-Haldex parts can affect the function, performance and/or lifetime of the caliper. The use of non-Haldex parts will immediately terminate any warranty of the disc brake unit.

Label Description

A. Logo

B. OEM Part Number

C. A/M Part Number

D. Serial Number

The S/N contains 10 digits (YYWWLLSSSS) year/week/ assembly line/serial no. Gen II part number will be in the format Hxxxxxx. Please note the Gen I part number's format begins with 9xxxx.

Marking Plate.

Gen II Serial Number explanation:										
Example	**1**	**4**	**0**	**4**	**1**	**0**	**2**	**2**	**5**	**2**
Comment	Year	Year	Week	Week	Haldex No.	Haldex No.	Serial No.	Serial No.	Serial No.	Serial No.

ModulT Gen II DBT22LT Specifications

The DBT22LT Gen II is a disc brake intended for a 430 mm rotor and used for applications with axles up to 23K lbs. (10.4 tonnes) GAWR. Maximum rated brake torque is 15K ft-lbs. (20 kNm).

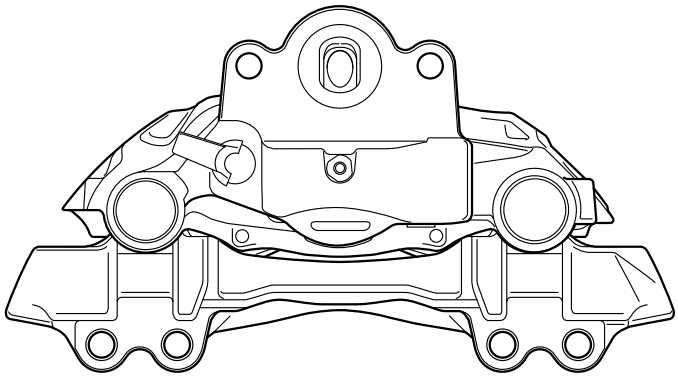

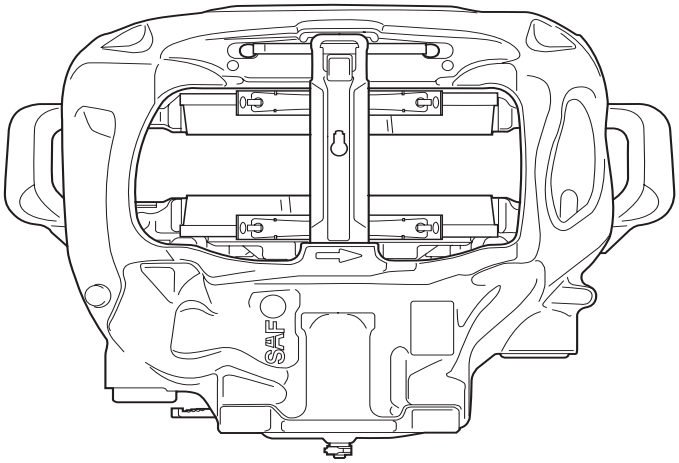

Specification Characteristic Data:

- Design rated max brake torque 15K ft-lbs. (20 kNm)
- Max axle load 23K lbs. (10.4 tonnes)
- For wheel size 22.5”
- Max force 2.5K lbs. (11KN)
- Friction radius 6.8 in (173 mm)
- Max brake cylinder stroke 2.5 in (65 mm)
- Nominal brake ratio 15.4:1
- Mechanical efficiency > 93%
- Running clearance (min-max) 0.03 - 0.04 in (0.7 - 1.1 mm)
- Weight of complete disc brake unit, including pads < 66 lbs. (< 30 kg).

Rotor:

- External diameter of brake rotor 16.9 in (430 mm)
- Total thickness when new 1.8 in (45 mm)
- Residual rotor minimum thickness 1.5 in (37 mm)

Pad:

- Total brake pad thickness 1.2 in (30 mm)
- Backplate thickness 0.03 in (9.0 mm)
- Minimum friction material thickness 0.08 in (2.0 mm)

Options:

- Carrier hole pattern.
- Approved for 20K/23K (9/10.4 tonnes) axle loads.

⚠ WARNING Failure to follow the instructions in this Technical Manual may cause damage to the disc brake, axle and wheel brake components and consequently personal injury or death.

Wear Limits

Brake pads, min. lining thickness ..... 0.08 in (2.0 mm)

Differential pad wear between inner and outer pad
during operation shall not exceed ..... ± 0.06 in (± 3 mm)

Brake rotor, minimum thickness ..... 1.5 in (37 mm)*

* Note: Always refer to vehicle/axle manufacturers recommendations.

Tightening Torques

Haldex ModulT GenII ADB

Bolts x2 for slide pins ..... 133 ft-lbs + 70° (180 Nm + 70°)

Brake chamber fixation nuts..... 130 ft-lbs ± 22 ft-lbs (180 ± 30 Nm)

Carrier bolt(s)..... 331 ft-lbs ± 22 ft-lbs (450 ± 30 Nm)

The ModulT Gen II is a directional caliper. It is important that the correct caliper is installed in relation to the normal wheel / rotor rotation. Each caliper has a rotation arrow cast on the surface of the caliper where the pad retainer seats on the inboard side. Illustration provides a general overview with the rotation shown with a red arrow and the leading slide pin (AL) and the trailing slide pin (AT).

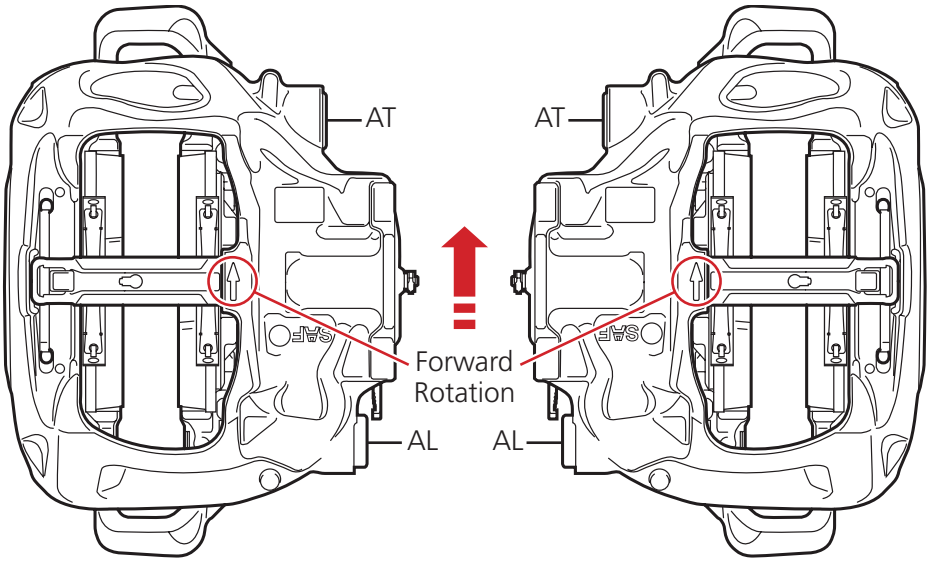

Visual Inspection Points

A visual inspection of the following should be made daily.

1. Check that service brakes are functioning properly before driving.
2. Check the parking brakes are functioning properly by trying to move vehicle with being applied and then released.
3. Check for any damage under unit and running gear.
4. Check for debris in caliper or wheels
5. Check for overheating signs on rotors and calipers.
6. Check for cracks in rotors.
7. Check PWI - Pad wear indicator for pad wear.
8. Check for missing, spring bracket, pad retainer, pad springs, and protective caps

Preventive Maintenance Inspection Intervals

Preventive maintenance inspection intervals, specified in the table below are maximum intervals. Depending on the vehicle application and type of driving, vehicle manufacturer's service/inspection intervals may need to be more frequent.

WARNING This table does not replace the need for daily pre and post trip inspections.

C = Check I = Inspect M = Wheels Mounted R = Wheels Removed	Before First Vehicle Use	Daily	Every 3 Months	Every 12 Months	When System Components are Replaced	ModulT Service Manual Page Reference
Visual Inspection	CM / IM	CM	CM / IM	CM	CM / IM	13
Brake Adjustment Function				CM		31
Safety Check*				CR		17,18 and follow procedures in manual to repair failed part
Brake Pads			IM	IR		19, 20, 21
Brake Rotor			IM	IR		11, 25, 26
Plugs and Protective Cups		CM		IR		38, 39, 40, 41
Thrust Plate Guide Pins	CM	CM	CM	IR		17, 20, 22
Brake Chamber				IR		27, 28, 29, 34, 35
Slide Pin Bellow Seals				IR		21, 37, 38, 39, 40, 41
Thrust Plate Bellow Seals			CM	IR		34, 35, 36
Slide Function				IR		37, 38, 39, 40, 41
Running Clearance				IR		11

* In accordance with industry recommended practices.

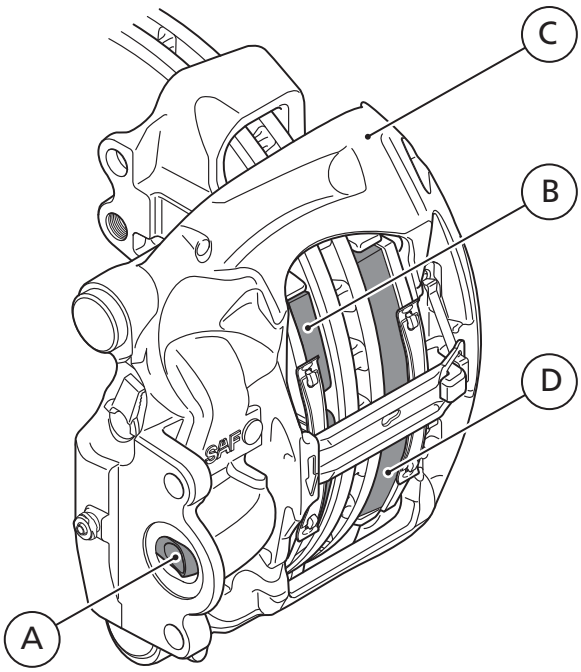

Functional description.

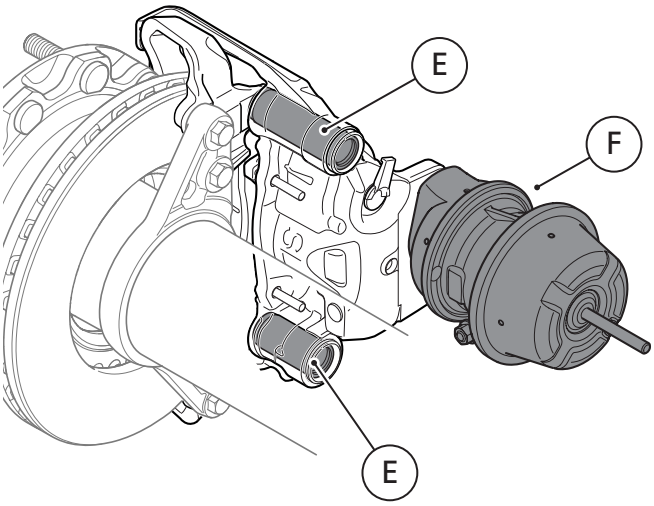

Slide pins and spring brake chamber.

Functional Description

The ModulT features a floating monobloc caliper (C) and an integrated adjustment unit that compensates for brake pad wear. The adjustment unit, which is actuated by the mechanism lever (A), extends the thrust plate and the inner brake pad (B) against the rotor, which then causes the caliper (C) to slide laterally, so that the outer brake pad (D) contacts the rotor. The caliper moves laterally on slide pins (E). In wheel positions where the disc brake also serves as a parking brake, the unit is actuated by a spring brake chamber (F).

Functional Operation

Actuation / Release

During a brake application the mechanism lever is actuated by operation of the brake chamber. The inner section lever presses the cross bar axially towards the rotor. The force is transferred from the cross bar via adjustment sleeves, adjustment screws and thrust plate to the inner pad. As the brake pad contacts the rotor the caliper moves laterally on the slide pins to allow the outer pad to contact the rotor. Upon release, a return spring forces the cross bar back to its rest position, allowing the design clearance between pad and rotor to be achieved.

Automatic Adjustment

Adjustment is based on the clearance principle. The braking sequence is split into three phases: design clearance, excess clearance, and elasticity phase. These phases take place when the brakes are activated and released.

The mechanism lever activates the adjuster unit by means of a guide pin. The clearance between the guide pin and the slot in the adjuster unit housing determines the clearance between the brake pads and the rotor. The adjuster unit in turn rotates the adjustment sleeve which is threaded around the adjustment screw. The adjustment screws are prevented from rotating the adjuster sleeves by guides on the thrust plate. The second adjustment sleeve is synchronized and driven by a gear mechanism which consists of gear wheels attached to each of the two adjustment sleeves plus an intermediate gear wheel.

Application

During and through the forward stroke, the design clearance between pads and rotor is measured. The clearance between the guide pin which is attached to the mechanism lever and the slot in the adjuster unit housing determines the magnitude of the forward stroke before the adjustment process begins.

As the stoke continues if there is any clearance between the rotor and the brake pad when the thrust plate has moved axially through the design clearance the adjust unit rotates the adjuster sleeves. The adjustment screws are held in position by thrust plate and are therefore prevented from turning. Rotation of the adjuster sleeves in relation to the adjustment screws removes a percentage of the measured excess clearance. Within the adjuster mechanism, turning movement is transferred from the housing via adjustment spring, companion sleeve, one-way spring to the adjustment sleeves, which are threaded around the adjustment screws.

When the stroke reaches full extension and the pads contact the rotor, the brake enters the elasticity phase, and the torque increases, the adjuster unit stops adjusting. The continued rotational movement which now occurs in adjuster unit is allowed by rotating housing in relation to adjustment spring.

Release

The first part of the return stroke is a combination of the elasticity phase and design clearance. Any residual part of the return stroke is excess clearance which is adjusted out during the subsequent braking. During the return stroke, return spring ensures the crossbar travels back.

Brake force decreases during the first part of the return stroke. The guide pin moves to the opposite side of the slot in the adjuster unit housing where the transition to the design clearance phase starts.

As the stoke continues to return the adjustment spring and companion flange are rotated in relation to the adjustment sleeve which remains stationary inside the adjuster unit housing. Movement between the companion flange and the adjustment sleeve is taken up by the one-way spring.

During the last part of the return stroke, rotational movement in adjuster unit continues until mechanism reaches its resting position. The brake is now in its rest position.

Wheel-On Inspection Procedures

WARNING Personal safety equipment most be worn when working with equipment.

Brake Caliper Adjuster Inspection

1. Remove the reset shaft protection plug from the caliper.
2. Visually inspect the reset shaft protection plug for damage. Inspect bore of reset shaft for debris or corrosion.
3. Inspect reset shaft for unusual wear or damage.
   - Replace the plug or the reset shaft if there is evidence of wear or damage.
4. Using a T55 Torx (ensure the Torx tool seats fully into reset shaft), rotate the reset shaft clockwise until it stops rotating. The brake pads will be against the rotor. Reverse the reset shaft by de-adjusting and turning it counterclockwise 2 “clicks“. This verifies the operation of the brake caliper adjuster.

Brake Pad Wear Inspection

1. Locate the brake pad wear indicator (PWI) pin and wear gauge on caliper. This will provide a quick visual indication of the total pad wear condition.
   - This does not provide an accurate measurement of the wear on a particular pad (inner or outer), but rather the sum total of wear on both pads. **The indicator cannot be used to determine if the pads are wearing evenly.**
2. Observe that the PWI pin is in comparance to the pad wear indicator marking on the belly of the caliper housing.
   - If PWI pin is flush with caliper, a full wheel-off inspection must be performed to confirm that both pad material and rotor are with acceptable wear limits.

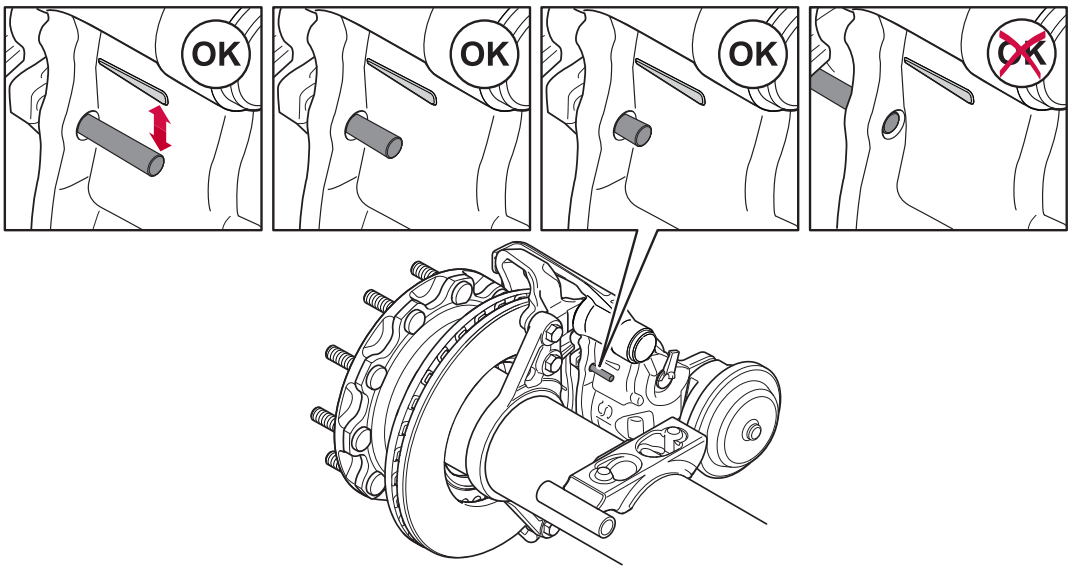

Inspection of the visual wear indicator.

Wheel-Off Inspection Procedures

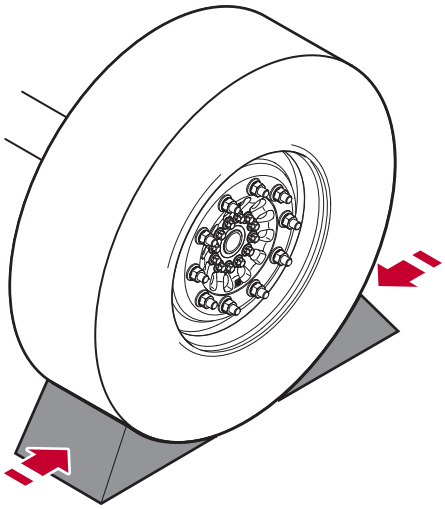

Blocking the wheels.

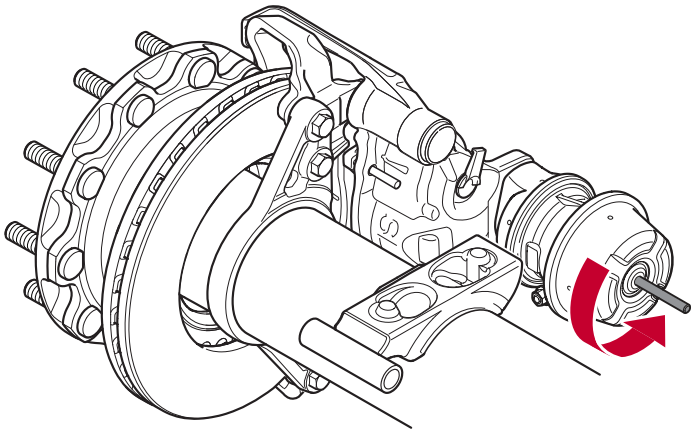

Release parking brake.

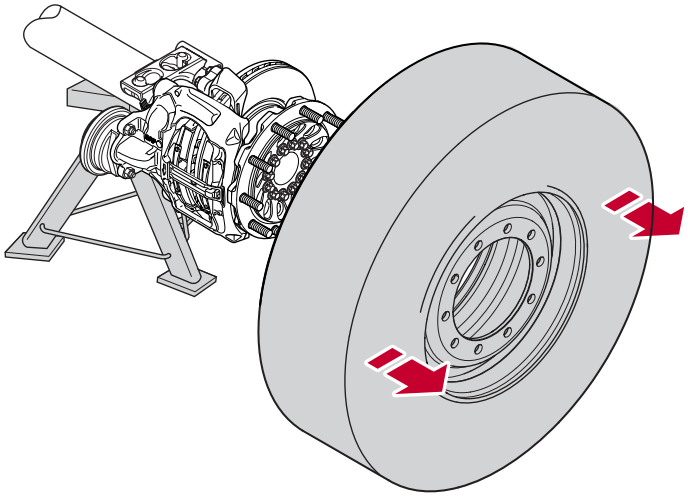

Remove tire / wheel assembly.

WARNING Personal safety equipment most be worn when working with equipment.

Lift up and support the vehicle axle to remove the tire / wheel assembly in accordance with the axle or vehicle recommendations.

1. On a flat even surface, block the wheels.
2. Lift the axles and place on jack stands.
3. Release the parking brake.
4. Check for free rolling resistance of the tire / wheel assembly. If the resistance is higher than expected, tap the tire to remove the rest tension. If the wheel still does not rotate freely then further inspection is needed.
5. Remove the lug nuts.
6. Remove the tire / wheel assembly.

Brake Caliper and Pad Inspection

WARNING Personal safety equipment most be worn when working with equipment.

1. Clean dirt and / or debris from surfaces, if necessary.
2. Check for signs of excessive heat exposure, discoloration, debris, etc.
3. The slide pin protection cups, reset shaft sealing plug, and caliper seal protection plug must be present and intact.
   a. The caliper seal protection plug (A) will never be removed. If missing, replace caliper assembly.
4. Remove the reset shaft sealing plug from the caliper.
   a. Visually inspect the plug for damage. Inspect bore of reset shaft for debris.
5. Inspect reset shaft for unusual wear or damage.
   a. Replace the reset shaft sealing plug or the reset shaft if there is evidence of wear or damage. Refer to reset shaft replacement section.
6. Insert two feeler gauges in between the caliper and the outer brake pad to measure the clearance. Position the feeler gauges in the upper and lower part of the brake pad back plate so an average clearance is measured.
   a. The normal running clearance is between 0.03 in – 0.04 in (0.7mm – 1.1mm). If there is no movement or the clearance is too small or too large refer to the fault-finding section.

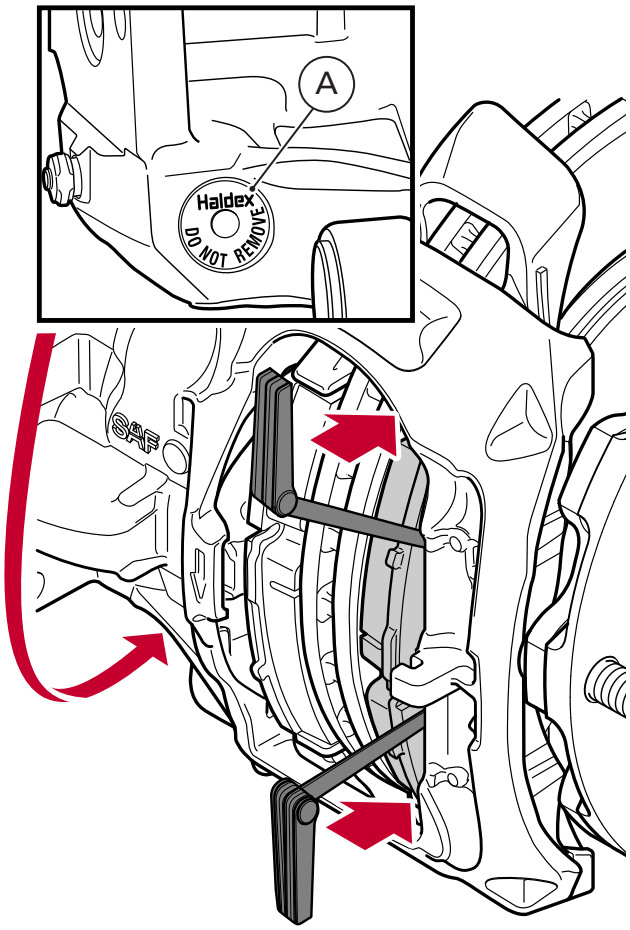

Correct location of the feeler gauges.

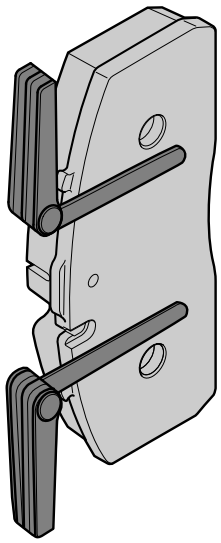

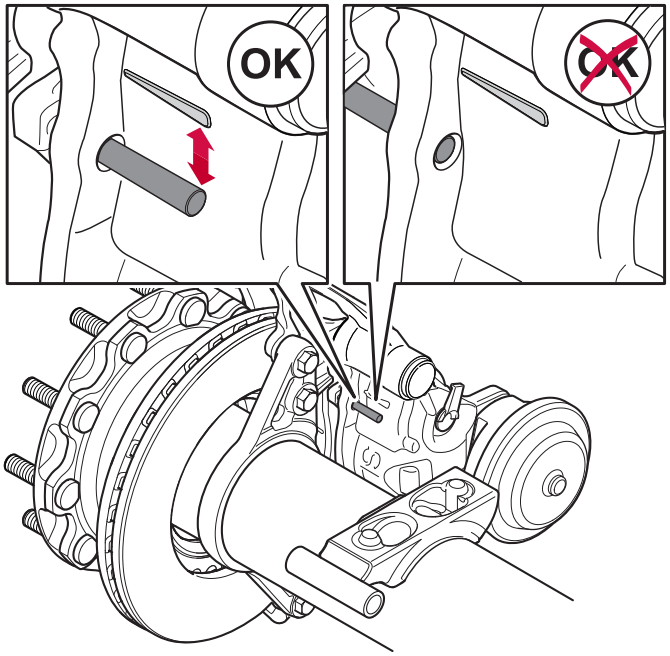

Inspection of the visual wear indicator.

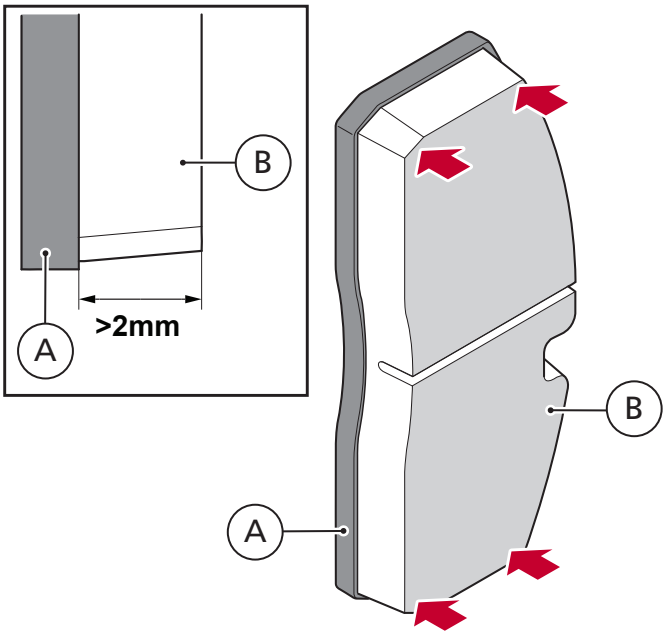

Measuring the pad wear condition.

⚠ WARNING Personal safety equipment most be worn when working with equipment.

7. Remove the feeler gauges.
8. Reverse the reset shaft by de-adjusting and turning it counterclockwise 2 "clicks."
   a. Note: If further inspection of the brake caliper adjuster mechanism is needed refer to function test section.
9. Inspect the position of the pad wear indicator (PWI). The VWI provides an indication of total pad wear. Refer to percentage of wear specs on page 17, "Brake Pad Wear Inspection."
   a. Look for unusual conditions like excessive corrosion and high heat cycles.
10. Inspect that the two thrust plate pins are in their correct position. If pins are damaged or missing, refer to pages 34, 35 and 36 to replace thrust plate.
11. Inspect that the thrust plate with guide pins are free to move without obstruction.
12. On both brake pads measure the distance from back plate to wear surface of the brake pad in four places.
    a. Minimum lining thickness (friction material) is 0.08 in (2mm).
13. Measure and compare differential brake pad thickness between the inner and outer brake pads. Up to 0.12 in (3mm) difference is acceptable.
14. Check the condition of the back plate.
15. Replace brake pads if they are worn out or if they are expected to be so before the next inspection.

Brake Pad Replacement

WARNING Personal safety equipment most be worn when working with equipment.

Removal

IMPORTANT!
Always remove the outer brake pad first.
Always install the inner brake pad first.

1. Using a T55 Torx, manually turn the reset shaft counterclockwise to de-adjust the brake so that the thrust plate fully retracts to its inner position.
   a. An audible clicking sound will be felt and heard when de-adjusting. The stop of the fully retracted inner thrust plate position must be distinct, but do not exceed 15 ft-lbs. (20Nm) in torque or leave it tightened in this position.
2. Remove the pad retainer (B) by first pushing and holding down the spring bracket (A), while the spring bracket is held down, slide in and remove the pad retainer. A tool can be used to help slide in the pad retainer if unable to remove by hand.
3. Remove the two pad springs (C).
4. Remove the brake pads. Always remove the outer brake pad first (D), followed by the inner brake pad (E).
   a. The inner brake pad back plate locates on two holes which mate to the thrust plate, therefore the pad cannot be removed with the outer pad still being in place. Once the outer pad is removed, the caliper can be slid laterally to allow for the inner pad removal (E).
5. Remove the pad retainer spring bracket (A).

Slide Pin Bellows Inspection

1. Inspect both the leading slide pin and trailing slide pin bellows for signs of damage, punctures, or tears.
   a. If the bellows are damaged replace as necessary with Haldex replacement parts, refer to caliper rebuild section.

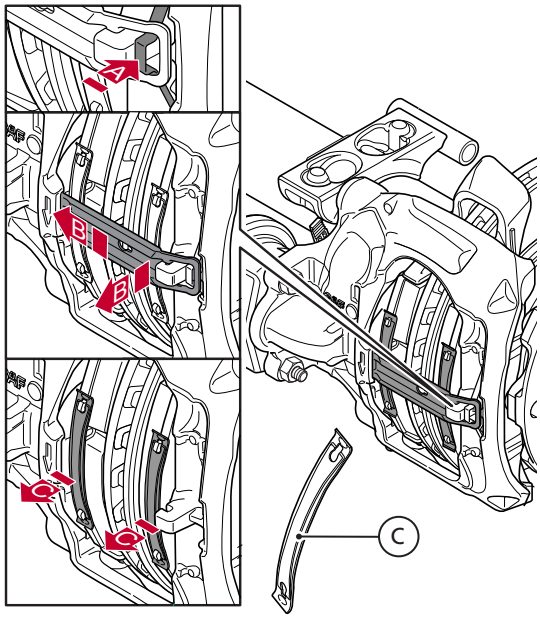

Remove pad retainer and pad springs.

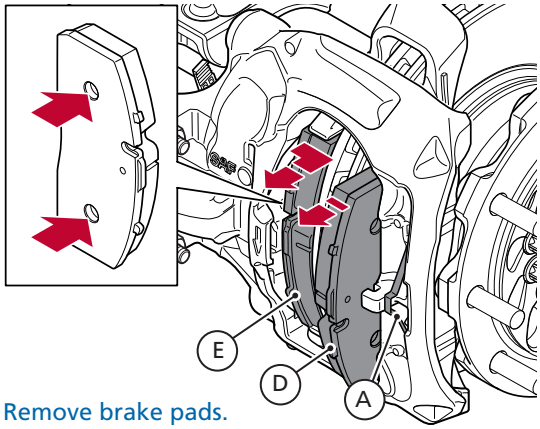

Remove brake pads.

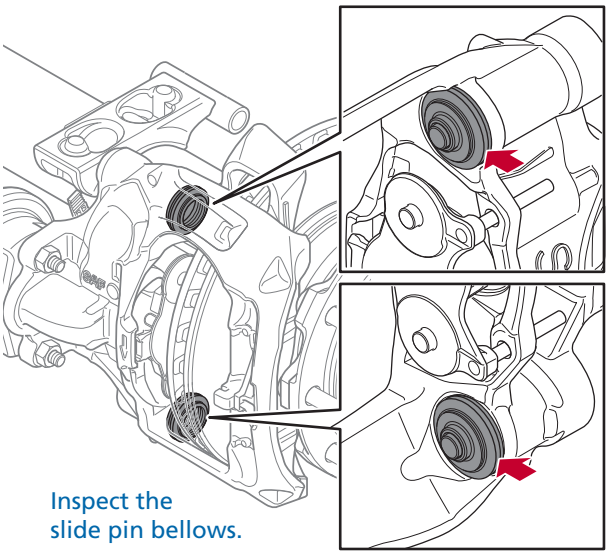
Inspect the slide pin bellows.

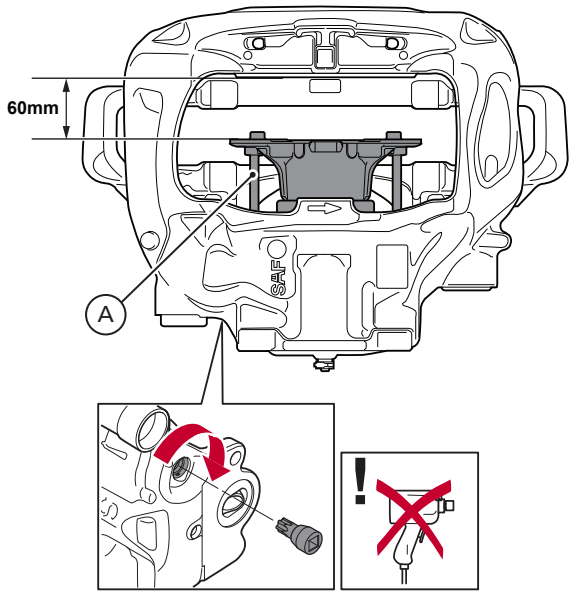

Extend thrust plate for bellows inspection.

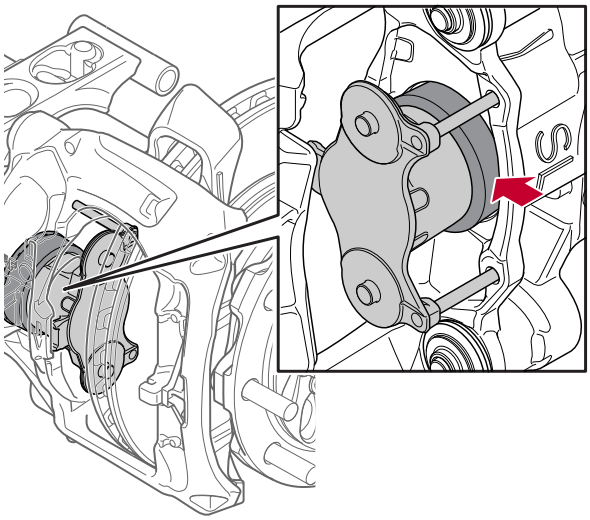

Inspect the thrust plate bellows.

Thrust Plate and Thrust Plate Bellows Inspection

WARNING Personal safety equipment most be worn when working with equipment.

Note: Do Not Over Adjust / Extend the thrust plate during the inspection procedure. Over adjustment / extension will cause the thrust plate to disengage from the mechanism and if done unintentionally may cause damage to the thrust plat bellow. Minimum distance between the caliper and thrust plate is 2.4 in (60mm).

1. Using a T55 Torx, manually turn the reset shaft clockwise to adjust the brake so that the thrust plate is extended, and the bellow can be viewed. Stop adjusting / extending when the distance between the inner pad face of the thrust plate and outer pad face on the caliper is 2.4 in (60mm).
2. Inspect the thrust plate bellow for signs of damage, punctures, or tears.
   a. If the bellow is damaged replace as necessary, refer to caliper rebuild section (page 34).
3. If the bellow is in operational condition, manually de-adjust the thrust plate by turning the T55 Torx reset shaft counterclockwise until the position required to reinstall the brake pads.

Caliper Slide Function Inspection

1. With the brake pads removed; move the caliper by hand back and forth to check for slide pin movement. The caliper must be free to slide on the leading and trailing slide pins.
2. If the movement is felt to be obstructed or out of specification for the slide function, then further inspection is required.
3. If it is determined that the slide pins need replacement, refer to caliper rebuild section.

Note: Obstruction of the slide function can cause operational problems like hot brakes and uneven brake pad wear. It is important that all debris must be cleaned away from caliper moving components to ensure free movement.

WARNING Personal safety equipment most be worn when working with equipment.

Installation

IMPORTANT!
Level N friction may be used in ModulT Gen I, but previous level A or B friction cannot be used in Gen II.

N Level Friction meets 2025 Legislation to eliminate copper to a level of less that 0.05%. For information, see Better Brake Law.

1. Ensure the brake caliper is fully de-adjusted before installing new brake pads.
2. Check all contact surfaces on the carrier, caliper, and thrust plate are free from dirt and corrosion.
   a. Clean if necessary.
3. Check abutment area on carrier for deep grooves, cracks, or deformation.
   a. Replace carrier if grooves exceed 3mm or has cracks and deformation.
4. Install the inner brake pad into the caliper.
   a. Note: The inner brake pad locates onto the thrust plate on two points.
5. Install the outer brake pad into the caliper.
   a. Note: Ensure the friction material faces the rotor.
6. Install the new spring bracket into the caliper and ensure it is seated in the correct position.
7. Install the new pad springs and the pad retainer.
   a. Note: The pad retainer is fitted by first locating the pad retainer in the housing end in the caliper aperture, then compressing the pad springs and locating the pad retainer slot over the caliper latch, and finally sliding the pad retainer under the caliper latch until the spring bracket pops into its locking position. If necessary, use a tool to help push the pad retainer into position.
8. Using a T55 Torx, manually adjust the brake by turning the reset shaft clockwise until the pads touch the rotor and you feel an end stop.
9. Then turn the reset shaft counterclockwise 2 clicks.
   a. This procedure sets the initial brake pad clearance.
10. Fit the reset shaft protective plug into the caliper, ensure it is correctly orientated and pushed fully into its correct sealing position. Failure to do so may compromise the life of the brake.

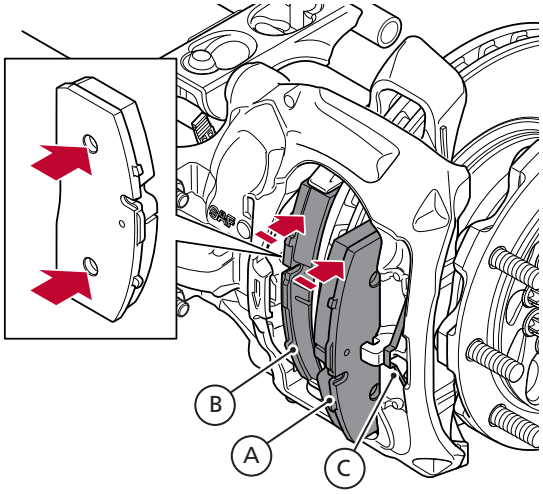

Replace brake pads.

WARNING Personal safety equipment most be worn when working with equipment.

IMPORTANT!
Always install the inner brake pad first.

IMPORTANT!
Ensure that friction material faces the rotor.

IMPORTANT!
Use new parts in pad kit. Do not reuse old parts.

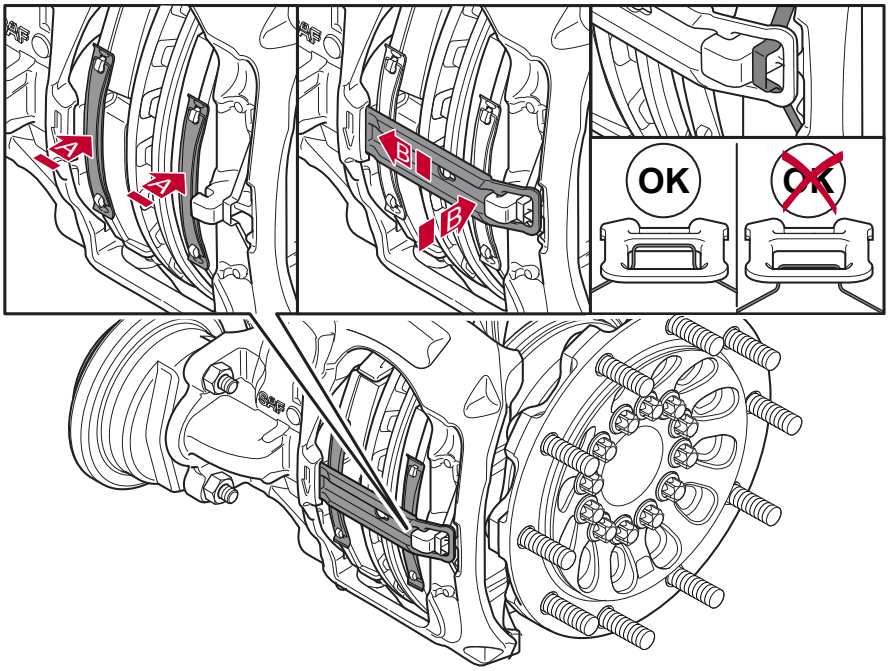

Install new pad springs and pad retainer

Rotor Health

WARNING Personal safety equipment most be worn when working with equipment.

Rotor Inspection

1. Look for wear, damages, and cracks on the brake rotor surfaces. Cracks that enter the cooling ducts via the outer or inner radius are not permitted.
2. Measure the thickness of the brake rotor using a brake micrometer or slide caliper. If the brake rotor has a wear ridge, the measurement can be performed using two spacers (B) (e.g. .25 in (5 mm) thick flat washers). Reduce the measured dimension by the total thickness of the two spacers (B).

A rotor's thickness should be measured in three places; the center, middle and outer edge of the rotor, using a micrometer. Replace rotor if thickness varies more than 0.005" (.12mm) between any two points.

Minimum permitted thickness of a brake rotor is 1.5 in (37 mm). A rotor must be replaced if the wear limit has been exceeded. If resurfacing is necessary, be sure that at least 0.060" of material remains above the minimum rotor thickness for operating wear.

In addition to regular surface wear, disc brake rotors are subject to extreme temperature and torque on every application – and are often exposed to dirt, grease, salt, chemicals and other vocational hazards. The following notes will help you identify and address rotor conditions before they become problems.

Martensite Spotting

Extreme heat may cause changes to the metallic substructure of a rotor. Rotors may develop martensite; dark heat spots on the rotor that are hard, raised and brittle. Rotors in this condition should be replaced.

Lining Transfer

High operating temperatures or improper lining material may result in brake lining transfer, in which a layer of pad material becomes welded to the rotor surface. Buildup may be removed by resurfacing the brake rotor.

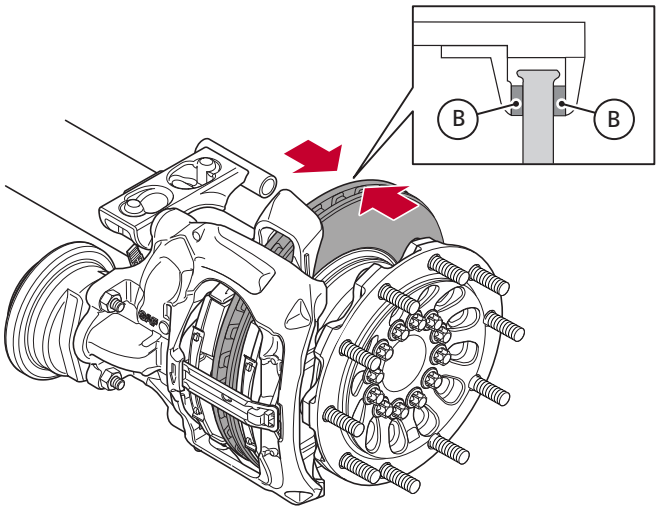

Acceptable crack length; less than 75% of swept width.

Unacceptable crack length; more than 75% of swept width.

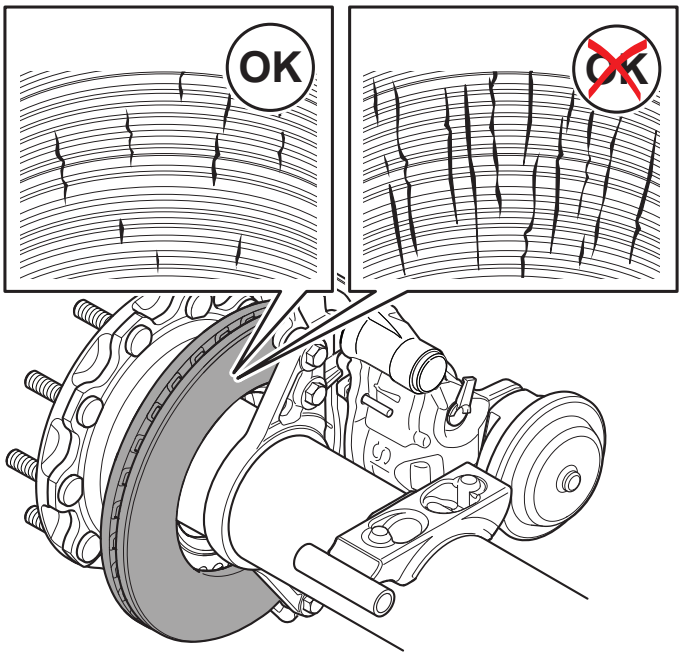

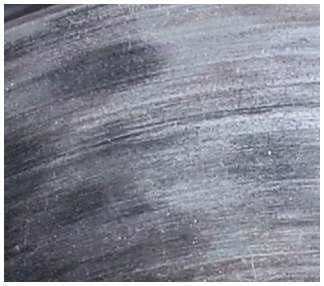

Martensite spotting.

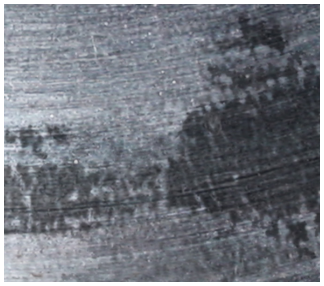

Lining transfer.

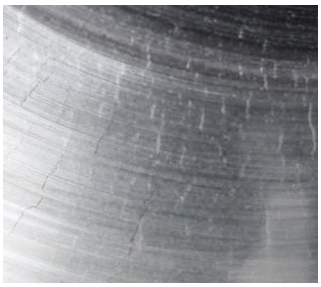

Light heat checking.

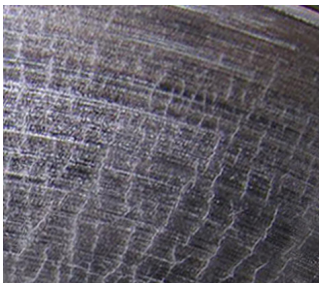

Heavy heat checking.

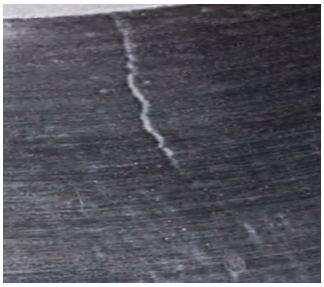

Acceptable cracking.

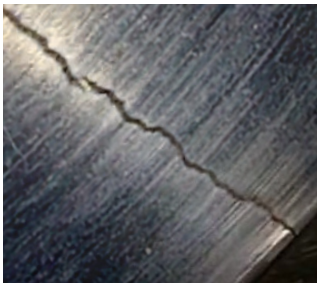

Unacceptable cracking.

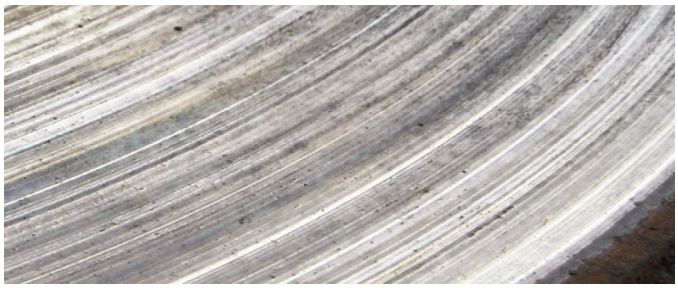

Grooving and scoring.

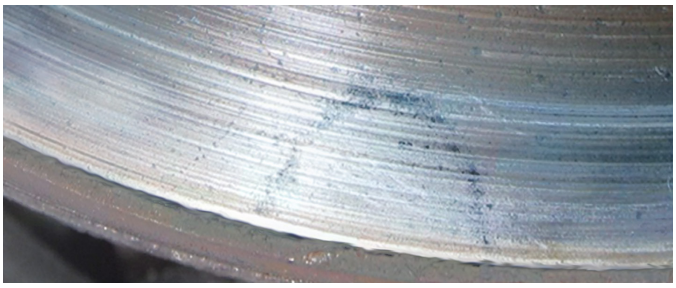

Bluing and banding.

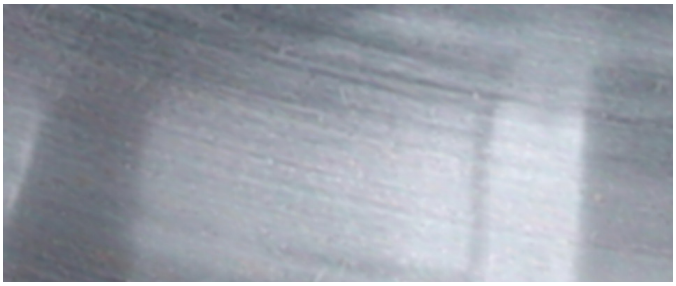

Polishing.

Heat Checking

Checking is a common condition caused by repeated heating and cooling of braking surfaces. Heat checks are short, thin, radial interruptions in the braking surface resembling multiple small and medium-size cracks.

Cracking

Heat checks may wear away with use or may become actual cracks or fractures in the rotor.

Replace rotors if cracks become over 0.060″ (1.5mm) wide, over 0.060″ (1.5mm) deep or extend over 75% of the rotor surface.

Rotor cracking may be caused by mishandling, brake imbalance, wear beyond thickness tolerance, or improper operation. Replace rotor if a crack extends through the brake surface or the mounting section.

A cracked rotor that is still considered operational should be re-inspected regularly to ensure a crack has not expanded.

Grooving and Scoring

Scores or grooves are often caused by contaminants between linings and rotors, worn linings, or lining plate contact. Replace rotor if the groove exceeds 0.060″ deep or compromises minimum thickness for the rotor.

Bluing and Banding

Brakes operating at continued high temperatures may cause rotors to be discolored with blue marks or bands. It is not necessary to replace discolored rotors that still meet thickness specifications, but the cause of overheating should be identified and repaired.

Polishing

Rotors may exhibit a mirror-like braking surface, caused by lightly dragging brakes or improper pad selection. To correct polishing, sand the rotor surface and brake pads with 80 grit emery cloth.

Brake Chamber

Water and moisture entering into the caliper cavity can reduce the component's life expectancy.

Prevent water entering by using the correct brake chamber. Ensure the internal bellows (A) and the seal (B) between the brake chamber and caliper is undamaged. Also, make sure the brake chamber vent holes are unobstructed

At a minimum, the downward-facing drain holes must be open and free of obstruction. Other drain plugs can remain intact.

The ModulT Gen II DBT22LT uses either a 2.25" (57mm) or 2.5" (65mm) stroke brake chamber with a pushrod resting length of 15mm.

If an incorrect brake chamber is installed with an incorrect pushrod dimension, a partial brake application can occur that will result in a dragging brake.

WARNING Personal safety equipment most be worn when working with equipment.

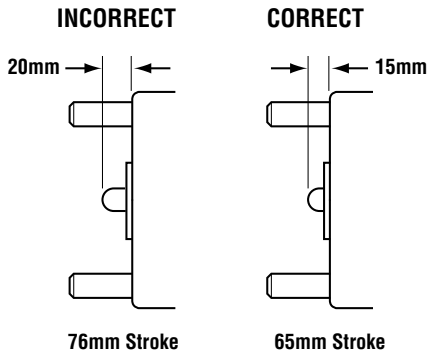

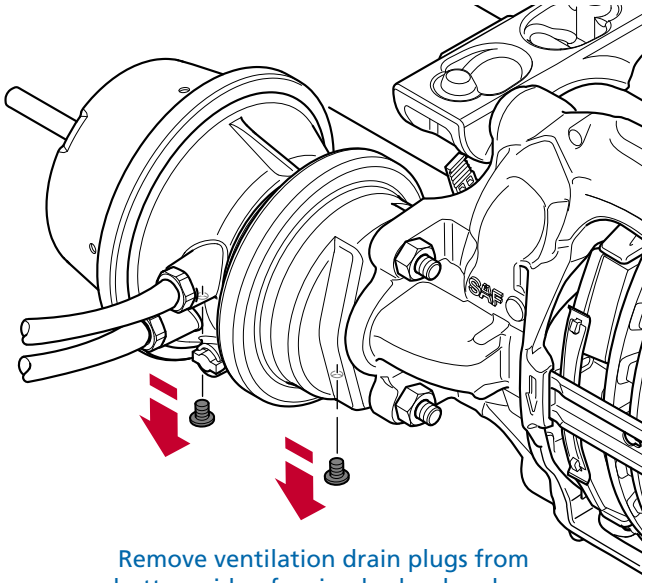

Remove ventilation drain plugs from bottom side of spring brake chamber.

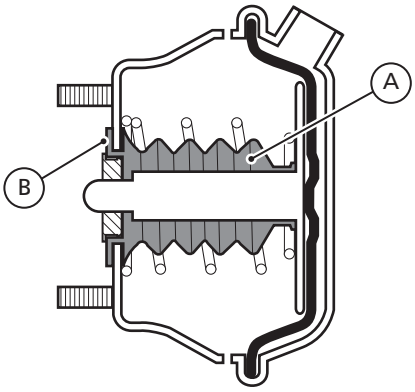

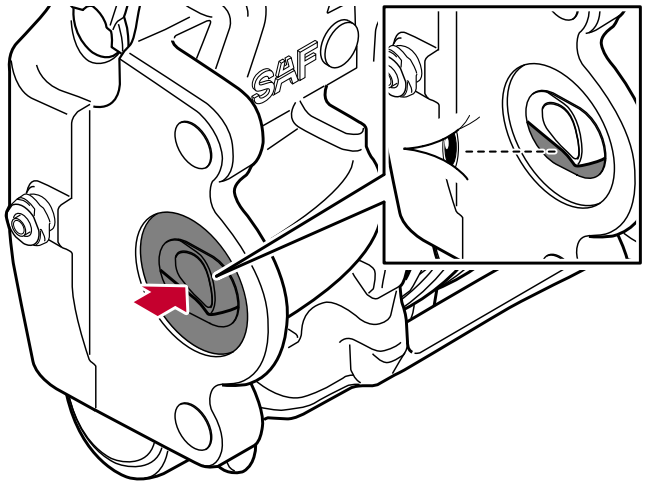

Inspect ball cup and seal of brake chamber lever.

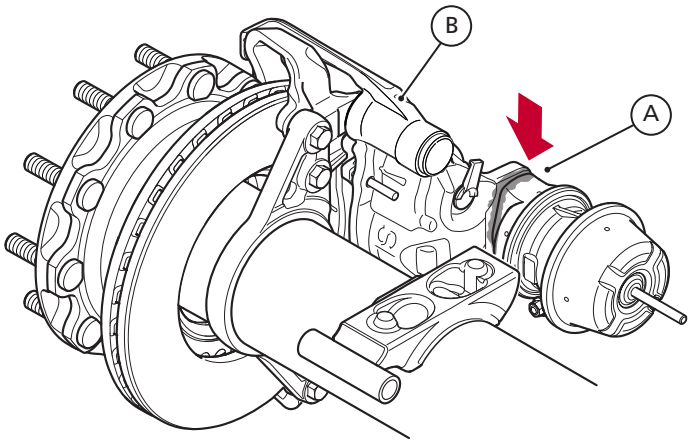

Clean mating surfaces of brake and chamber.

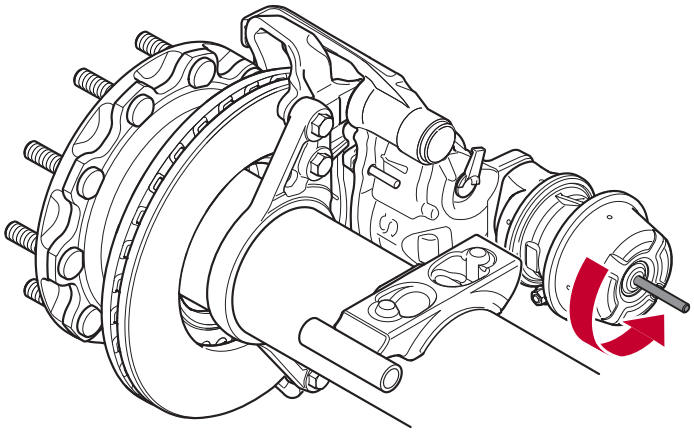

Secure brake chamber in the released position.

WARNING Personal safety equipment most be worn when working with equipment.

Brake Chamber Removal

1. Carefully clean around the mating surfaces of the brake chamber (A) and the caliper (B) to ensure that dirt does not get into the mechanism area when removing the brake chamber.
2. If applicable, ensure that the spring brake chamber (F) is fully disengaged and mechanically secured in the released position.
3. Ensure that the brake chamber (A) is depressurized.
4. Mark and remove the hose connections of the service brake (C) and if applicable the parking brake (D).
5. Remove the two nuts (E) holding the brake chamber. Remove the brake chamber (A) from the caliper (B).

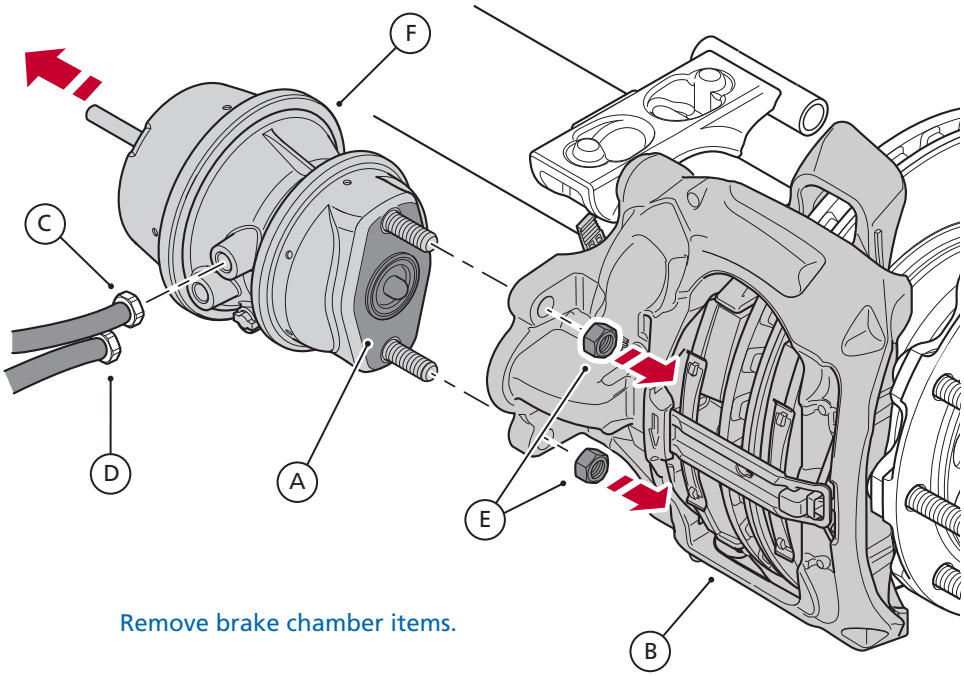

Remove brake chamber items.

⚠ WARNING Personal safety equipment most be worn when working with equipment.

Brake Chamber Installation

1. Ensure the brake chamber being installed is the correct one for the application and vehicle. If a spring brake chamber is being installed, ensure that the parking brake spring is caged in accordance with the manufacturer's instructions.
2. Ensure the surface of the caliper that mates with the brake chamber is free from dirt, moisture and corrosion. Do the same check on the brake chambers mating face (A) and seal.

   Ensure the brake chamber seal is in the correct position and not damaged.
3. Apply a small amount of general-purpose grease in the ball cup of the brake chamber lever. Do not overfill the cup or let grease fall inside the brake.
4. Fit the new brake chamber (A) to the caliper (B) with nuts (E). Screw the nuts home first before torque tightening to ensure the brake chamber seats parallel.
5. Brake chamber fixation nut tightening torque is 130 ft-lbs. ± 15 ft-lbs. (180 ± 20 Nm). Follow the vehicle/axle manufacturers recommendations.
6. Fit the brake chamber hose connection of the service brake (C) and if applicable the parking brake (D). If fitting both hoses, ensure connections (C) and (D) are the correct way around.
7. Remove the ventilation drain plug that faces downwards from the service brake housing and if applicable, also from the spring brake housing.
8. If applicable, release the parking brake and disengage the spring brake chamber's caging mechanism so that the spring is released. Minimum 90 psi (6 bar).
9. With the service brake engaged and, where applicable, with the parking brake released, check the brake chambers, hoses and connections for leaks or damage.

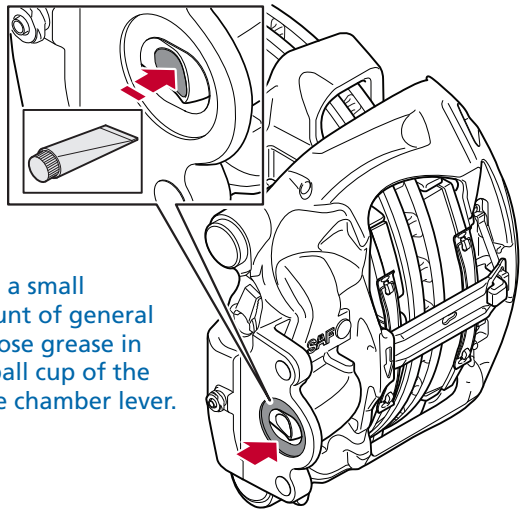

Place a small amount of general purpose grease in the ball cup of the brake chamber lever.

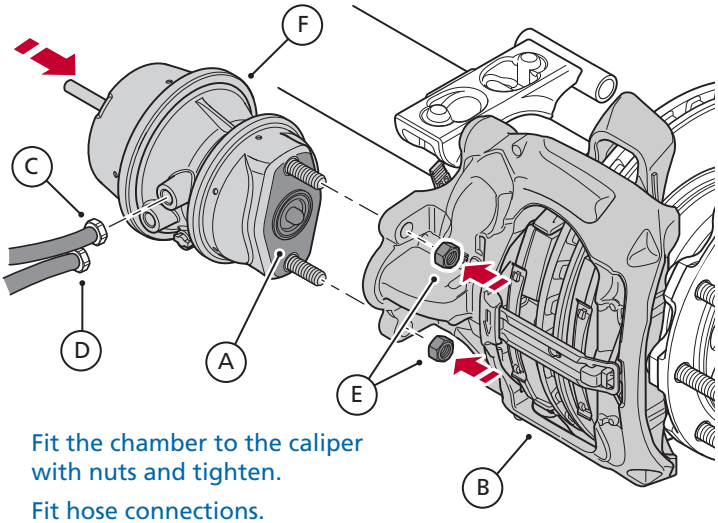

Fit the chamber to the caliper with nuts and tighten.

Fit hose connections.

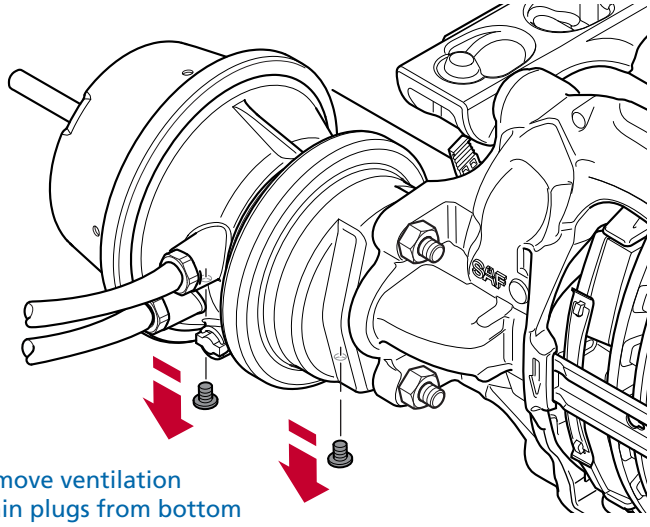

Remove ventilation drain plugs from bottom side of spring brake chamber.

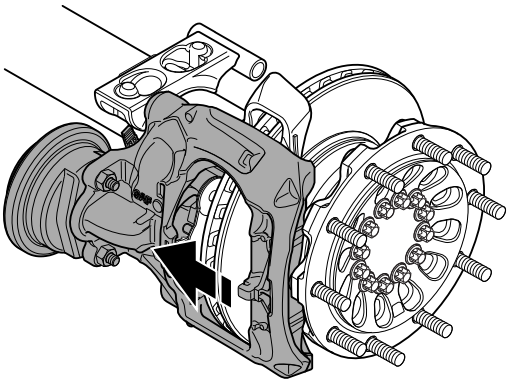

Push brake caliper to inner position.

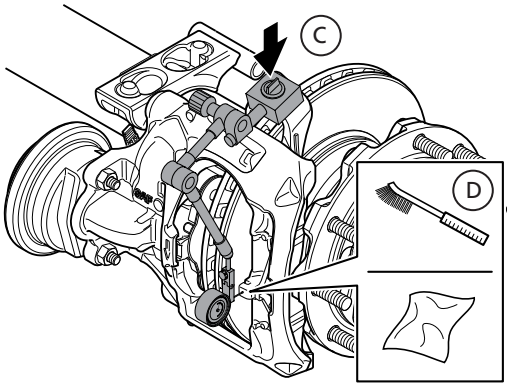

Place dial indicator on carrier.
Clean the measuring point.

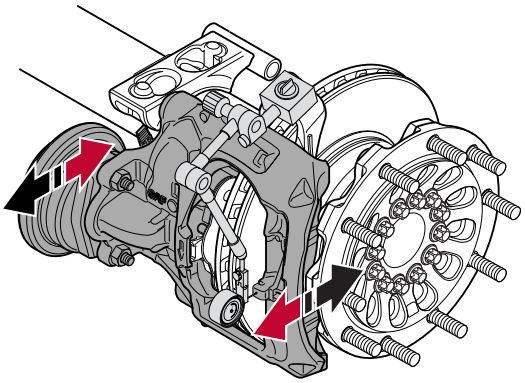

Measure play.

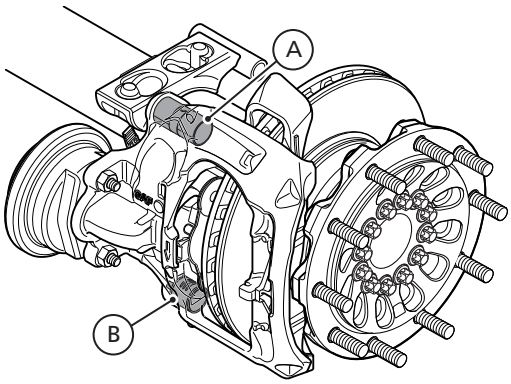

(A) Leading bushing. (B) Trailing bushing.

Slide Function Movement Measurement

Measurement:

1. With pads removed, push the caliper by hand as far as possible to inside of trailer.
2. Place the dial indicator on the carrier (position C) and clean the measuring point (D) with a cloth and place the dial indicator for measurement in position D.
3. Tilt the caliper in the direction of the black arrows (No high force is required).
4. Set the dial indicator to zero.
5. Now tilt the caliper in the direction of the red arrows and read the measured play on the dial indicator.
6. If the bushing play measures over 0.08 / 2mm; the bushing needs to be replaced. The trailing bushing is made of a soft composite material. If a metallic sound is audible from the trailing bushing it must be replaced.

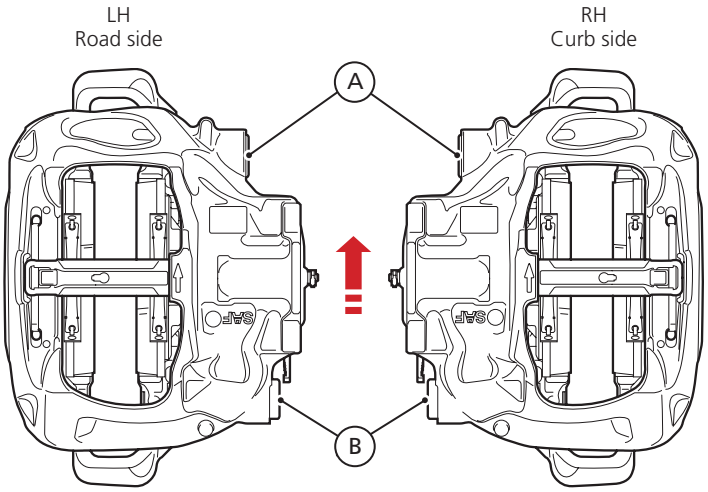

(A) Leading bushing. (B) Trailing bushing.

Adjuster Mechanism Function Test

Test of Adjustment Unit

Note: The function test can be carried out with the wheel installed or removed.

1. If not removed in a previous step, remove the reset shaft protection plug.
2. Using a T55 Torx, de-adjust the brake by turning the reset shaft counterclockwise until an audible clicking sound is felt and heard when de-adjusting. This generally will be 4-5 "clicks". The stop of the fully retracted inner thrust plate position must be distinct, but do not exceed 15 ft-lbs. (20Nm) in torque or leave it tightened in this position.
3. Leave the T55 Torx in position in the reset shaft.
4. Actuate the brakes 5 times by pressing and releasing the vehicles brake pedal through its full stroke. If a brake chamber is not installed, then actuate the brake chamber lever manually with a suitable tool.
5. The T55 Torx must rotate clockwise on each actuation, showing that the automatic adjustment function is working.
   - If the T55 Torx rotates back and forth or not at all, then the adjustment function is not working correctly.
6. To verify faulty adjustment function, manually adjust the reset shaft by turning the T55 Torx clockwise 360 degrees, and then counterclockwise 180 degrees to ensure the adjuster is not jammed at the full de-adjust position.
   - Also, note that once the excessive clearance is taken up by the adjuster the T55 Torx will naturally stop rotating. If in doubt, turn the T55 Torx counterclockwise 180 degrees and then press the brake pedal again to check.
7. If the T55 Torx still rotates back and forth during actuation, then the adjustment function is defective, and the caliper must be replaced.

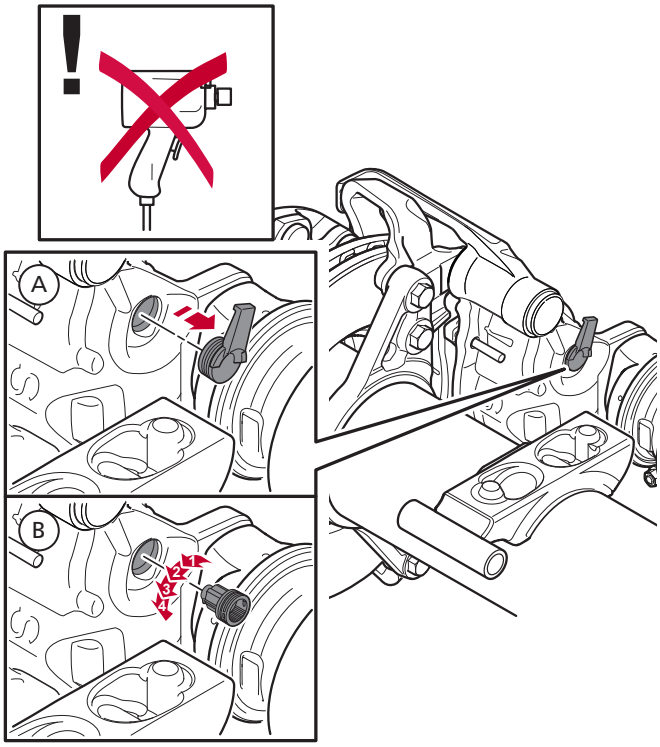

De-adjustment of the reset shaft.

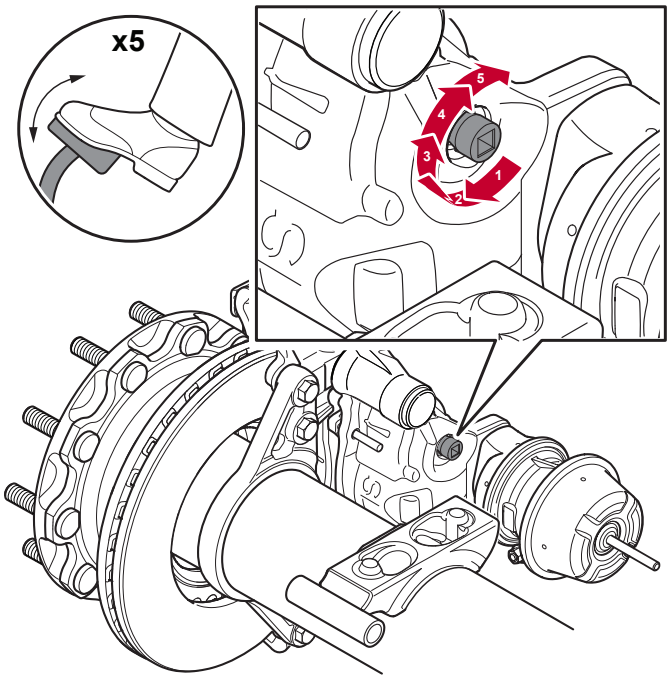

Brake actuation.

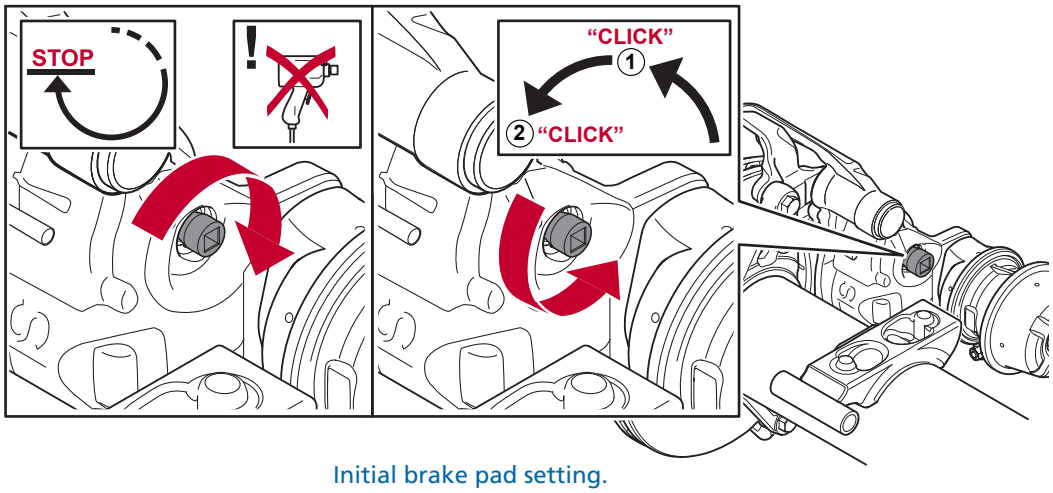

Initial brake pad setting.

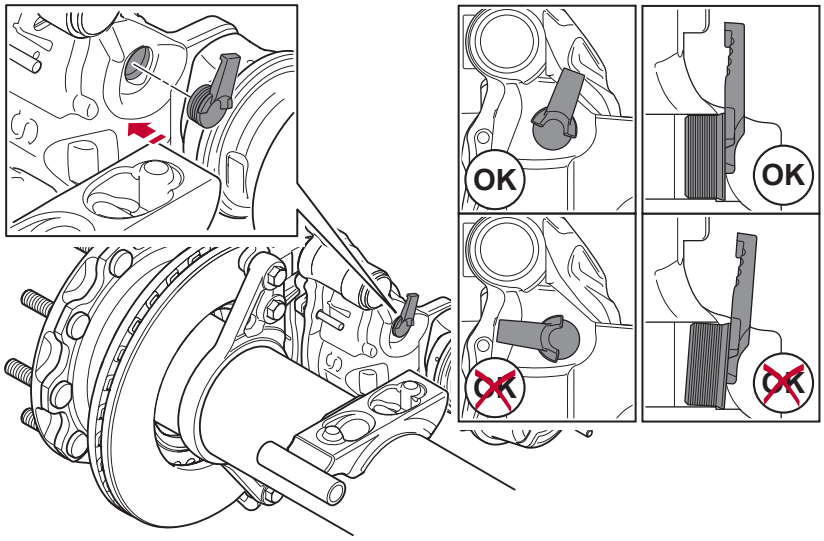

Correct fitment
of protective plug

WARNING Personal safety equipment most be worn when working with equipment.

IMPORTANT!
Leaving the reset shaft tightened in the de-adjust position could stop the adjustment function from working. After reaching the end stop position always adjust by turning the reset shaft clockwise 90 degrees, to activate the adjustment function.

WARNING Personal safety equipment most be worn when working with equipment.

Mounting of the Wheel

IMPORTANT!
Make sure that the brake hoses are in good condition, that they are layed/ducted and fastened correctly.

1. Check the free rolling resistance. The disc brake must not be obstructed in any way.
2. Mount the wheel.

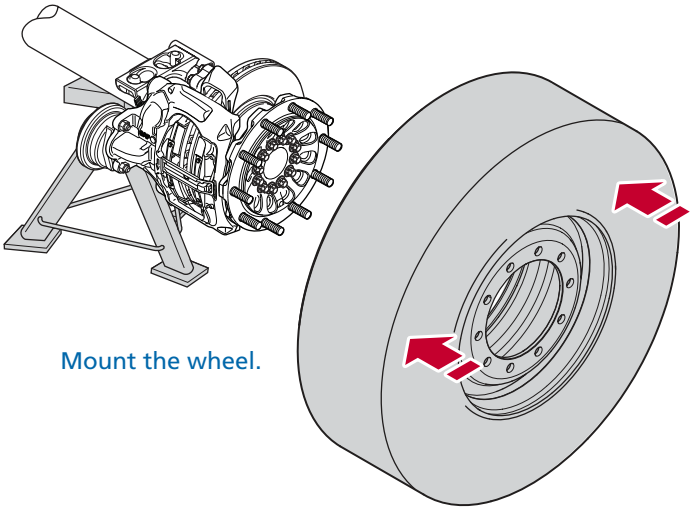

Mount the wheel.

IMPORTANT!
If the disc brake is equipped with a parking brake actuator, ensure that the brake system is pressurized, and the spring brake chamber is fully engaged and mechanically secured in the active position. See the vehicle manufacturer's instructions.

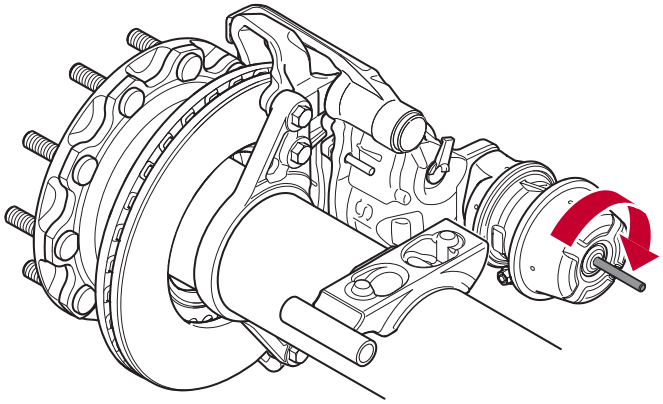

Secure spring brake in the active position.

IMPORTANT!
Apply air to the parking brake. Make sure that there is sufficient air in the system (min. 6 bar).

Lowering of the vehicle axle

1. Activate the parking brake if fitted with a spring brake chamber.
2. Lift the axles so that the stands can be removed.
3. Carefully lower the vehicle to the ground.
4. Remove the wheel blocks.

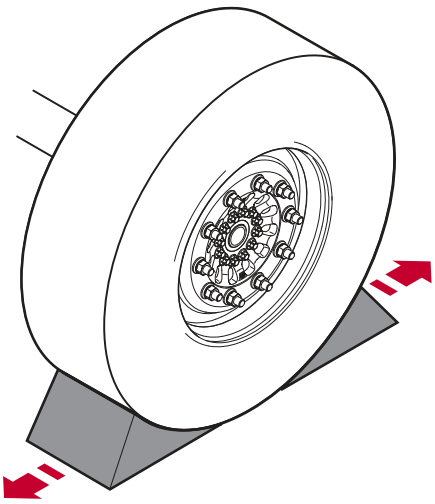

Remove the stops.

Caliper Overhaul

WARNING Personal safety equipment most be worn when working with equipment.

Remove Thrust Plate Bellows

1. Fasten the disc brake securely in a vise with soft jaws. Ensure that the jaws of the vice do not damage the caliper.
2. Using a T55 Torx, manually turn the reset shaft clockwise to extract the thrust plate (A). Continue extracting until the thrust plate unscrews fully and becomes detached from the adjustment spindle.

   The point at which the thrust plate becomes detached is when the gap between the thrust plate inner pad face and the caliper outer pad face becomes smaller than 2 in (52 mm).
3. Be careful when removing the thrust plate to not damage its internal threads or the external thread of the adjustment spindle.
4. Once the thrust plate becomes detached from the adjustment spindle, by hand pull off the thrust plate bellows from the thrust plate and caliper. Do not use any tools for this removal because damaging the sealing surfaces could cause water penetration leakage or seal corrosion upon reassembly.
5. Clean the thrust plate, thrust plate internal threads, thrust plate bellows sealing surfaces in the caliper. Ensure the parts are free from dirt, dust, debris, moisture, and corrosion.

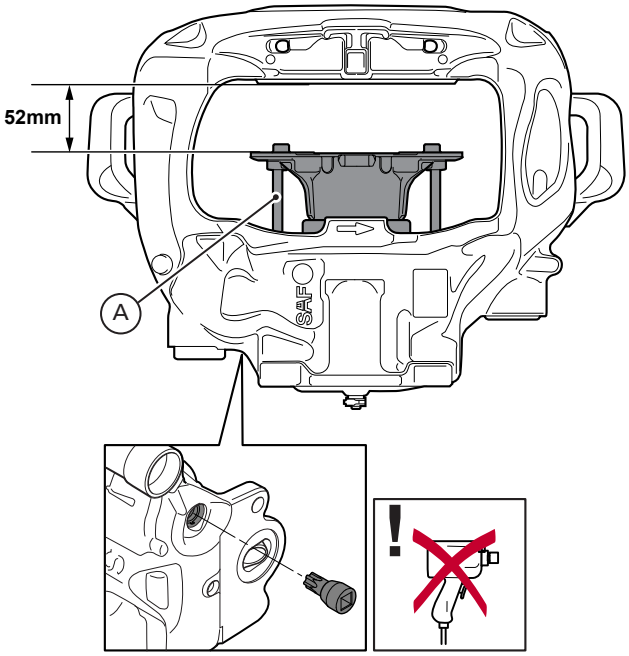

Extract the thrust plate.

IMPORTANT!
Use a vacuum cleaner to clean surfaces. Do not use compressed air.

IMPORTANT!
Take care with chemicals and cleaning tools to avoid damage or displacement of hoses, seals and other components.

IMPORTANT!
Make sure that dirt and impurities do not enter the adjustment spindle opening.

WARNING Personal safety equipment most be worn when working with equipment.

Install Thrust Plate Bellows

IMPORTANT!
Make sure that the brake hoses are in good condition, that they are layed/ducted and fastened correctly.

1. Fasten the thrust plate in a vise with soft jaws. Take caution to not over tighten or damage the thrust plate.
2. Using Haldex tool P/N 95224 (C), firmly press the thrust plate bellows (A) into position on the thrust plate (B).

   Verify the bellows is correctly seated in position on the thrust plate.
3. Apply the grease supplied with the replacement parts kit to the internal thread of the thrust plate and the external thread of the adjustment spindle.
4. Remove the thrust plate from the vise.
5. By hand, hold the thrust plate in position against the adjustment spindle. Using a T55 Torx inserted into the reset shaft, carefully turn counterclockwise, as the thrust plate turns, carefully engage the thrust plate threads onto the adjustment spindle.
   - Be careful not to cross thread the parts, if the thread becomes tight or locks, turn the reset shaft clockwise to release the thrust plate, then try again.
   - A clicking sound will be heard and felt when turning the reset shaft counterclockwise.
6. Shortly after the threads are engaged ensure that the two thrust plate guide pins correctly locate in their caliper holes.
7. Continue to retract the thrust plate until the dimension between the thrust plate inner pad face and the caliper outer pad face is 70 mm.

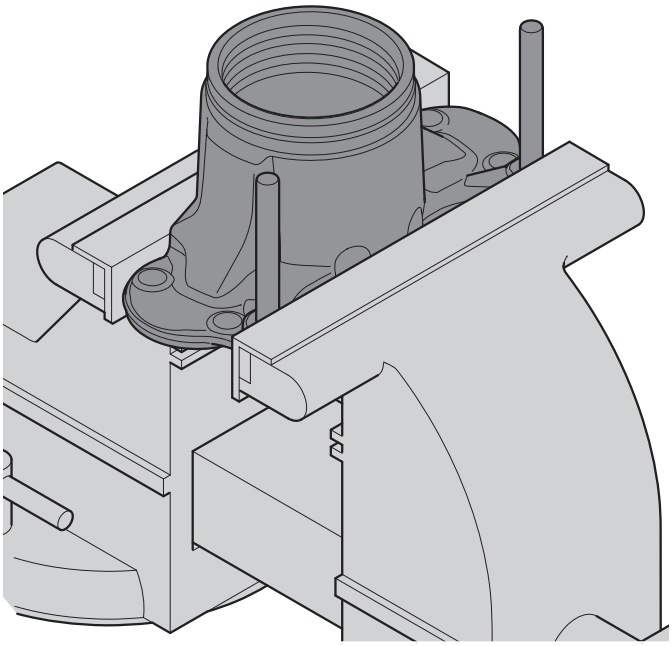

Clamping arrangement for thrust plate.

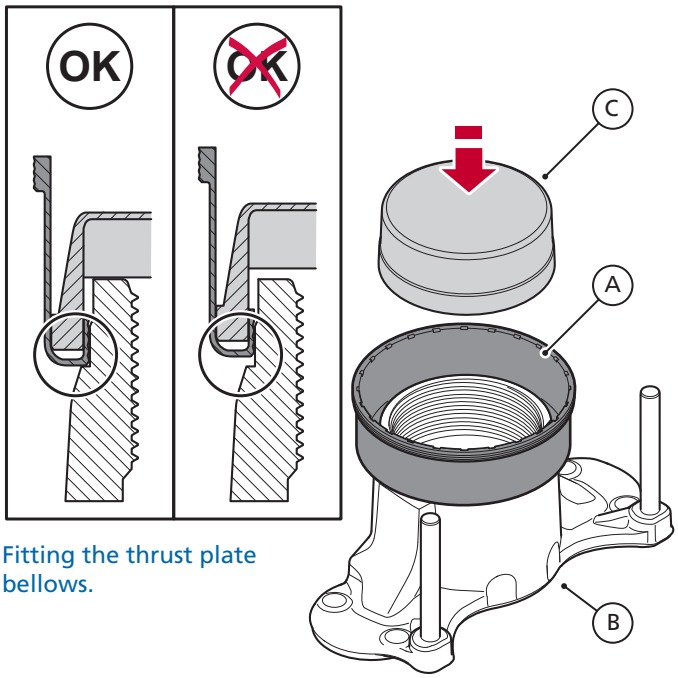

Fitting the thrust plate bellows.

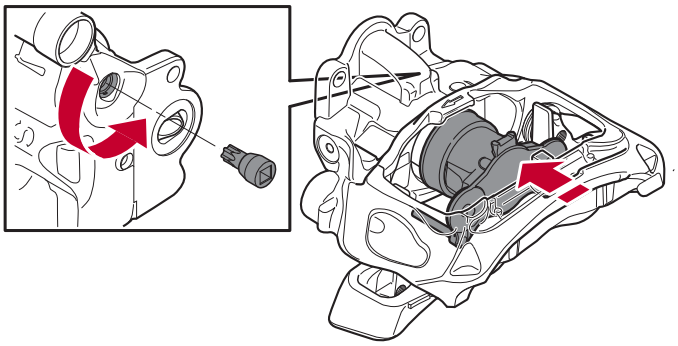

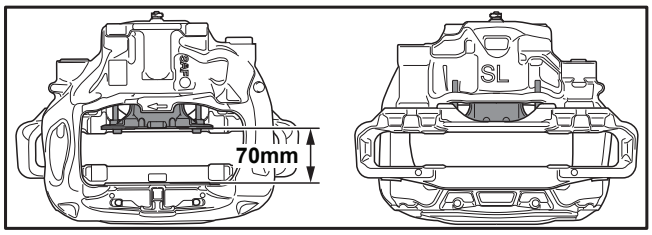

Loading the thrust plate.

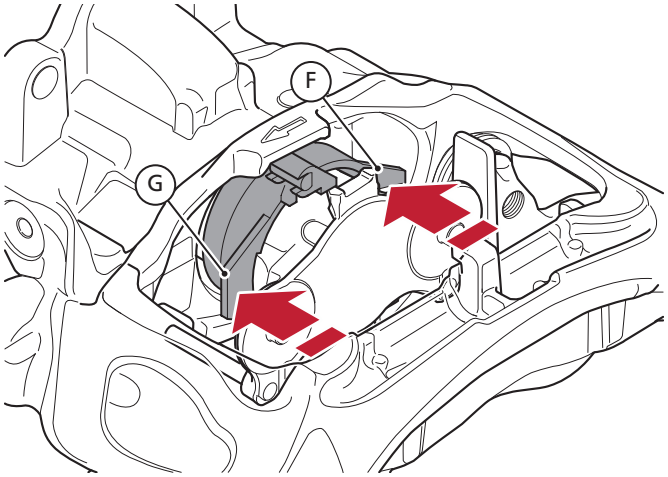

Press in the thrust plate bellows.

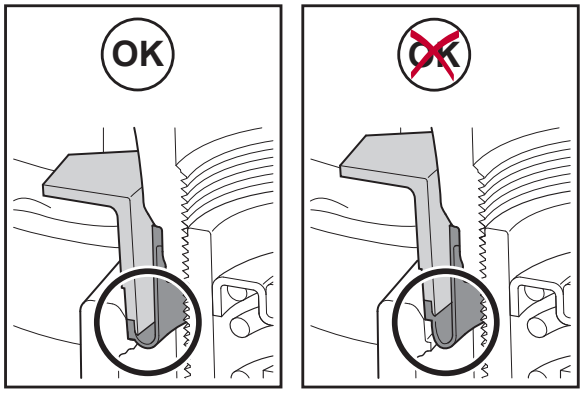

Adjustment screw bellows seated.

8. Assemble Haldex caliper bellows press tool, load the assembled special tools into the caliper end of the thrust plate bellows.
9. By hand, firmly press on the tool with equal and parallel force so that the thrust plate bellows is pressed into position within the caliper.
10. The special tool can be removed, rotated, and then reapplied to aid the equal and parallel bellows seating.
11. Remove the tool and ensure the bellows is correctly seated around the thrust plate shaft and the caliper housing aperture.
12. Retract the thrust plate fully to its inner position by manually turning the reset shaft counter-clockwise. A clicking sound shall be heard and felt when retracting. The stop at fully retracted inner thrust plate must be distinct, but do not exceed 15 ft-lbs. (20 Nm) in torque or leave it tightened in this position.

Replacement of Slide Function Assembly

IMPORTANT!
Where specified, only use the Haldex ModulT Tool Kit.

WARNING Personal safety equipment most be worn when working with equipment.

Remove Slide Function Assembly

1. Use a small hammer and chisel to remove the leading and trailing protective cups (A). The protective cups are to be discarded, not re-used.
2. Using Haldex tool P/N95233 (3/4" long drive 14 mm hexagon), remove the two slide pin bolts (B). The bolts are to be discarded, not re-used.

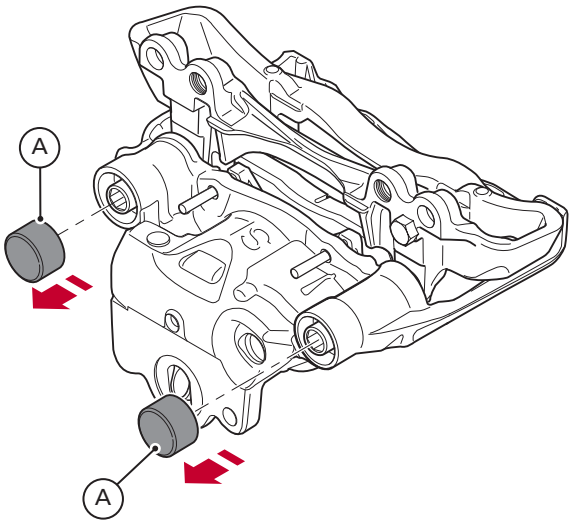

Remove slide protection cups and slide pin bolts.

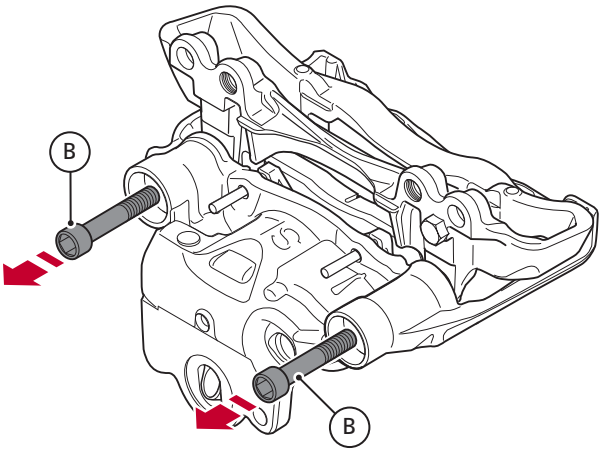

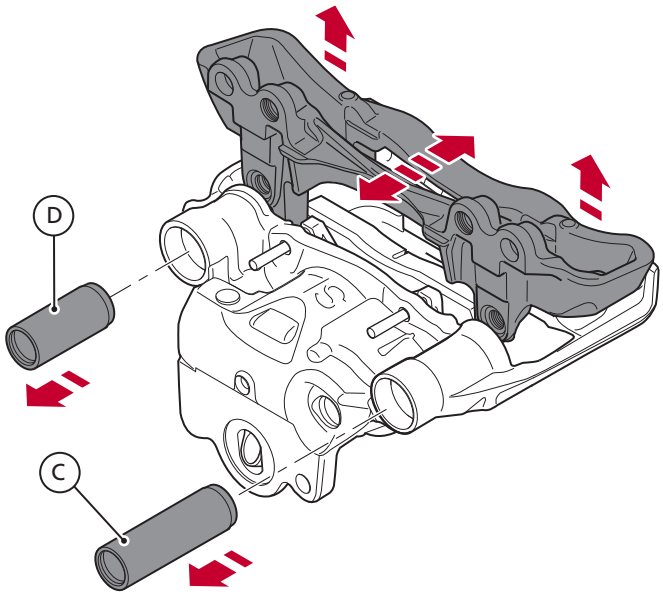

Remove the carrier and slide pins.

3. Remove the carrier from the caliper by gently rocking the carrier to release it from the slide pins and bellows. Once released, press slide pins back enough to be able to lift out the carrier.

IMPORTANT!
Be careful not to damage the slide pin bellows sealing surfaces in the caliper.

4. By hand push out and remove the leading slide pin (C) and the trailing slide pin (D).
5. By hand, carefully remove the two slide pin bellows (E). If required, use a small screwdriver to pry them out. Be careful not to damage the slide pin bellows sealing surfaces if using a tool to pry out the bellows.
6. Carefully follow steps 8 and 9 to remove the two leading bearings (F) and the spacer (G) and trailing composite bushing (H).

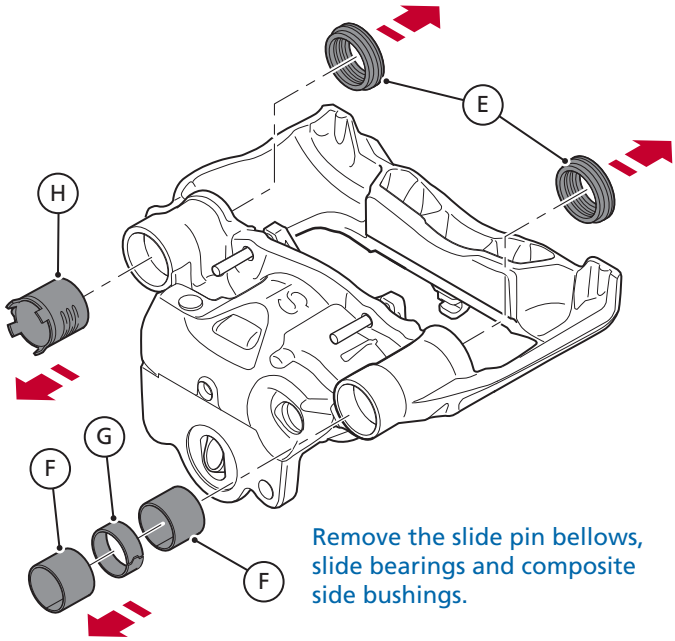

Remove the slide pin bellows, slide bearings and composite side bushings.

7. To remove the two bearings (F) and the spacer (G) on the leading side, assemble in sequence Haldex tool (K), (L), (D), (A) and (B), as shown.
8. Once fitted correctly, turn the threaded tool clockwise which will pull out the two bearings (F) and the spacer (G).
9. The composite bushing (H) on the trailing side should be removable by hand.
10. If the composite bushing is not removable by hand, assemble in sequence Haldex special tool (K), (L), (D), (A) and (B).
11. Once fitted correctly, turn the threaded tool clockwise which will pull out the composite bushing.
12. Clean the bearing and bellows sealing surfaces of the caliper to ensure they are free from dirt, moisture, corrosion, and damage.
13. If the sealing surfaces have lost their protective surface coating, apply/smear a small amount of general-purpose grease over the whole area so when parts are refitted the grease will provide corrosion protection.

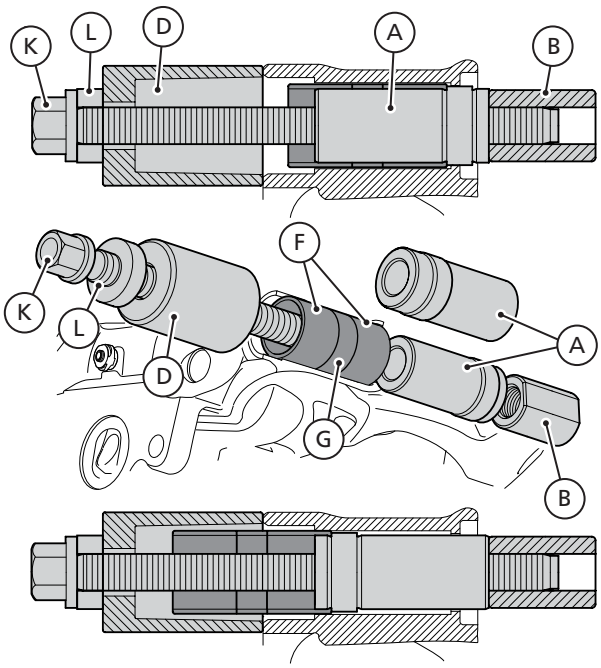

Remove the leading slide bearing.

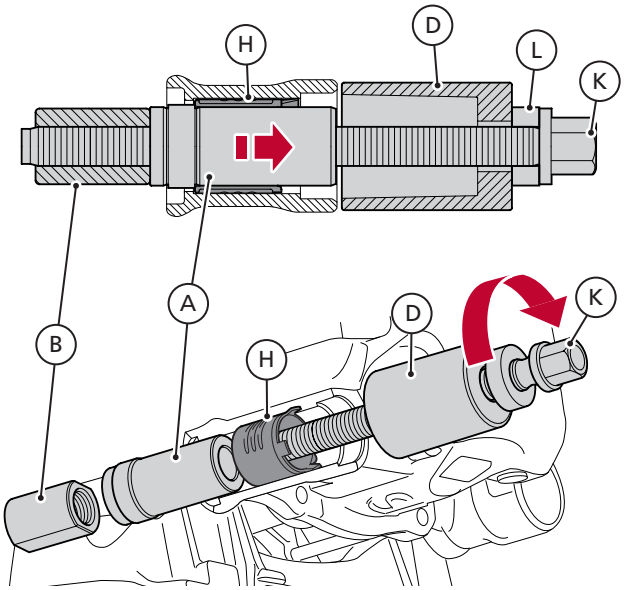

Remove the trailing side composite bearing.

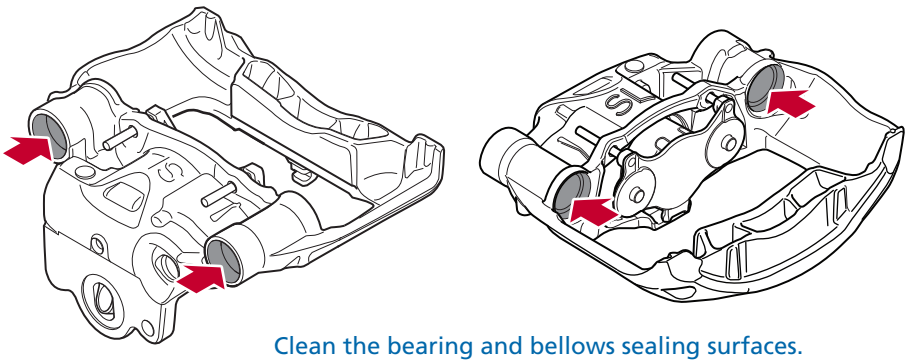

Clean the bearing and bellows sealing surfaces.

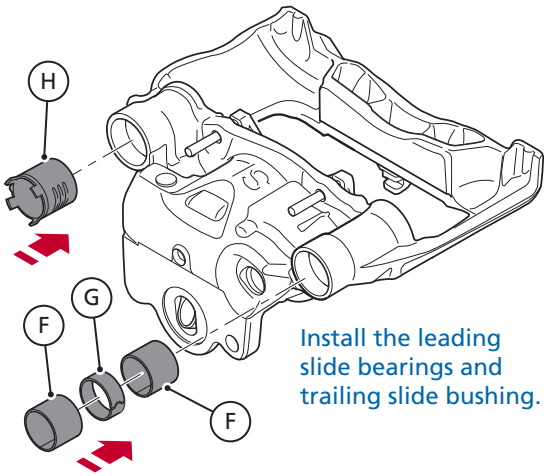

Install the leading slide bearings and trailing slide bushing.

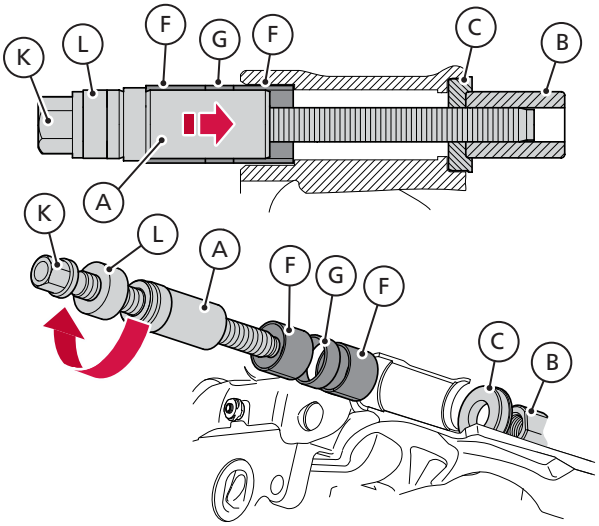

Tool assembly for leading slide bearings.

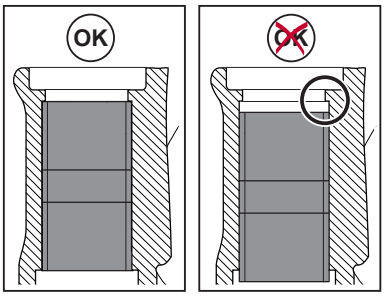

Leading slide bearings installed.

WARNING Personal safety equipment most be worn when working with equipment.

Install Slide Function Assembly

IMPORTANT!
Verify that the rotating bearing surface on (L) is facing toward the flange on (K).

1. Carefully follow steps 2-4 below to install the two leading bearings (F) and the spacer (G) and step 5 to install the trailing composite bushing (H).
2. To install the two new bearings (F) and new spacer (G) on the leading side, assemble in sequence tool P/N's 96819 (K), 95423 (L), 95219 (A), 95221 (C) and 96820 (B), preloaded with the new parts, as shown.
3. Once fitted correctly, turn the threaded tool clockwise which will pull into position the two bearings (F) and spacer (G) complete.
4. Stop once the bearings are seated in the correct position up to the inside lip of the bearing location surface, see figure 60. It is important the bearings are seated correctly but not over tightened as this may cause damage.

IMPORTANT!
The trailing side composite bushing, installed by hand, must be indexed correctly or the slide function of the brake will not be correct.

5. To install the new composite bushing (H) on the trailing side, by hand, push the composite bushing into place, until it bottoms out. Ensure the index lug locates correctly in the caliper slot.
6. No tools or high force are required for this fitting process, excessive force may cause damage.

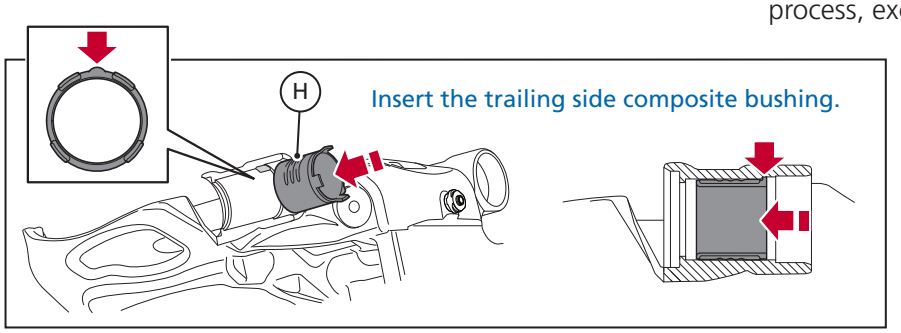

Insert the trailing side composite bushing.

If the bushing is not indexed correctly, the slide pin and protective cup may not fit.

7. By hand, firmly push the two new slide pin bellows into their caliper locations ensuring that the bellows are seated correctly in position. It is important to confirm the bellows are correctly seated within the caliper, bottoming out against the caliper location shoulder. Failure to seat the bellows may compromise the sliding function of the brake.

8. By hand, insert the leading slide pin into the bearings and the trailing slide pin into the composite bushing. The longer slide pin is fitted into the leading side. One end of the slide pin has a machined groove and is inserted fist (no grease is required).

9. Verify the bellows location ring is fitted correct and in one piece. By hand, locate the bellows onto the end of the slide pins. Ensure the bellows and the bellows location ring seat correctly on the slide pins. Failure to do so may compromise the sliding function of the brake.

10. Clean the brake pad contact surfaces on the carrier, caliper, and thrust plate. A wire brush can be used, however, ensure not to damage any of the bellows. Check for wear on the carrier pad abutment area, if present, replace carrier.

11. Lift the carrier into position to attach the caliper while ensuring that the slide pins fitted with bellows do not interfere or obstruct. If necessary, push out the slide pins slightly by hand while lowering the carrier. Hold the carrier in position while the two bolts are threaded.

12. Using a 14mm x 3/4" long allen socket (Haldex P/N 95233), continue to tighten and torque the slide pin bolts to 130 ft-lbs. + 70° (180 Nm + 70°).

13. Install the protective cups as illustrated (AT and AL) using a soft-headed mallet.

    a. Note: the cups are different sizes, the larger cup is fitted to the trailing side pin (AT) and the smaller cup is fitted to the leading side (AL). The leading protective cup (AL) seats raised from the caliper casting surface and the trailing protective cup (AT) seats nearly flush. Installing the cups at an angle or damaging the ends may compromise the sliding function of the caliper.

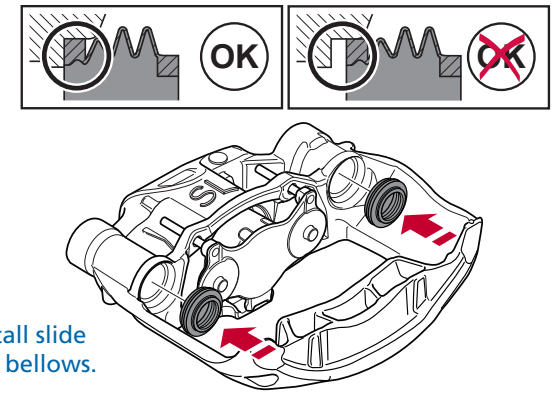

Install slide pin bellows.

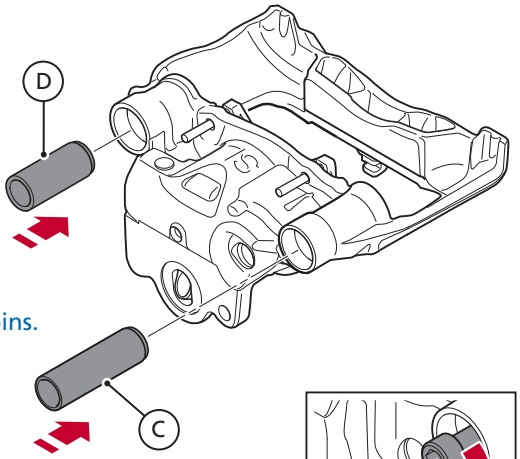

Insert slide pins.

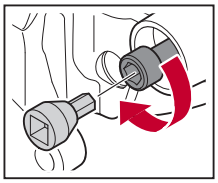

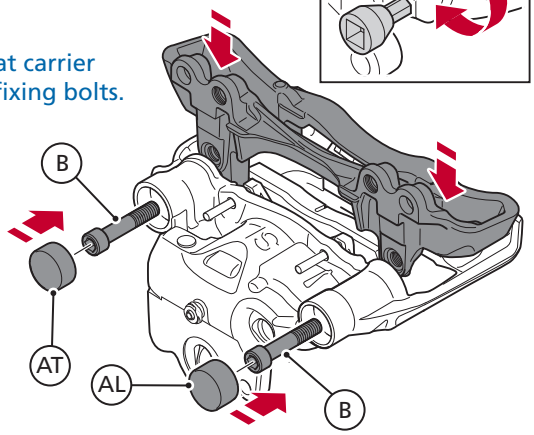

Reseat carrier and fixing bolts.

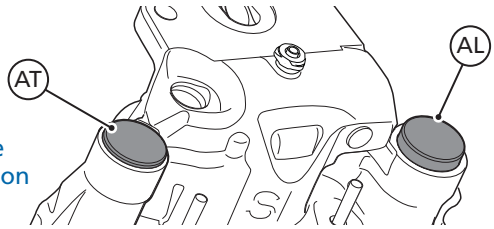

Seat the protection cups.

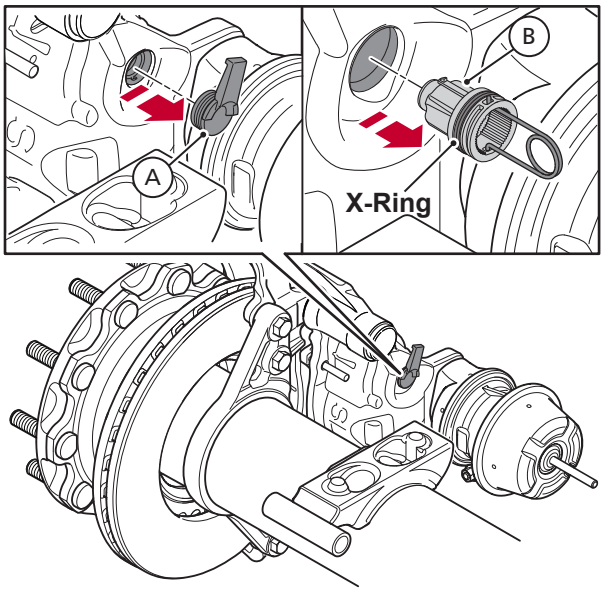

Remove the reset shaft.

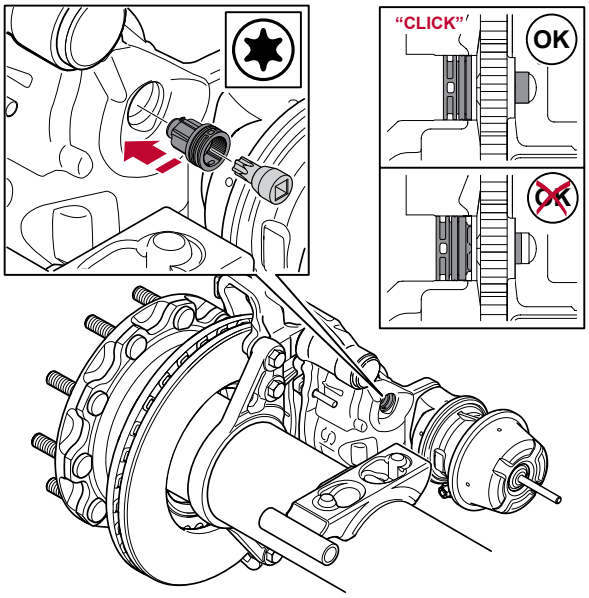

Replace the reset shaft.

Reset Shaft Removal and Replacement

1. Remove the reset shaft protection plug.
2. Insert Haldex tool P/N 95210 and pull out the reset shaft by locating the tool in the two holes of the reset shaft.
3. Clean the reset shaft bore and surrounding surface. Ensure the area is free from dirt, dust, debris, moisture, and contaminants.
4. Using a T55 Torx, insert the reset shaft into the caliper by hand.
   a. Note: A new reset shaft is assembled complete with O-ring and lubricated, no additional grease or lubrication is required. If reusing a reset shaft, apply a thin layer of grease to ensure the O-ring is not damaged upon installation.
5. Push the reset shaft into position by hand, no impact or force is required. Use of force may damage the shaft. The reset shaft will click into position in the center of the gear wheel when fully engaged.

Caliper Removal and Replacement

WARNING Personal safety equipment most be worn when working with equipment.

Removal

1. Before removing caliper from axle, ensure that brake chamber (page 28) is removed and secured; as well as the brake pads.
2. Loosen bolts with long wrench, one at a time, ensuring top bolt is still supporting caliper.
3. Confirm the caliper is supported.
4. Remove the bolts completely.

Replacement

1. Re-install the caliper. (Never reuse bolts)

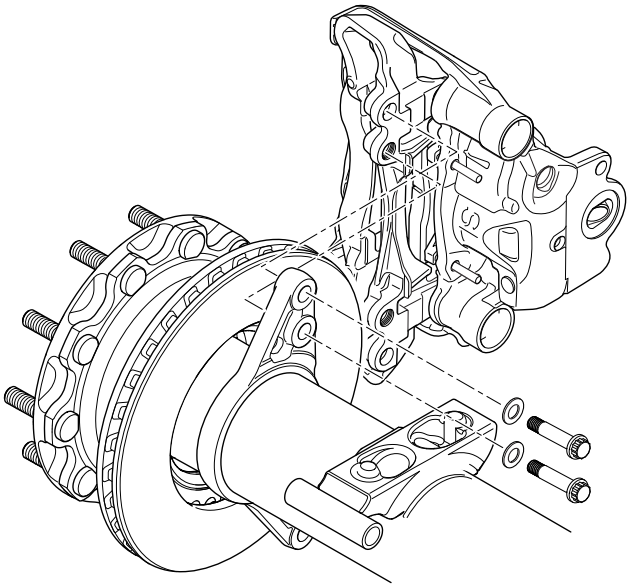

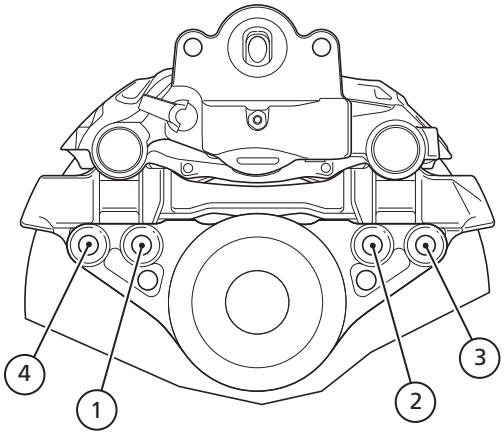

Screw tightening sequence

Caliper Installation

1. Starting with top bolt, re-install the caliper onto the brake spider using four (4) new SAF specific brake caliper bolts:
   a. Pre-torque the bolts to 88 ft-lbs (120 Nm) from inner bolts to outer bolts using a size 24 mm socket.
   b. Verify the pre-torque of the bolts a second time, and if necessary, re-tighten all bolts to 88 ft-lbs (120 Nm).
   c. Final torque from inner bolts to outer bolts to 331 ± 22 ft-lbs (450 ± 30 Nm).

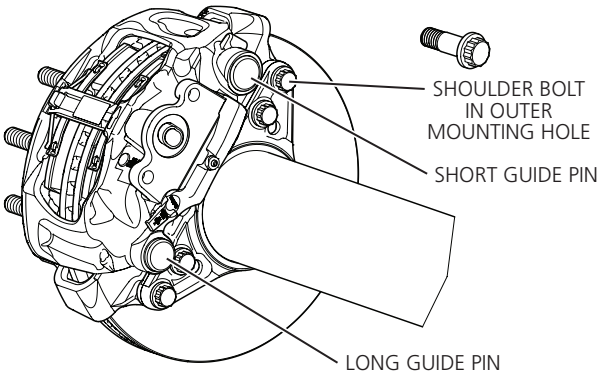

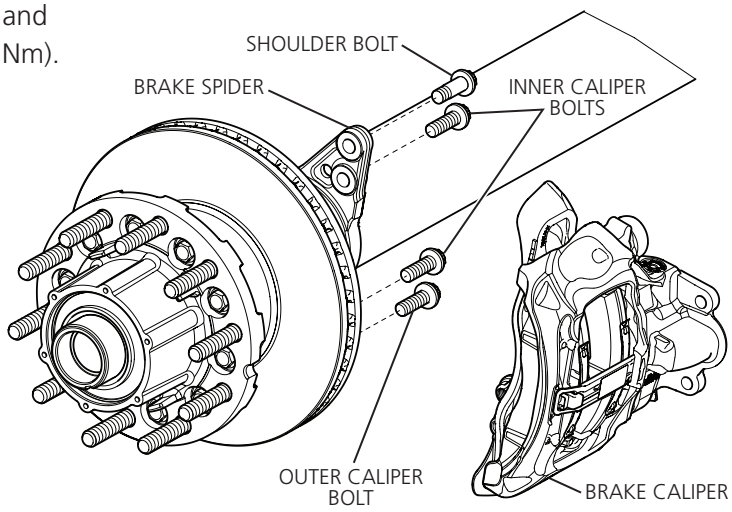

Troubleshooting

If you are experiencing no or low brake force, uneven braking, accelerated pad wear or unusual noise/vibration please review the following list.

WARNING Personal safety equipment most be worn when working with equipment.

No or low brake force	
Pads are worn out	Replace pads
The difference between inner/outer pad wear is greater than 0.2 in (3 mm)?	This is not necessarily a fault and will not normally have any negative effect on the ADB function. But if the difference is >0.2 in (>3 mm) you need to be aware of the reason why in order to ensure that the system continues to operate correctly. The following potential causes should be considered and investigated:
	ADB installation Sliding functions: check that nothing is blocking the calipers full range of motion (including but not limited to strapped hoses and suspension components). On steering axle, ensure that nothing is interfering with caliper, over the full steering range motion.
	Mechanical wear Pads used in wet, dirty and/or salty environments will wear faster than pads running in dry, clean conditions. Differential pad wear can occur between pads on a single wheel end. Dust shields will help eliminate excessive pad wear.
	Driving input Aggressive braking can result in uneven pad wear as it results in higher than average braking temperatures. Frequent stopping and high-speed stops will also result in high running temperatures, again causing uneven pad wear.
	Too small or too large of a running clearance may indicate that the adjuster may not be functioning and should be checked. Perform an adjuster mechanism function test.
	The lack of proper clearance may indicate that the slide function is seized. Perform a slide function movement measurement test.
Running clearance	Review pad/disc clearance, to determine if in acceptable limits.
	The lack of proper clearance may indicate that the slide function is seizing. Perform a slide function test.
	The adjust mechanism is not functioning correctly. Perform an adjuster mechanism function test. If a failed test replace caliper.

No or low brake force (continued)	
Is pad/disc clearance OK?	Conduct initial setting + function checks.
Rotor	Review rotor health section found on page 23, 24
Brake Chamber	Review air pressure in the brake chamber okay? Measure with pressure gauge.
	Evaluate for leaks.
	Ensure that the drain plug has been removed from the brake chamber housing.
Is air pressure in the brake chamber OK? (Measure with a pressure gauge at the brake chamber)	Implement remedial measures according to vehicle manufacturer's instructions.
Has the drain plug been removed from the brake chamber housing?	Remove the drain plug located at the lowest point of the brake chamber.
Does the mechanism and caliper move freely?	Conduct initial settings and function check.
Has one of the drain plugs been removed from the brake chamber housing?	Remove the drain plug located at the lowest point.

Noise / vibrations from the brake	
Can the pads move freely in the carrier?	Remove the brake pads, clean the pads, carrier and caliper, then refit.
Are there non-permitted cracks/grooves on the brake rotor?	Probably need to change the brake rotor. See the vehicle manufacturer's instructions for more information.
Is the brake rotor's run-out within specified parameters?	If not then probably need to change the brake rotor. See the vehicle manufacturer's instructions for more information.
Are the disc brake and its components fixed to the axle as specified?	See the vehicle manufacturer's instructions for more information.

Notes:

Notes:

With more than 100 years of intensely focused innovation, Haldex holds unrivaled expertise in brake systems and air suspension systems for heavy trucks, trailers and buses. We live and breathe our business, delivering robust, technically superior solutions born from deep insight into our customers' reality. By concentrating on our core competencies and following our strengths and passions, we combine both the operating speed and flexibility required by the market. Collaborative innovation is not only the essence of our products - it is also our philosophy. Our employees, spread on four continents, are constantly challenging the conventional and strive to ensure that the products we deliver create unique value for our customers and all end-users.

To learn more, contact your Haldex sales professional.

United States 816-891-2470
Canada 519-621-6722
Mexico 52-81-81569500

For additional contact information or to learn more about Haldex, please visit **Haldex.com**

L30050
US 2/25 Web only