ModulT® DBT22LD Truck Air Disc Brake Package

Proven, Lightweight Single Piston Technology with Breakthrough Braking Performance, Simplified Maintenance, and Durable Long-Life Design

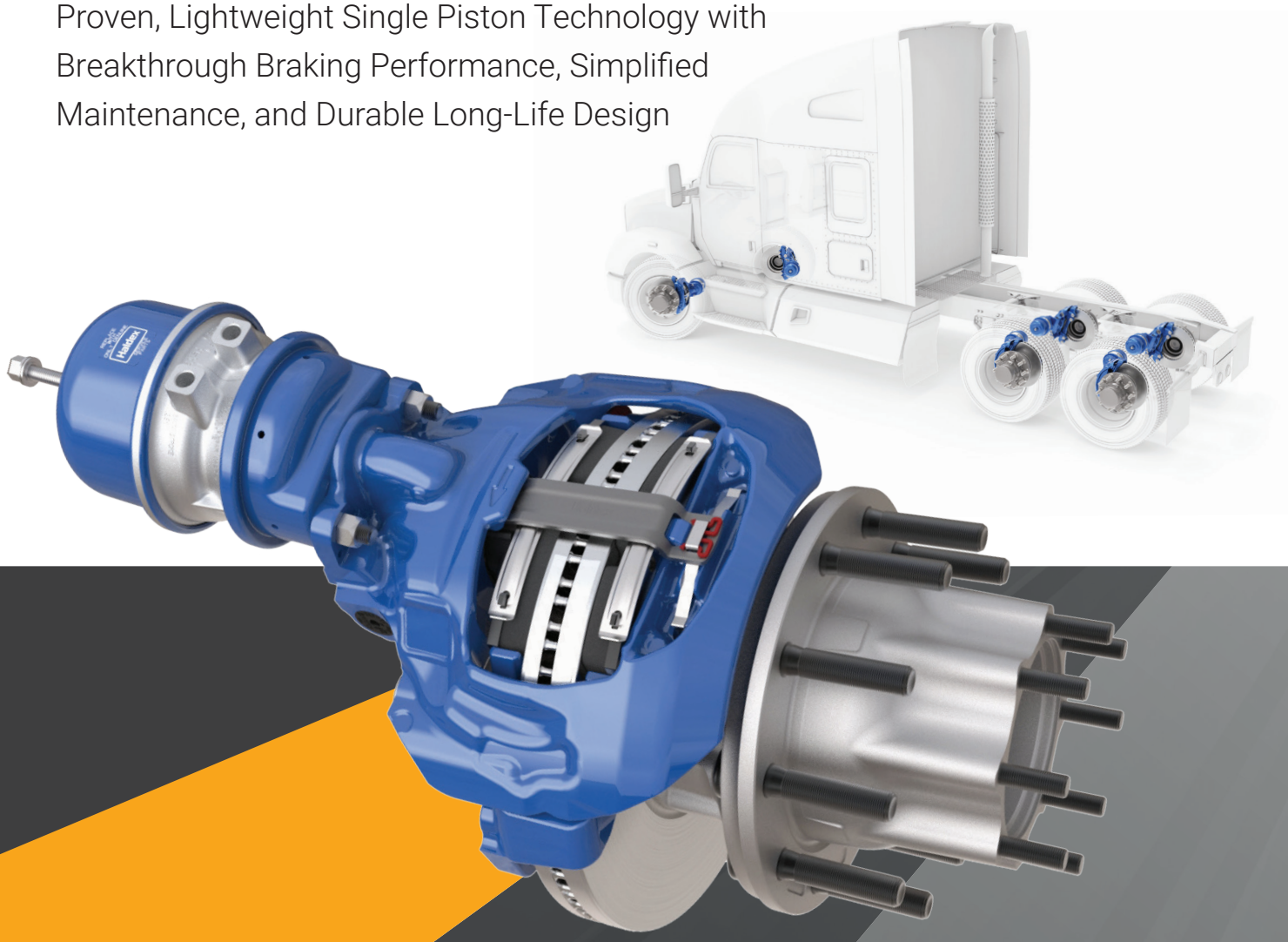

Haldex ModulT®
DBT22LD ADB

Optimized weight savings single piston design.

The DBT22LD is brilliantly designed with features that simplify maintenance, lower operating cost and keep you on the road.

- Robust performance in an optimized, lightweight truck brake
- Brake force supports up to 23,000 lb. gross axle weight rating
- Torque plate compatible for a broad range of high-volume drive axle and suspension configurations (23,000 lb. max load rating)
- Fits common integrated steer axle torque plates (14,600 lb. max load rating)
- Equipped with Haldex LifeSeal+ Spring Brake Actuator
- Compatible with industry standard ConMet Pre-Set Plus™ hub and rotor assembly

Proven Technology
3,000,000
ModulT® Air Disc Brake Units in Operation World Wide

Lightweight Air Disc Brake Package for North American Trucks

Featuring Haldex ModulT® DBT22LD Calipers with Haldex LifeSeal+ Actuators

DBT22LD ADB Caliper
Proven Haldex single piston technology with industry leading features that provide reliable, long-life operation and robust braking performance, all in a lightweight design.



Haldex LifeSeal+ Spring Brake Actuator
The industry's first and only truly sealed, double diaphragm spring brake with an 8-Year standard-duty line haul/OTR warranty. Steer configurations are standard with quality Haldex service brake chambers.



DBT22LD ADB technology is applicable to both truck drive and steer axle wheel ends.

N-Type Brake Pads

Meets 2025 copper reduced compliance regulations while providing consistent stopping power and longer pad life.

Industry Leading ADB Wheel End Compatibility
Engineered to be compatible with ConMet® drive and steer hub and rotor assemblies featuring Pre-Set Plus™ wheel end technology, including ultra-lightweight aluminum hub options.

Pre-Set Plus is a registered trademark of Consolidated Metco.

ModulT® DBT22LD
ADB Caliper

Performance you can trust.

The DBT22LD single piston ADB Caliper is designed with industry leading technologies that surpass the competitive industry design offerings.



1 Boltless Brake Pad Retainer Bar
Simplifies maintenance and requires no extra tools for quick and easy brake pad replacement. Visible retainer bar clip allows quick and easy confirmation that brake pads are securely locked in place, unlike bolted designs.

2 Clearance Sensing, One-Way Clutch Mechanism Brake Adjuster Technology
Proven Haldex ABA technology provides reliable, precision adjustment ensuring maximum braking output performance throughout the life of the brake pads.

3 Single Piston with Elongated Inverted Bellows Seal Design
Protects adjustment mechanism from heat and road debris even when thrust plate is fully extended providing enhanced functionality life.

4 Patented Spindle Adjustment Shaft Seal
Optimal seal design with 10mm O-ring shaft seal. The small seal eliminates the potential for water intrusion into the adjustment mechanism which can lead to corrosion experienced with competitive designs.

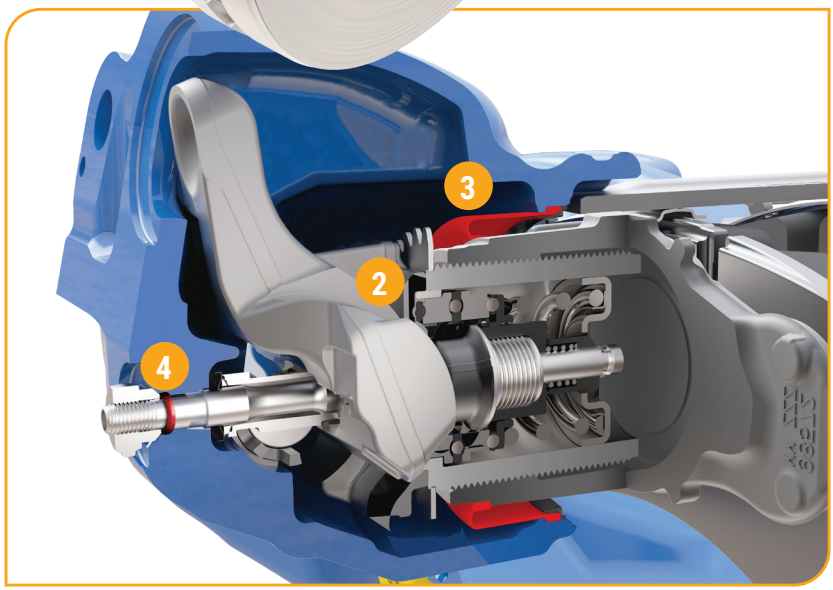

DBT22LD Clearance Sensing, One-Way Clutch Adjustment Mechanism
Features the same proven and trusted technology found in Haldex automatic brake adjusters.

Superior Single Piston Brake Performance

The industry's only one-piece, cast steel integrated thrust plate/piston design with lube-free stainless steel slide pins.

The lube-free, stainless steel leading and trailing slide pins featured in the DBT22LD design are unmatched for reliability by preventing corrosion which leads to pin seizing.

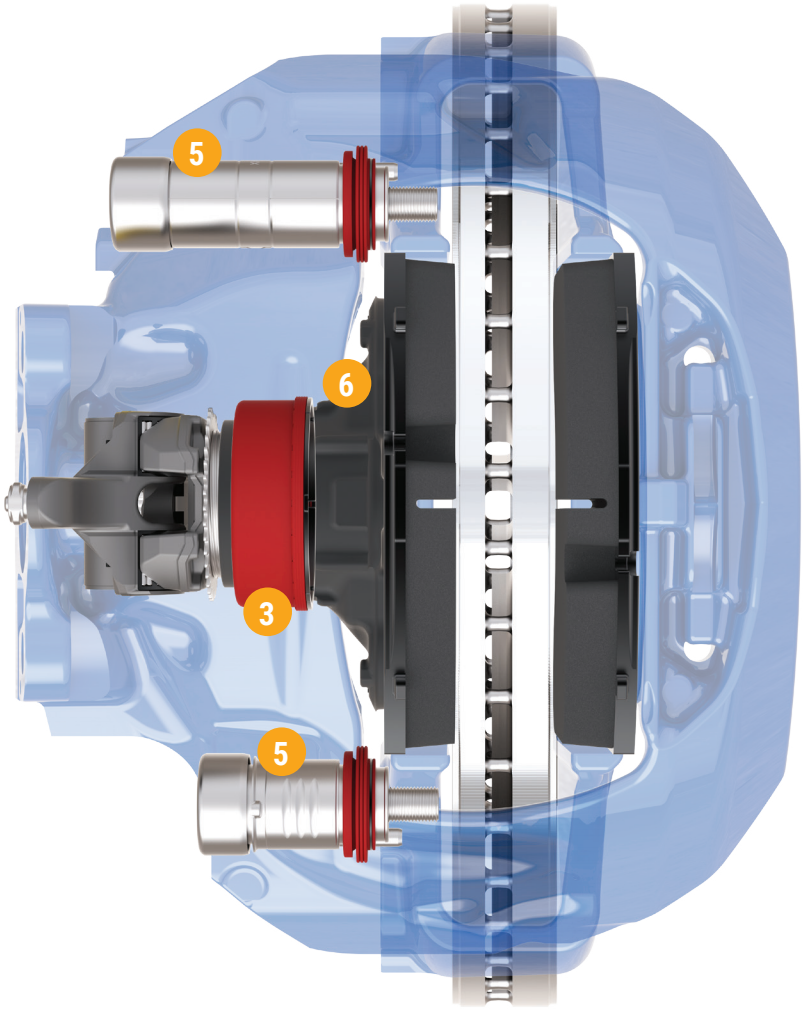

5 Lube-Free, Stainless Steel Leading and Trailing Slide Pins
Include Teflon® coated steel bushings with dual lip seals and cap seals to eliminate the potential for corrosion, unlike competitive slide pins which can experience seizing and reduced service life.

Teflon is a registered trademark of The Chemours Company FC, LLC.

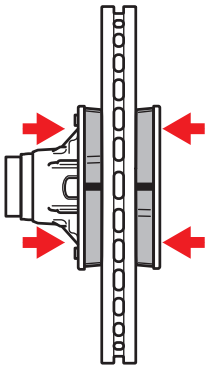

ModuIT® Robust One-Piece Integrated Thrust Plate/ Piston Design
Assures even pad wear, and when combined with the proven brake adjuster mechanism supplies consistent, maximum brake output force throughout the life of the brake pads.

6 ModuIT® Profile Comparison – 145% Larger Than Nearest Competitor

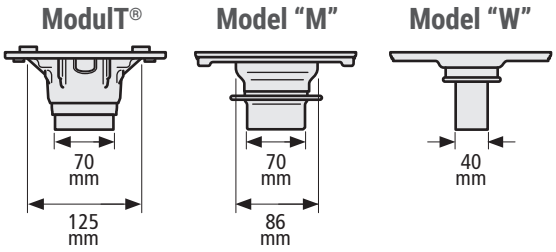

Competitive comparison shows the size superiority of the ModuIT® thrust plate/piston design versus other single piston designs.

Piston Thrust Plate and Pad Backing Plate Interface Design

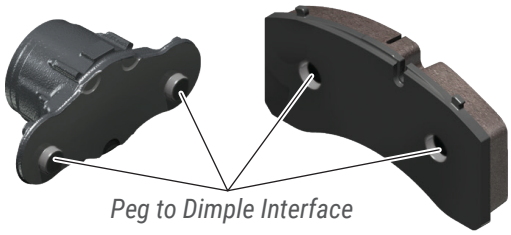

Pegs on the thrust plate face interface with dimples on the brake pad backing plate creating a stable connection for proper pad alignment and brake force vibration resistance. Common inner and outer brake pad design simplifies brake pad replacement.

Designed for Ease of Service

Fewer components for simplified maintenance.

The simplified design of the DBT22LD single piston caliper features fewer parts than twin piston calipers, making maintenance easier. Common inner and outer brake pad design simplifies brake pad replacement. The proven design delivers reliability for more uptime with significant weight savings.

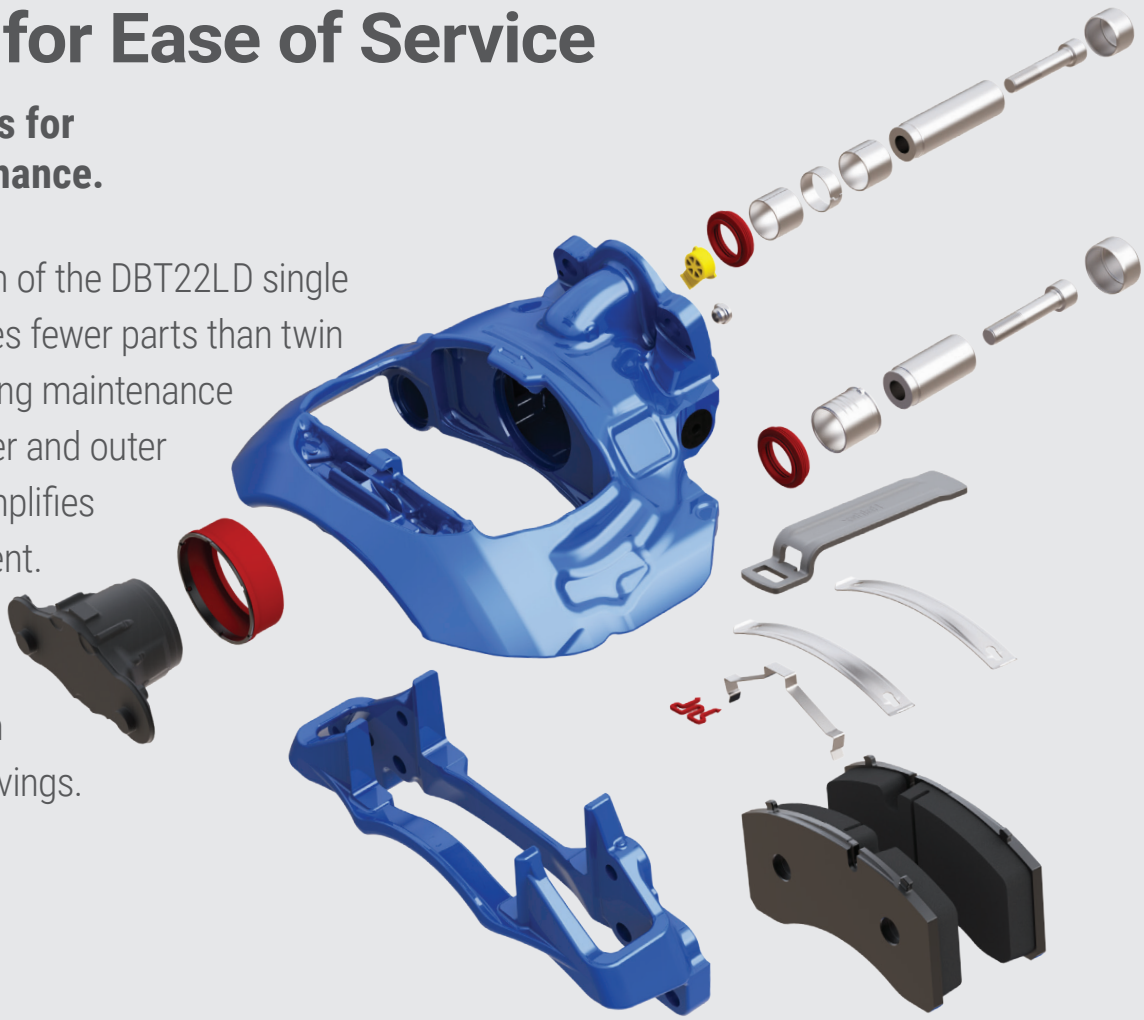

Single Piston Air Disc Brake Performance You Can Depend On

Best Product Reliability with Low Cost of Ownership

- Efficient design: single piston with only two bolts in the entire caliper assembly
- Superior slide function: stainless steel pins/lubrication free
- Proven, reliable single piston brake - stable force distribution for even pad wear
- Ease of service
- Over a decade of history with over 3 million ModulT® single piston brakes in the field world wide
- 5-Year/500,000 miles, whichever occurs first

Please see warranty policy for full details.

Dual Pad Wear Indicator Gauge Pins

Wheels don't need to be removed to visually check wear.

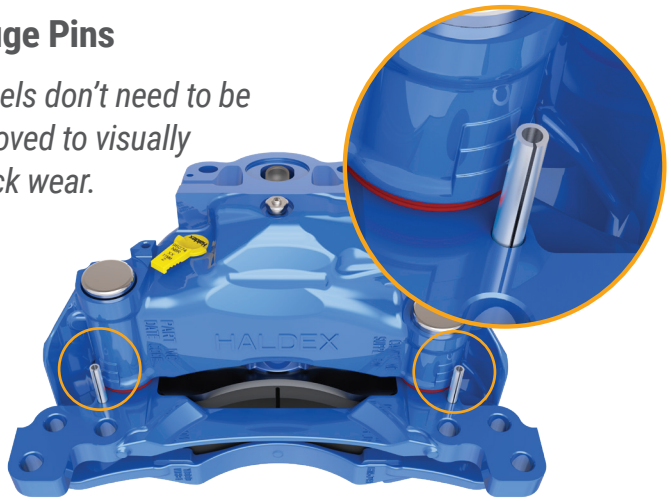

The DBT22LD features two easy to access pad wear indicator pins. One located near the leading slide pin and a second pin near the trailing slide pin. Competitive designs include only one indicator pin or require a complicated measuring process to determine pad wear.

LifeSeal+
Spring Brakes

Long-life performance sealed in.

ModulT® ADBs are standard equipped with the industry's first and only sealed double diaphragm ADB spring brake. You need performance and durability in your brakes. Not rust.

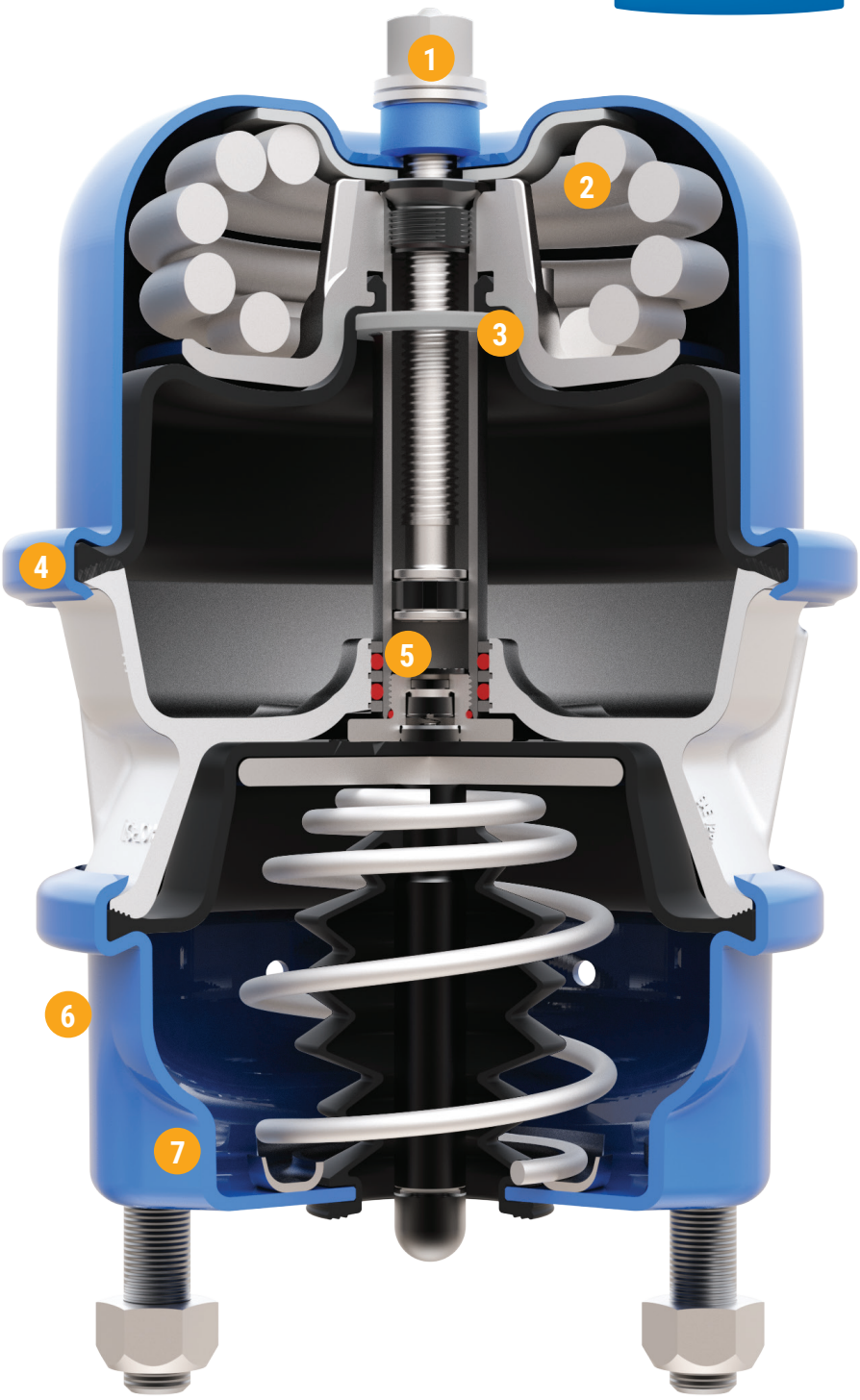

1. **Integral Caging Tool Welded Projection Nut**
   For durability and strength
2. **Premium Spring Design**
   Reduces Load Loss Over Time
3. **Retaining Mechanism**
   Locking feature with grip rings ensures diaphragm placement
4. **Formed Housing**
   Improves corrosion protection
5. **Center Seal**
   Double O-ring center seal for improved durability and sealing capability
6. **E-Coating Spring Housing Chamber**
   Electrostatic polymer coating improves corrosion resistance
7. **Optional 8-Gauge Heavy-Duty Steel Stud Housing**
   Ensures extended life, even in the most brutal environments

Tested and Proven

- Testing exceeds SAE J1469 / J2318 and SAE J2902 / J2932 standards
- Park side tested at 135 psi
- Endurance tested to a million park side cycles – 5 times the SAE specification
- 8-Year warranty for standard-duty line haul OTR

Engineering Your Road to Success

The SAF-HOLLAND® Group is one of the leading international manufacturers of suspension-related assemblies and components for trailers, trucks and buses. Our innovative products increase the efficiency, safety and environmental friendliness of commercial vehicles, contribute to the success of our customers. With around 5,500 employees worldwide, we are at the forefront of shaping the future of the transportation industry.

SAF

Trailer Axles and Suspension Systems

Holland

Coupling and Lifting Technologies

Haldex

Brake Solutions and Air Valve Technologies

KLL

Suspensions and Components for Commercial Vehicles

NEWAY

Suspensions for Trucks and Buses

TRAILERMASTER.COM

Trailer Telematics

V.ORLANDI

Coupling and Lifting Technologies

YORK

Trailer Axles and Suspensions Systems

XL-SA200645L-en-US Rev A · 0824 · Amendments and errors reserved ©SAF-HOLLAND, Inc. SAF-HOLLAND, SAF, HOLLAND, HALDEX, KLL, NEWAY, Trailer Master, V. ORLANDI, YORK, and ModuIT, are trademarks of SAF-HOLLAND S.A., SAF-HOLLAND GmbH, and SAF-HOLLAND, Inc.

safholland.com **haldex.com**

SAF-HOLLAND, Inc.
Tel 800.876.3929

SAF-HOLLAND Canada Limited
Tel 519.537.3494
Western Canada 604.574.7491

SAF-HOLLAND Mexico
Tel 52.55.5456.8641

Haldex Brake Products
Tel 816.891.2470