Valve Interchange Guide

Trailer Systems

EMERGENCY/SUPPLY — SERVICE/CONTROL — SERVICE/DELIVERY — PARKING/EMERGENCY DELIVERY

PRE-121 RELAY/EMERGENCY VALVE SYSTEM

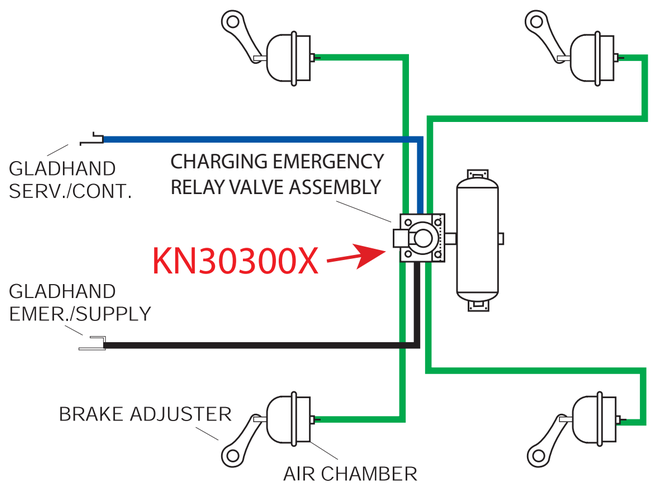

TWO TANK - ONE VALVE TANDEM AXLE SYSTEM

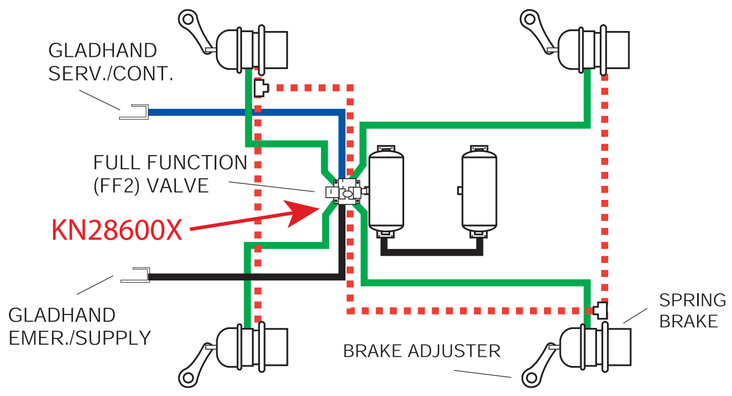

PLC SELECT ABS 2S/1M

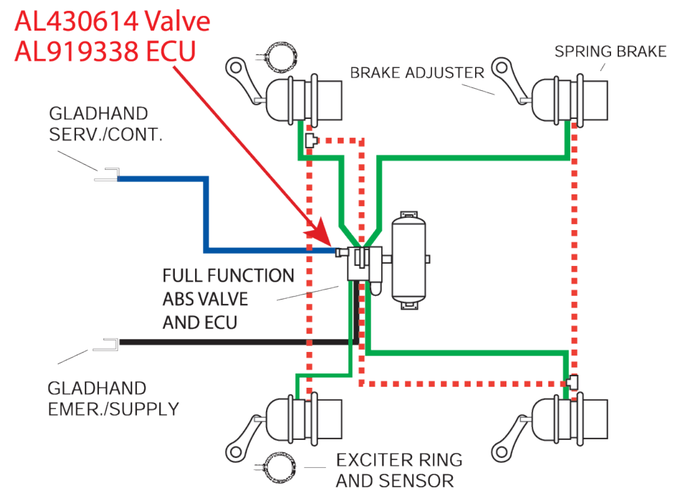

SINGLE AXLE DOLLY SYSTEM WITH CHARGING TYPE RELAY/EMERGENCY VALVE

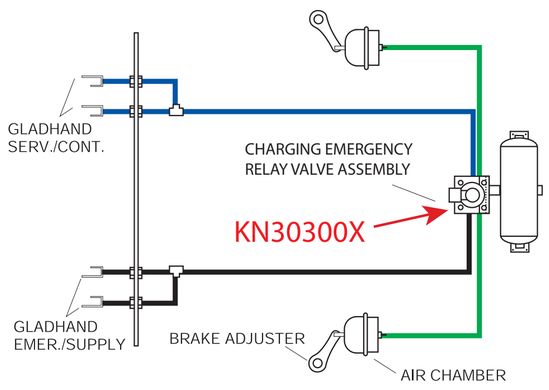

TYPICAL 121 DOLLY SYSTEM WITH NONCHARGING TYPE RELAY/EMERGENCY VALVE

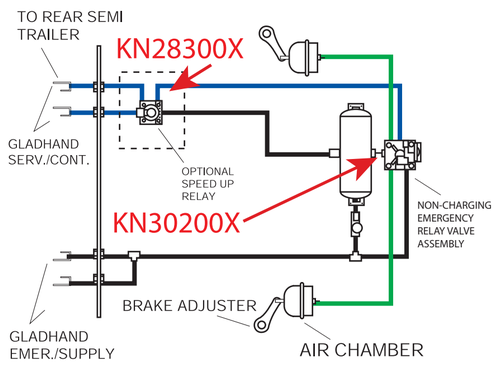

PLC SELECT ABS 4S/2M

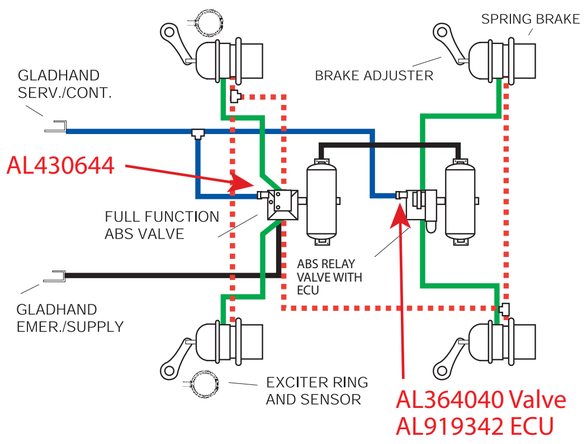

RT4/RG2 (RG5) VALVES OR SEALCO MULTI-FUNCTION WITH SERVICE RELAY VALVE

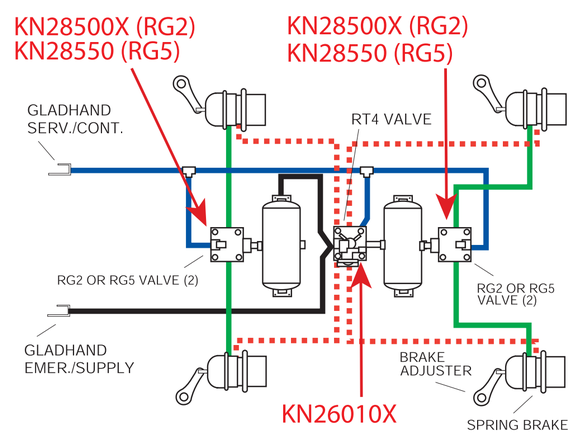

Full Function Valve

Haldex

Res: 3/4" Sup: 3/8" Cont: 1/4"

KN28600
KN28600X
KN28601
KN28601X
KN28602
KN28603

When using a FFV (KN28600X) you must remove both the relay and spring brake valve.

Relay Valve (Four Port)

Haldex

A103600X
Sup: 3/4" Del: 3/8" Cont: 1/4"

KN26000X KN26020X
KN26010X

Bendix® R-6

279180X 280651X
279952X 283940X
280375X

Sealco

110415X 110380X
110360X 110410X

Bendix® R-12

102165X 103912X
102626X 65303X

Sealco

110139X
110450X

Bendix® R-14

103028X
103833X

Relay Valve (Two Port)

Haldex

KN28500X
Sup: 3/8" Del: 3/8" Cont: 1/4"

KN28510X KN28531X
KN28520X

Sealco

110197X 110199X
110198X

Bendix® R-12

103009X 65309X
65125X 104165X

Haldex

KN28060X KN28061X
KN28132X

Sealco

110410X

Sealco

9125X

Dolly Valve

Haldex

KN28300X
Sup: 1/2" Del: 1/2" Cont: 3/8"

Bendix® R-12

109264X
65476X

Bendix® R-8

287114X

Sealco

110570X

Sealco

110410X

Trailer Spring Brake Control Valve

Haldex

KN26010X
Trl Sup: 3/8" Trl Cont: 3/8"
Res A: 1/2" Res B: 3/8" Del :3/8"

KN26020X
Trl Sup: Plugged Trl Cont: 3/8"
Res A: 1/2" Res B: 3/8" Del :3/8"

Sealco

110147X 110171X
110170X 110191X

Bendix® SR-2

102761X 110410X
103061X 287376X

Bendix® SR-4

101112X
101622X

Haldex

KN26120

Sealco

110500X
110700X

Relay Emergency Valve

Haldex

KN30100X
Serv: 1/4" Emer: 1/4" Del: 1/4" ABS: 3/4"

KN30300X
KN30400X

Sealco

110200X 110470X
110205X 110475X
110460X A10005X

Bendix® RE-6

101197X 284280X
281865X

Non-Charging

Haldex

KN30200X

Sealco

110338X

Truck Control Valve

Haldex

KN28300X
Sup: 1/2" Del: 1/2" Cont: 3/8"

Bendix® R12-P

109001X 65476X
109002X

Sealco

3100X

For detailed information such as crack pressures, port sizes and repair kits, refer to the Haldex Website haldex.com

L60063 US Rev. 6/17 2.5M LS
Printed In The USA

Truck System

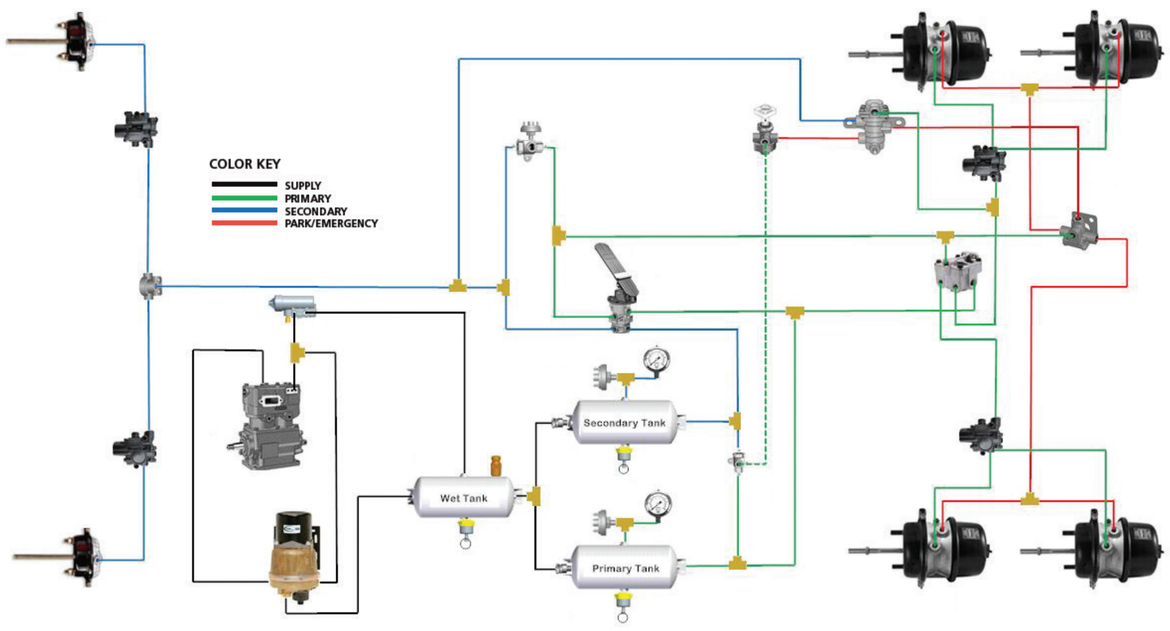

Tractor System

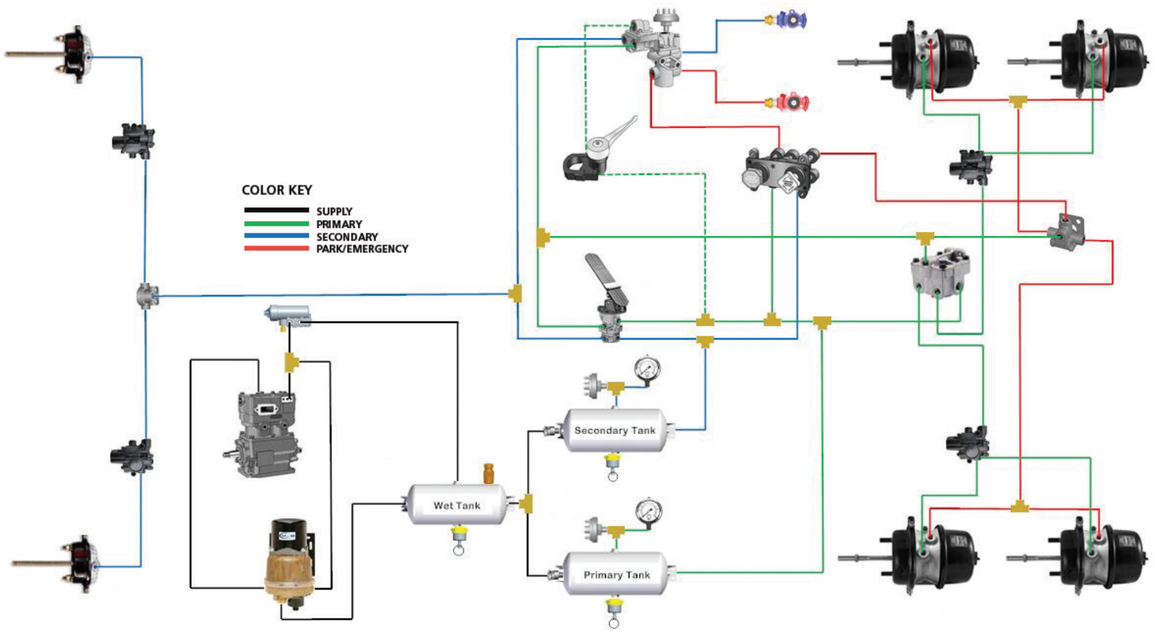

Relay Valves

Haldex

A103600X
Sup: 3/4" Del: 3/8" Cont: 1/4"

Bendix® R-12

102626X 65303X
102165X

Bendix® R-14H

103010X
103294X

Bendix® R-6/R-8

279180X
286370X

Haldex

KN28060X KN28132X
KN28061X KN28140X

Bendix® R-14

103028X
103833X

Sealco

110412X 9125X
110416X

Other Relay Valves Found on Trucks & Tractors

103009X 106284X 65125X 65146X KN28071X KN28085X
103912X 109264X 65145X KN28065X KN28080X

Manifold Dash Valve

Bendix® MV-3

65157X
Reservoirs (2): 1/4"
Del. Tractor: 1/4"
Del. Trailer: 1/4"
Exhaust: 1/4"

65159X 65187X 65192X

Bendix® PP-DC

800034X

Bendix® MV-2

101437X
101569X
101570X

Haldex

KN20619
KN20621

Dash Valves

Bendix® PP-1

276566X 287417X
276567X 287600X
281587X

Bendix® PP-2

276462X
280454X

Bendix® PP-3

279787X 289477X
288746X 289512X

Bendix® PP-8

287238X
287418X

Foot Valve

Haldex

KN22150
Sup: 3/8" Del: 3/8"

Bendix® E-6

286171X

Bendix® E-7

101818X
284760X
286773X
286774X

Bendix® E-12

65313X

Other Foot Valves Found on Trucks & Tractors

101100X 229501X 279950X
101818X 277863X 284760X

ABS

4721707970X...Automatic Traction Control Valve (ATC)
4721950050X..... In-Line Modulator Valve
4721950520X..... In-Line Modulator Valve
4721950760X..... Modulator Valve
4721950770X..... Modulator Valve
4721950780X..... Modulator Valve
4721950790X..... Modulator Valve
4721950800X..... Modulator Valve
4721950810X..... Modulator Valve
4721950820X..... Modulator Valve
4721950830X..... Modulator Valve
4725001000X..... ABS Valve Package (Rear Axle)
4725001010X..... ABS Valve Package (Rear Axle)
4725001020X..... ABS Valve Package (Rear Axle)
4725001030X..... ABS Valve Package (Rear Axle)
4725001200X..... ABS Valve Package (Rear Axle)
4725003000X.....ABS Valve Package (Front Axle)
4725003010X.....ABS Valve Package (Front Axle)
4725003020X.....ABS Valve Package (Front Axle)
4725003200X.....ABS Valve Package (Front Axle)
4725003210X.....ABS Valve Package (Front Axle)
9730110210X..... Relay Valve (Rear Axle)
9730110220X..... Relay Valve (Rear Axle)
9730110230X..... Relay Valve (Rear Axle)
9730110240X..... Relay Valve (Rear Axle)
9735001040X..... Quick Release Valve (Front Axle)
9735001050X..... ABS Valve Package (Rear Axle)
9735001060X..... ABS Valve Package (Rear Axle)

Competitor Products and Trademarks: In addition to Haldex's own products, Haldex remanufactures the products of various other companies in the industry ("competitor products") including the following brands: Carrier, Bendix, Ford, Caterpillar, Mack, Cummins, Detroit Diesel, CAT, WABCO, Meritor, Sealco, Primus, Voyager, Kenworth, Navistar, Peterbilt, Mack, GMC (General Motors), Chevy, Dodge, Ford, DDC, Isuzu, MAN, Mercedes, Navistar, Perkins, Renault, Crane, Delco, Leece- Neville, Motorola, Horton, Gold Top, Dayton, Sprague, Trico, Thermo-King, TRW, Saginaw, Hobourn/Eaton, Vickers, Fruehauf, Dana, Dana Spicer, Spicer, Dexter, Vibra Seal, SKF, NOVA Bus, New Flyer Bus, Easy-Stop, LIPE, Lucas Girling and Eaton. All trade names and trademarks associated with those competitor products referenced in this literature are the property of the respective competitors or their licensors. Haldex's use of the competitor names and marks is solely for the purpose of describing the origin of the products or intended use. None of these competitors are affiliated with Haldex, nor are we, our products or this literature sponsored by them.